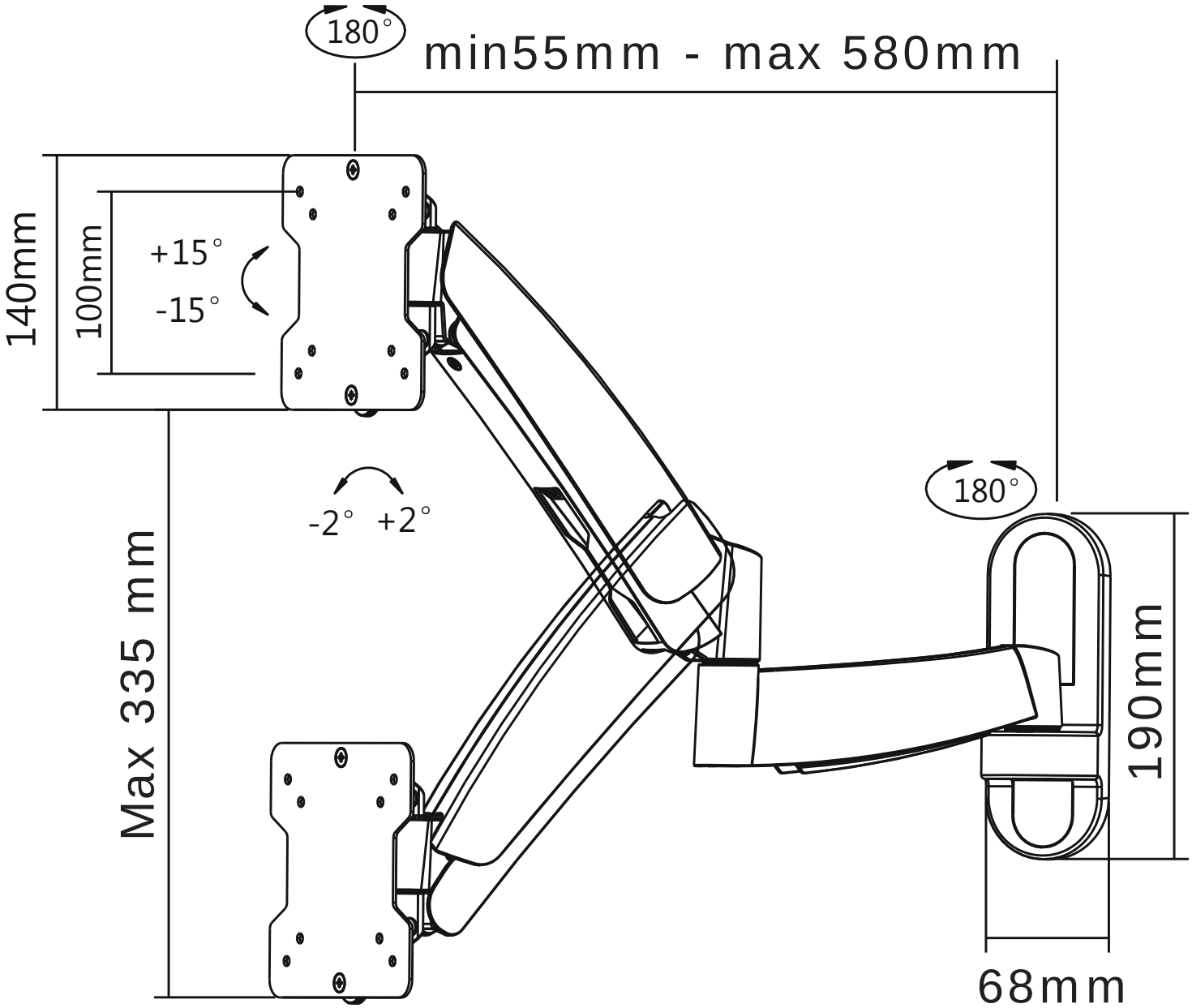
180°
min55mm - max 580mm
140mm
100mm
+15°
-15°
-2° +2°
Max 335 mm
180°
190mm
68mm