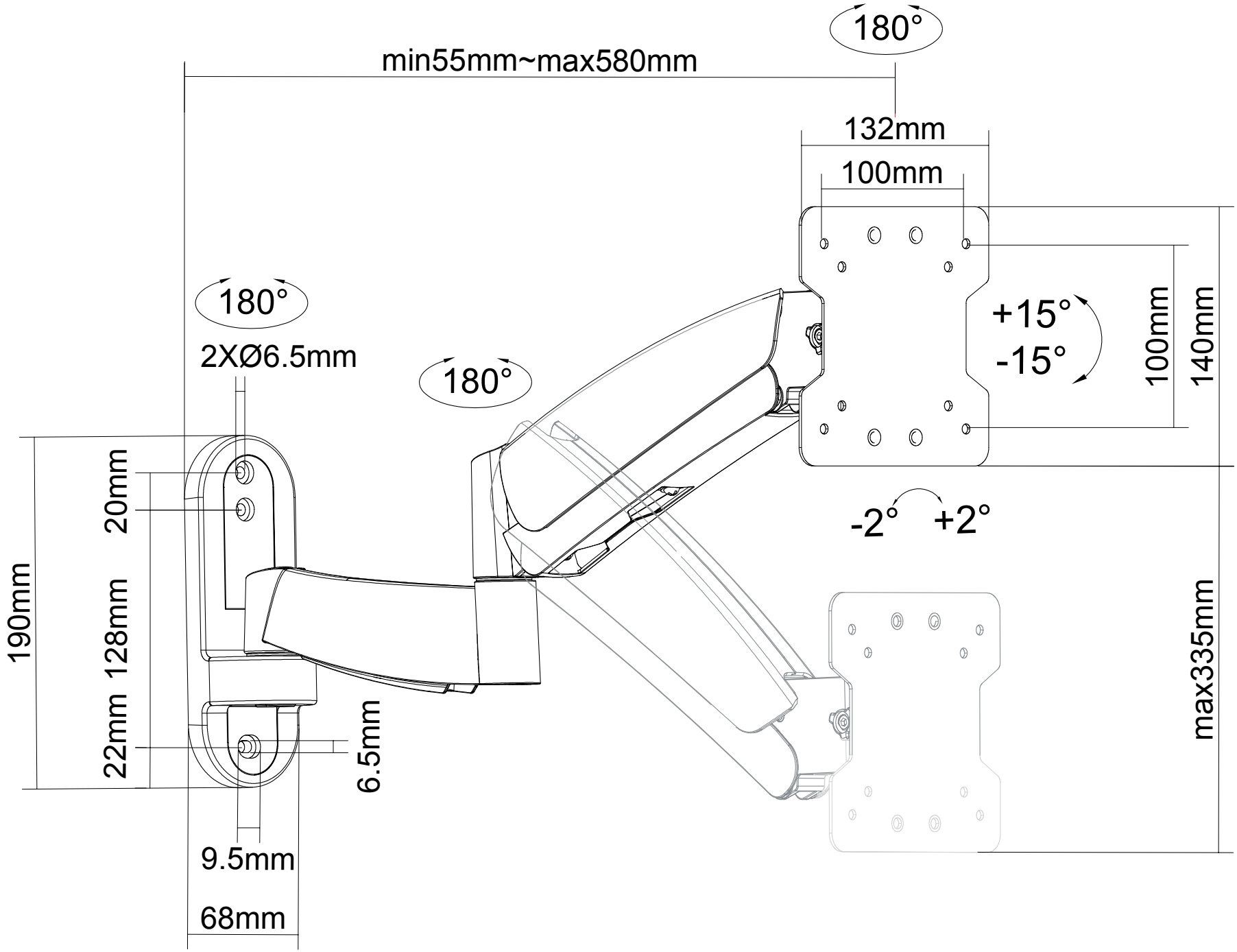
180°
min55mm~max580mm
132mm
100mm
180°
2XØ6.5mm
180°
+15°
-15°
100mm
140mm
20mm
190mm
128mm
22mm
6.5mm
-2°
+2°
max335mm
9.5mm
68mm