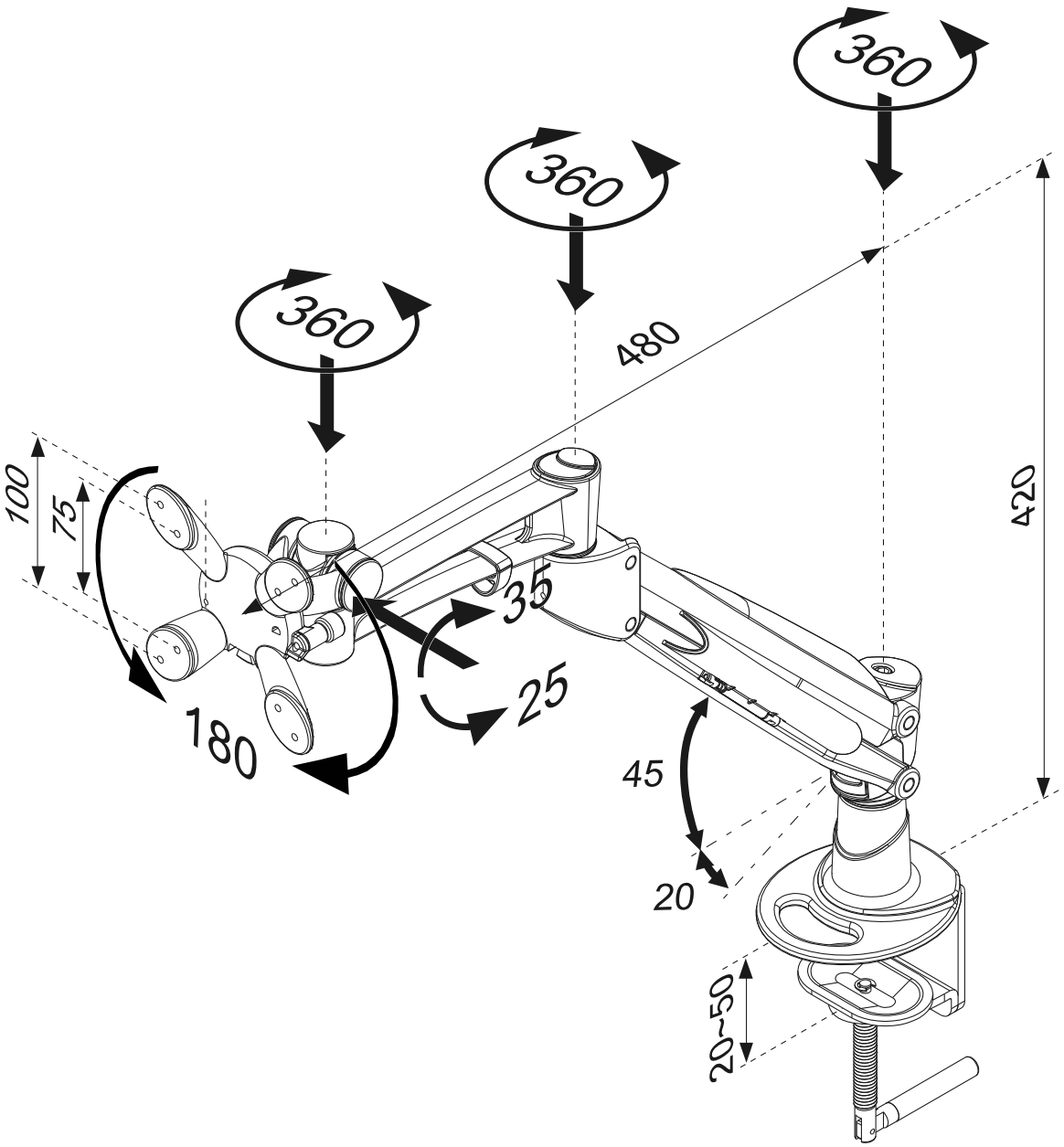

Neomounts

Measuring unit: mm