DATASHEET - M22-L-R



Indicator light, RMQ-Titan, Flush, Red

Part no.	**M22-L-R**
Catalog No.	**216772**
Alternate Catalog No.	**M22-L-RQ**
EL-Nummer (Norway)	**4355333**

Powering Business Worldwide

Delivery program

Product range			RMQ-Titan
Basic function			Indicator lights
Mounting hole diameter	∅	mm	22.5
Single unit/Complete unit			Single unit
Design			Flush
Colour			
Lens			Red
Lens			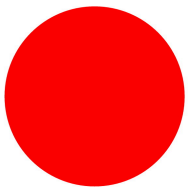
Degree of Protection			IP66, IP67, IP69
Connection to SmartWire-DT			yes with SWD-RMQ connections
Front dimensions			29,7

Technical data

General

Standards			IEC/EN 60947 VDE 0660
Climatic proofing			Damp heat, constant, to IEC 60068-2-78 Damp heat, cyclic, to IEC 60068-2-30
Degree of Protection			IP66, IP67, IP69
Ambient temperature			
Open		°C	-25 - +70
Mounting position			As required
Mechanical shock resistance		g	30 Shock duration 11 ms Sinusoidal according to IEC 60068-2-27
Terminal capacities		mm^2	
Solid		mm^2	0.5 - 1.5
Stranded		mm^2	0.5 - 1.5
shipping classification			DNV GL LR
			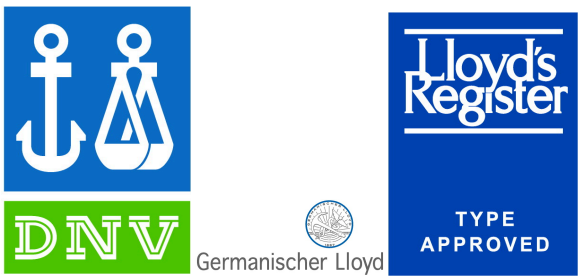

Contacts

Rated impulse withstand voltage	U_{imp}	V AC	4000
Rated insulation voltage	U_i	V	250

Overvoltage category/pollution degree			III/3

Design verification as per IEC/EN 61439

Technical data for design verification			
Rated operational current for specified heat dissipation	I_n	A	0
Heat dissipation per pole, current-dependent	P_{vid}	W	0
Equipment heat dissipation, current-dependent	P_{vid}	W	0
Static heat dissipation, non-current-dependent	P_{vs}	W	0
Heat dissipation capacity	P_{diss}	W	0
Operating ambient temperature min.		°C	-25
Operating ambient temperature max.		°C	70
IEC/EN 61439 design verification			
10.2 Strength of materials and parts			
10.2.2 Corrosion resistance			Meets the product standard's requirements.
10.2.3.1 Verification of thermal stability of enclosures			Meets the product standard's requirements.
10.2.3.2 Verification of resistance of insulating materials to normal heat			Meets the product standard's requirements.
10.2.3.3 Verification of resistance of insulating materials to abnormal heat and fire due to internal electric effects			Meets the product standard's requirements.
10.2.4 Resistance to ultra-violet (UV) radiation			Please enquire
10.2.5 Lifting			Does not apply, since the entire switchgear needs to be evaluated.
10.2.6 Mechanical impact			Does not apply, since the entire switchgear needs to be evaluated.
10.2.7 Inscriptions			Meets the product standard's requirements.
10.3 Degree of protection of ASSEMBLIES			Does not apply, since the entire switchgear needs to be evaluated.
10.4 Clearances and creepage distances			Meets the product standard's requirements.
10.5 Protection against electric shock			Does not apply, since the entire switchgear needs to be evaluated.
10.6 Incorporation of switching devices and components			Does not apply, since the entire switchgear needs to be evaluated.
10.7 Internal electrical circuits and connections			Is the panel builder's responsibility.
10.8 Connections for external conductors			Is the panel builder's responsibility.
10.9 Insulation properties			
10.9.2 Power-frequency electric strength			Is the panel builder's responsibility.
10.9.3 Impulse withstand voltage			Is the panel builder's responsibility.
10.9.4 Testing of enclosures made of insulating material			Is the panel builder's responsibility.
10.10 Temperature rise			Not applicable.
10.11 Short-circuit rating			Is the panel builder's responsibility. The specifications for the switchgear must be observed.
10.12 Electromagnetic compatibility			Is the panel builder's responsibility. The specifications for the switchgear must be observed.
10.13 Mechanical function			The device meets the requirements, provided the information in the instruction leaflet (IL) is observed.

Technical data ETIM 7.0

Low-voltage industrial components (EG000017) / Front element for indicator light (EC000223)			
Electric engineering, automation, process control engineering / Low-voltage switch technology / Command and alarm device / Front element for warning lights (ecl@ss10.0.1-27-37-12-11 [AKF029014])			
Suitable for number of built-in signal lights			1
Colour lens			Red
Construction type lens			Round
Hole diameter		mm	22.5
Width opening		mm	0
Height opening		mm	0
With front ring			Yes
Material front ring			Plastic
Colour front ring			Chrome
Type of lens			Flat
Degree of protection (IP), front side			IP67/IP69K

Approvals

Product Standards	IEC/EN 60947-5; UL 508; CSA-C22.2 No. 14-05; CSA-C22.2 No. 94-91; CE marking
UL File No.	E29184
UL Category Control No.	NKCR
CSA File No.	012528
CSA Class No.	3211-03
North America Certification	UL listed, CSA certified
Degree of Protection	UL/CSA Type 3R, 4X, 12, 13

Dimensions

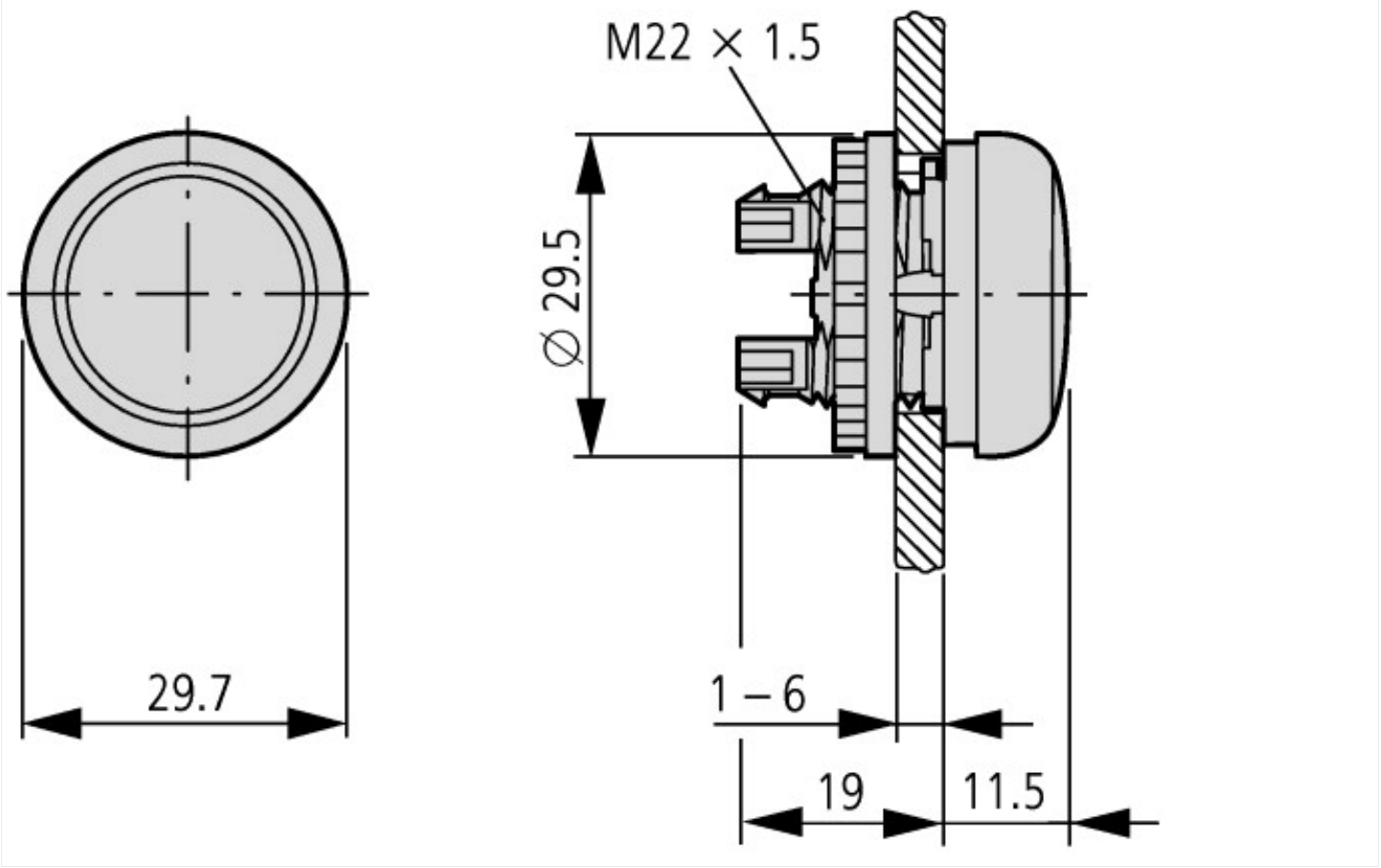

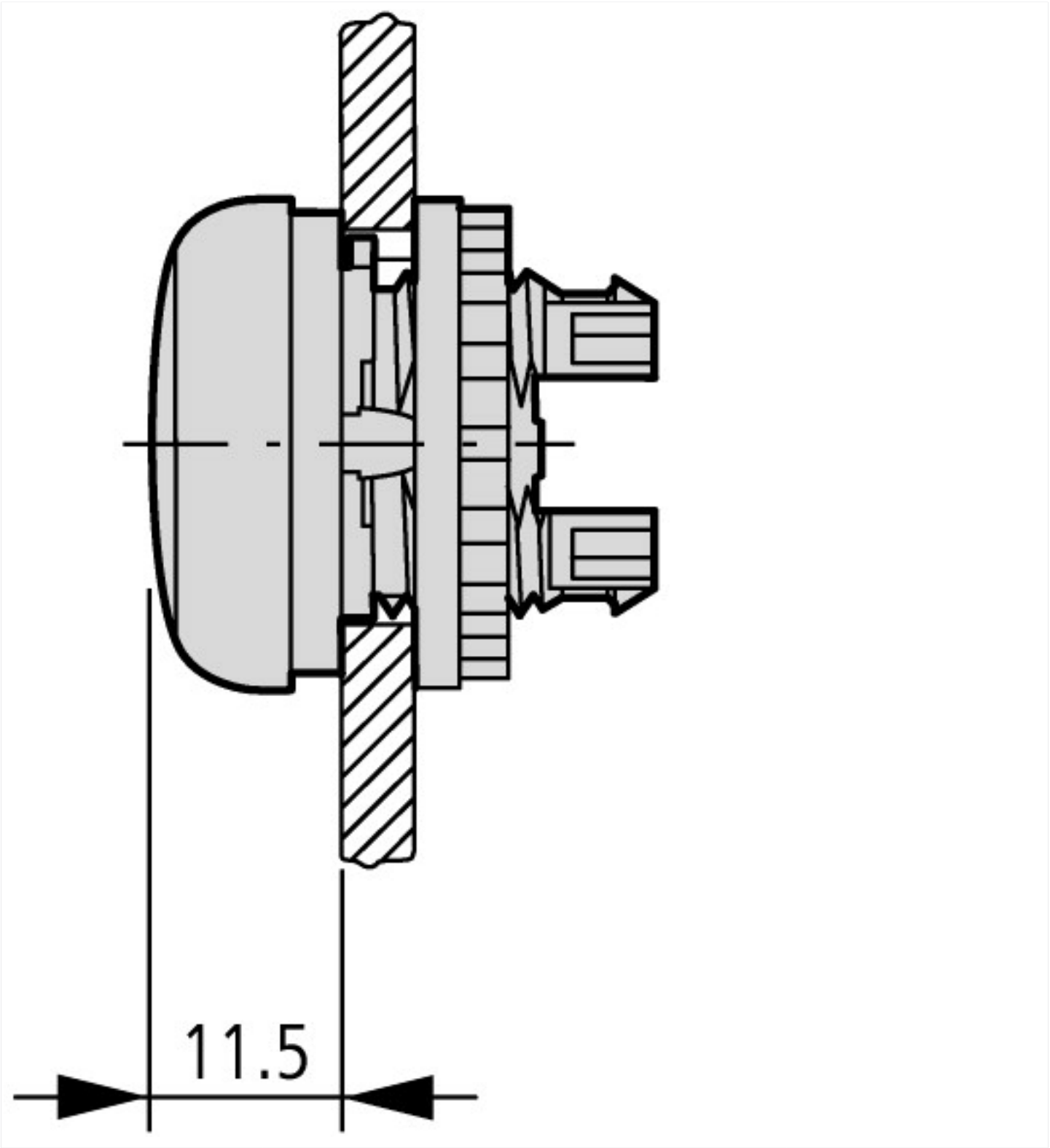
11.5

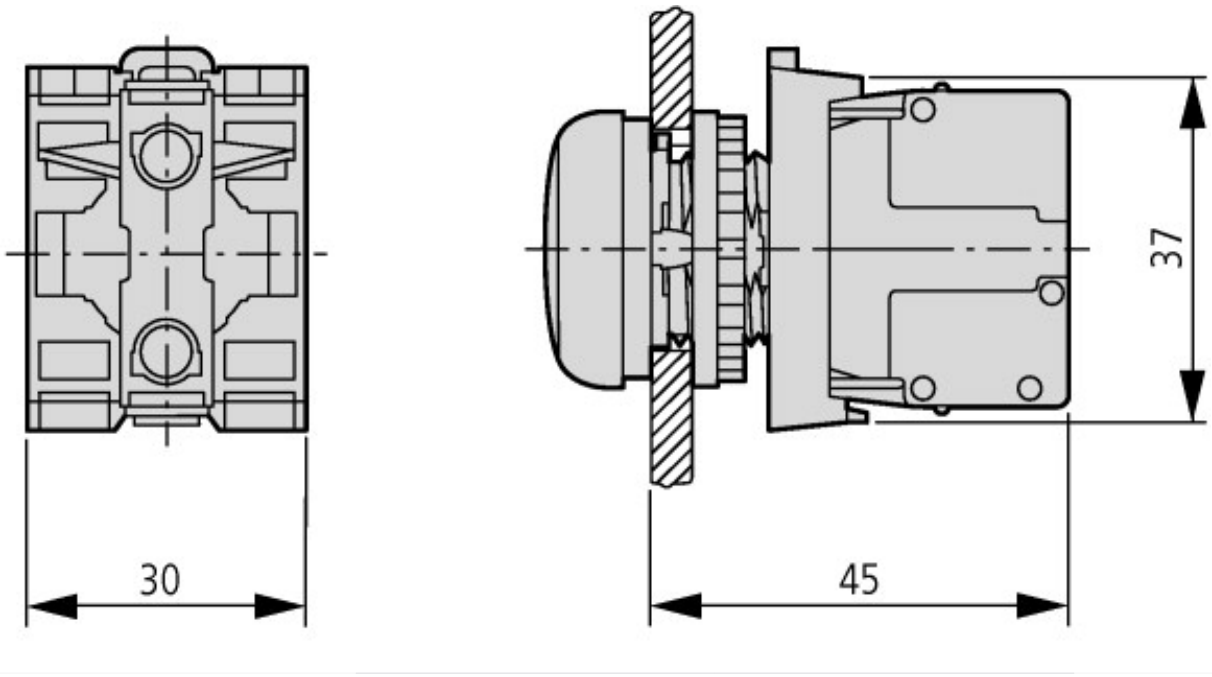

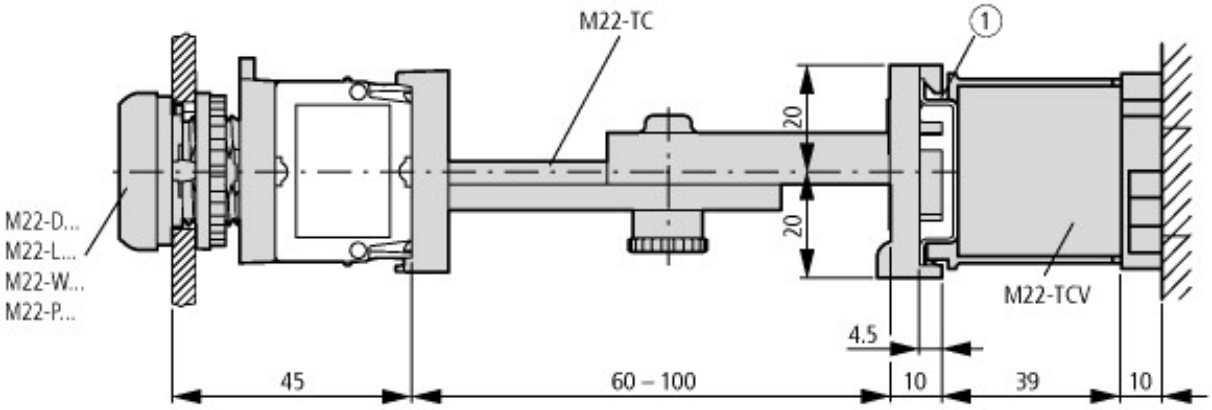

Pushbuttons and indicator lights with M22-TC telescopic clip and M22-TCV extension
① Top-hat rail to IEC/EN 60715

Additional product information (links)

IL04716002Z (AWA1160-1745) RMQ-Titan System	
IL04716002Z (AWA1160-1745) RMQ-Titan System	https://es-assets.eaton.com/DOCUMENTATION/AWA_INSTRUCTIONS/IL04716002Z2020_09.pdf

© 10/2020 by Eaton Industries GmbH