Thinking of you
Electrolux

EGD6576NOK **EN** HOB USER MANUAL

CONTENTS

1. SAFETY INFORMATION....3
2. SAFETY INSTRUCTIONS....4
3. PRODUCT DESCRIPTION....7
4. DAILY USE....9
5. HINTS AND TIPS....12
6. CARE AND CLEANING....14
7. TROUBLESHOOTING....15
8. INSTALLATION....18
9. TECHNICAL INFORMATION....22

WE'RE THINKING OF YOU

Thank you for purchasing an Electrolux appliance. You've chosen a product that brings with it decades of professional experience and innovation. Ingenious and stylish, it has been designed with you in mind. So whenever you use it, you can be safe in the knowledge that you'll get great results every time.
Welcome to Electrolux.
Visit our website for:



Get usage advice, brochures, trouble shooter, service information:
www.electrolux.com



Register your product for better service:
www.registerelectrolux.com



Buy Accessories, Consumables and Original spare parts for your appliance:
www.electrolux.com/shop

CUSTOMER CARE AND SERVICE

Always use original spare parts.
When contacting our Authorised Service Centre, ensure that you have the following data available: Model, PNC, Serial Number.
The information can be found on the rating plate.

Warning / Caution-Safety information

General information and tips

Environmental information

Subject to change without notice.

1. ⚠ SAFETY INFORMATION

Before the installation and use of the appliance, carefully read the supplied instructions. The manufacturer is not responsible if an incorrect installation and use causes injuries and damages. Always keep the instructions with the appliance for future reference.

1.1 Children and vulnerable people safety

- This appliance can be used by children aged from 8 years and above and persons with reduced physical, sensory or mental capabilities or lack of experience and knowledge if they have been given supervision or instruction concerning use of the appliance in a safe way and understand the hazards involved.
- Do not let children play with the appliance.
- Keep all packaging away from children.
- Keep children and pets away from the appliance when it operates or when it cools down. Accessible parts are hot.
- If the appliance has a child safety device, we recommend you activate it.
- Cleaning and user maintenance shall not be made by children without supervision.
- Children of less than 3 years should be kept away unless continuously supervised.

1.2 General Safety

- The appliance and its accessible parts become hot during use. Do not touch the heating elements.
- Do not operate the appliance by means of an external timer or separate remote-control system.
- Unattended cooking on a hob with fat or oil can be dangerous and may result in fire.
- Never try to extinguish a fire with water, but switch off the appliance and then cover flame e.g. with a lid or a fire blanket.
- Do not store items on the cooking surfaces.

- Metallic objects such as knives, forks, spoons and lids should not be placed on the hob surface since they can get hot.
- Do not use a steam cleaner to clean the appliance.
- After use, switch off the hob element by its control and do not rely on the pan detector.
- If the glass ceramic surface/ glass surface is cracked, switch off the appliance to avoid the possibility of electric shock
- In case of hotplate glass breakage:
  - shut immediately off all burners and any electrical heating element and isolate the appliance from the power supply,
  - do not touch the appliance surface,
  - do not use the appliance.
- If the supply cord is damaged, it must be replaced by the manufacturer, an authorized Service or similarly qualified persons in order to avoid a hazard.
- Where the appliance is directly connected to the power supply, an all-pole isolating switch with a contact gap is required. Complete disconnection in compliance with the conditions specified in overvoltage category III must be guaranteed. The earth cable is excluded from this.
- When you route the mains cable, make sure that the cable doesn't come into direct contact (for example using insulating sleeving) with parts that can reach temperatures of more than 50°C above room temperature.

2. SAFETY INSTRUCTIONS

2.1 Installation

WARNING!
Only a qualified person must install this appliance.

- Remove all the packaging.
- Do not install or use a damaged appliance.
- Obey the installation instruction supplied with the appliance.
- Keep the minimum distance from the other appliances and units.
- Always be careful when you move the appliance because it is heavy. Always wear safety gloves.
- Seal the cut surfaces with a sealant to prevent moisture to cause swelling.
- Protect the bottom of the appliance from steam and moisture.
- Do not install the appliance adjacent to a door or under a window. This

prevents hot cookware to fall from the appliance when the door or the window is opened.
- If the appliance is installed above drawers make sure that the space, between the bottom of the appliance and the upper drawer, is sufficient for air circulation.
- The bottom of the appliance can get hot. Make sure to install a non-combustile separation panel under the appliance to prevent access to the bottom.
- Make sure that the ventilation space of 2 mm, between the worktop and the front of the below unit, is free. The warranty does not cover damages caused by the lack of an adequate ventilation space.

2.2 Electrical Connection

WARNING!
Risk of fire and electrical shock.

- All electrical connections should be made by a qualified electrician.
- The appliance must be earthed.
- Before carrying out any operation make sure that the appliance is disconnected from the power supply.
- Make sure that the electrical information on the rating plate agrees with the power supply. If not contact an electrician.
- Make sure the appliance is installed correctly. Loose and incorrect electricity mains cable or plug (if applicable) can make the terminal become too hot.
- Use the correct electricity mains cable.
- Do not let the electricity mains cable tangle.
- Make sure that a shock protection is installed.
- Use the strain relief clamp on the cable.
- Make sure the mains cable or plug (if applicable) does not touch the hot appliance or hot cookware, when you connect the appliance to the near sockets
- Do not use multi-plug adapters and extension cables.
- Make sure not to cause damage to the mains plug (if applicable) or to the mains cable. Contact an Authorised Service Centre or an electrician to change a damaged mains cable.
- The shock protection of live and insulated parts must be fastened in such a way that it cannot be removed without tools.
- Connect the mains plug to the mains socket only at the end of the installation. Make sure that there is access to the mains plug after the installation.
- If the mains socket is loose, do not connect the mains plug.
- Do not pull the mains cable to disconnect the appliance. Always pull the mains plug.
- Use only correct isolation devices: line protecting cut-outs, fuses (screw type fuses removed from the holder), earth leakage trips and contactors.
- The electrical installation must have an isolation device which lets you disconnect the appliance from the mains at all poles. The isolation device must have a contact opening width of minimum 3 mm.

2.3 Gas connection

- All gas connections should be made by a qualified person.
- Before installation, make sure that the local distribution conditions (nature of the gas and gas pressure) and the adjustment of the appliance are compatible.
- Make sure that there is air circulation around the appliance.
- The information about the gas supply is on the rating plate.
- This appliance is not connected to a device, which evacuates the products of combustion. Make sure to connect the appliance according to current installation regulations. Pay attention to requirements regarding adequate ventilation.

2.4 Use

WARNING!
Risk of injury, burns and electrical shock.

- Remove all the packaging, labelling and protective film (if applicable) before first use.
- Use this appliance in a household environment.
- Do not change the specification of this appliance.
- Make sure that the ventilation openings are not blocked.
- Do not let the appliance stay unattended during operation.
- Set the cooking zone to “off” after each use.
- Do not rely on the pan detector.
- Do not put cutlery or saucepan lids on the cooking zones. They can become hot.
- Do not operate the appliance with wet hands or when it has contact with water.
- Do not use the appliance as a work surface or as a storage surface.
- If the surface of the appliance is cracked, disconnect immediately the appliance from the power supply. This to prevent an electrical shock.
- Users with a pacemaker must keep a distance of minimum 30 cm from the induction cooking zones when the appliance is in operation.
- When you place food into hot oil, it may splash.



WARNING!
Risk of fire and explosion

- Fats and oil when heated can release flammable vapours. Keep flames or heated objects away from fats and oils when you cook with them.
- The vapours that very hot oil releases can cause spontaneous combustion.
- Used oil, that can contain food remnants, can cause fire at a lower temperature than oil used for the first time.
- Do not put flammable products or items that are wet with flammable products in, near or on the appliance.



WARNING!
Risk of damage to the appliance.

- Do not keep hot cookware on the control panel.
- Do not let cookware to boil dry.
- Be careful not to let objects or cookware fall on the appliance. The surface can be damaged.
- Do not activate the cooking zones with empty cookware or without cookware.
- Do not put aluminium foil on the appliance.
- Cookware made of cast iron, aluminium or with a damaged bottom can cause scratches on the glass / glass ceramic. Always lift these objects up when you have to move them on the cooking surface.
- Use only stable cookware with the correct shape and diameter larger than the dimensions of the burners.
- Make sure the flame does not go out when you quickly turn the knob from the maximum to the minimum position.
- Use only the accessories supplied with the appliance.
- Do not install a flame diffuser on the burner.
- The use of a gas cooking appliance results in the production of heat and moisture. Provide good ventilation in the room where the appliance is installed.
- Prolonged intensive use of the appliance may call for additional ventilation, for example opening of a window, or more effective ventilation, for example increasing the level of mechanical ventilation where present.
- This appliance is for cooking purposes only. It must not be used for other purposes, for example room heating.

2.5 Care and cleaning

- Clean regularly the appliance to prevent the deterioration of the surface material.
- Deactivate the appliance and let it cool down before you clean it.
- Disconnect the appliance from the electrical supply before maintenance.
- Do not use water spray and steam to clean the appliance.
- Clean the appliance with a moist soft cloth. Only use neutral detergents. Do not use abrasive products, abrasive cleaning pads, solvents or metal objects.
- Do not clean the burners in the dishwasher.

2.6 Disposal

WARNING!
Risk of injury or suffocation.

- Contact your municipal authority for information on how to discard the appliance correctly.
- Disconnect the appliance from the mains supply.
- Cut off the mains cable and discard it.
- Flat the external gas pipes.

3. PRODUCT DESCRIPTION

3.1 Cooking surface layout

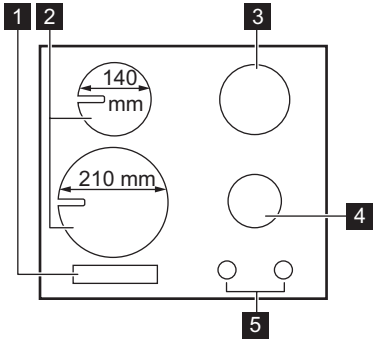

1 Control panel
2 Induction cooking zones
3 Rapid burner
4 Semi-rapid burner
5 Control knobs

3.2 Control knob

Symbol	Description
●	no gas supply / off position

Symbol	Description
	ignition position / maximum gas supply
	minimum gas supply

3.3 Control panel layout

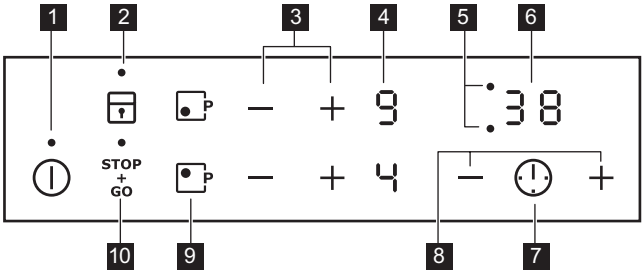

Use the sensor fields to operate the appliance. The displays, indicators and sounds tell which functions operate.

	Sensor field	Function	Comment
1	⏻	ON / OFF	To activate and deactivate the hob.
2	🔒	Lock / The Child Safety Device	To lock / unlock the control panel.
3	+ / −	-	To set a heat setting.
4	-	Heat setting display	To show the heat setting.
5	-	Timer indicators of cooking zones	To show for which zone you set the time.
6	-	Timer display	To show the time in minutes.
7	🕒	-	To select the cooking zone.
8	+ / −	-	To increase or decrease the time.
9	P	Power function	To activate and deactivate the function.
10	STOP + GO	STOP+GO	To activate and deactivate the function.

3.4 Heat setting displays

Display	Description
0	The cooking zone is deactivated.
1 - 9	The cooking zone operates.
u	STOP+GO function operates.
A	Automatic Heat Up function operates.
P	Power function operates.
E + digit	There is a malfunction.
H	A cooking zone is still hot (residual heat).
L	Lock / The Child Safety Device function operates.
F	Incorrect or too small cookware or no cookware on the cooking zone.
-	Automatic Switch Off function operates.

3.5 Residual heat indicator

WARNING!
[H] There is a risk of burns from residual heat.

The induction cooking zones make the heat necessary for cooking process directly in the bottom of the cookware. The glass ceramic is heated by the heat of the cookware.

4. DAILY USE

WARNING!
Refer to Safety chapters.

4.1 Gas burners

Burner overview

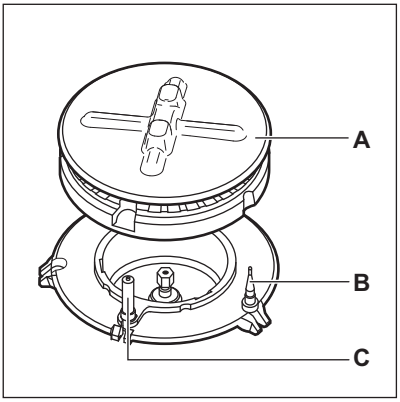

A) Burner cap and crown
B) Thermocouple
C) Ignition candle

Ignition of the burner

Always light the burner before you put on the cookware.

WARNING!
Be very careful when you use open fire in the kitchen environment. The manufacturer declines any responsibility in case of the flame misuse.

1. Push the control knob down and turn it counterclockwise to the maximum gas supply position (⁂).
2. Keep the control knob pushed for equal or less than 10 seconds. This lets the thermocouple warm up. If not, the gas supply is interrupted.
3. Adjust the flame after it is regular.

If after some tries the burner does not light, check if the crown and its cap are in correct positions.

WARNING!
Do not keep the control knob pushed for more than 15 seconds. If the burner does not light after 15 seconds, release the control knob, turn it into off position and try to light the burner again after minimum 1 minute.

CAUTION!
In the absence of electricity you can ignite the burner without electrical device; in this case approach the burner with a flame, turn the control knob counter-clockwise to maximum gas supply position and push it down. Keep the control knob pushed for equal or less than 10 seconds to let the thermocouple warm up.

If the burner accidentally goes out, turn the control knob to the off position and try to light the burner again after minimum 1 minute.

The spark generator can start automatically when you switch on the mains, after installation or a power cut. It is normal.

Turning the burner off

To put the flame out, turn the knob to the off position ●.

WARNING!
Always turn the flame down or switch it off before you remove the pans from the burner.

4.2 Induction cooking zones

Activating and deactivating

Touch ⏻ for 1 second to activate or deactivate the hob.

Automatic Switch Off

The function deactivates the hob automatically if:

- All cooking zones are deactivated.
- You do not set the heat setting after you activate the hob.
- You spill something or put something on the control panel for more than 10 seconds (a pan, a cloth, etc.). An acoustic signal sounds and the hob deactivates. Remove the object or clean the control panel.
- The hob gets too hot (e.g. when, a saucepan boils dry). Let the cooking zone cool down before you use the hob again.
- You use incorrect cookware. The symbol F comes on and the cooking zone deactivates automatically after 2 minutes.
- You do not deactivate a cooking zone or change the heat setting. After some time - comes on and the hob deactivates. See below.

The relation between heat setting and times of the function:

- u, **1** - **2**— 6 hours
- **3** - **4** — 5 hours
- **5** — 4 hours
- **6** - **9** — 1.5 hours

The heat setting

Touch + to increase the heat setting.
Touch — to decrease the heat setting.
Touch + and — at the same time to deactivate the cooking zone.

Automatic Heat Up

If you activate this function you can get a necessary heat setting in a shorter time. The function sets the highest heat setting for some time and then decreases to the correct heat setting.

To activate the function the cooking zone must be cold.

To activate the function for a cooking zone: touch P (P comes on).
Immediately touch + (A comes on).
Immediately touch — until the correct heat setting comes on. After 3 seconds A comes on.

To deactivate the function: touch +.

Power function

This function makes more power available to the induction cooking zones. The function can be activated for the induction cooking zone only for a limited period of time. After this time the induction cooking zone automatically sets back to the highest heat setting.

To activate the function for a cooking zone: touch P. P comes on.

To deactivate the function: touch P or —.

Timer

Count Down Timer
You can use this function to set how long the cooking zone operates for only this one time.

First set the cooking zone then set the function. You can set the heat setting before or after you set the function.

To set the cooking zone: touch ⏲ again and again until the indicator of a necessary cooking zone comes on.

To activate the function or change the time: touch + or — of the timer to set the time (**00 - 99** minutes). When the indicator of the cooking zone starts to flash slowly the time counts down.

To see the remaining time: set the cooking zone with ⏲. The indicator of the cooking zone starts to flash quickly. The display shows the remaining time.

To deactivate the function: set the cooking zone with ⏲ and touch —. The remaining time counts back to **00**. The indicator of the cooking zone goes out.

When the time comes to an end, the sound operates and **00** flashes. The cooking zone deactivates.

To stop the sound: touch ⏲.

Minute Minder
You can use this function as a **Minute Minder** when the hob is activated and the cooking zones do not operate (the heat setting display shows 0).

To activate the function: touch ⏲. Touch + or — of the timer to set the time. When the time comes to an end, the sound operates and **00** flashes.

To stop the sound: touch ⏲.

The function has no effect on the operation of the cooking zones.

STOP+GO

This function sets all cooking zones that operate to the lowest heat setting.

When the function operates, you cannot change the heat setting.

The function does not stop the timer functions.

To activate the function: touch STOP+GO. u comes on.

To deactivate the function: touch STOP+GO. The previous heat setting comes on.

Lock

You can lock the control panel while cooking zones operate. It prevents an accidental change of the heat setting.

Set the heat setting first.

To activate the function: touch 🔒. L comes on for 4 seconds. The Timer stays on.

To deactivate the function: touch 🔒. The previous heat setting comes on.

When you deactivate the hob, you also deactivate this function.

The Child Safety Device

This function prevents an accidental operation of the hob.

To activate the function: activate the hob with ⏻. Do not set the heat setting. Touch 🔒 for 4 seconds. L comes on. Deactivate the hob with ⏻.

To deactivate the function: activate the hob with ⏻. Do not set the heat setting. Touch 🔒 for 4 seconds. 0 comes on. Deactivate the hob with ⏻.

To override the function for only one cooking time: activate the hob with ⏻. L comes on. Touch 🔒 for 4 seconds. **Set the heat setting in 10 seconds.** You can operate the hob. When you deactivate the hob with ⏻ the function operates again.

Power management function

- All cooking zones are connected to one phase. See the illustration.
- The phase has a maximum electricity loading of 3700 W.
- The function divides the power between cooking zones.

- The function activates when the total electricity loading of the cooking zones exceeds 3700 W.
- The function decreases the power to the other cooking zones.
- The heat setting display of the reduced zones changes between two levels.

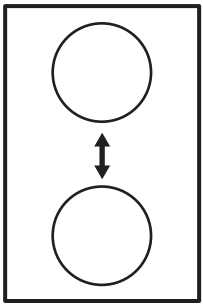

5. HINTS AND TIPS

WARNING!
Refer to Safety chapters.

5.1 Cookware

Electric:

For induction cooking zones a strong electro-magnetic field creates the heat in the cookware very quickly.

Use the induction cooking zones with correct cookware.

Cookware material

- **correct:** cast iron, steel, enamelled steel, stainless steel, the bottom made of multi-layer (with correct mark from a manufacturer).
- **not correct:** aluminium, copper, brass, glass, ceramic, porcelain.

Cookware is correct for an induction hob if:

- some water boils very quickly on a zone set to the highest heat setting.
- a magnet pulls on to the bottom of the cookware.

The bottom of the cookware must be as thick and flat as possible.

Cookware dimensions

Induction cooking zones adapt to the dimension of the bottom of the cookware automatically to some limit.

The cooking zone efficiency is related to the diameter of the cookware. The cookware with a smaller diameter than the minimum receives only a part of the power generated by the cooking zone.

Refer to “Technical information” chapter.

CAUTION!
Do not use cast iron pans, potstones, earthenware, grill or toaster plates.

Gas:

WARNING!
Do not put the same pan on two burners.

WARNING!
Do not put unstable or damaged pots on the burners to prevent from spill and injury.

CAUTION!
Make sure that the bottoms of pots do not stand above the control knobs, otherwise the flame heats the control knobs up.

CAUTION!
Make sure that pot handles are not above the front edge of the cooktop.

CAUTION!
Make sure that the pots are placed centrally on the burners in order to get maximum stability and to get lower gas consumption.

CAUTION!
Liquids spilt during cooking can cause the glass to break.

5.2 Diameters of cookware

Use cookware with diameters applicable to the size of burners.

Burner	Diameter of cookware (mm)
Rapid	180 - 220
Semi-rapid	120 - 220

5.3 Energy saving

- If it is possible, always put the lids on the cookware.
- Put cookware on a cooking zone before you start it.
- Use the residual heat to keep the food warm or to melt it.
- When the liquid starts to boil, turn down the flame to barely simmer the liquid.

5.4 The noises during operation

If you can hear:

- crack noise: cookware is made of different materials (sandwich construction).
- whistle sound: you the cooking zone with high power level and the cookware is made of different materials (sandwich construction).
- humming: you use high power level.
- clicking: electric switching occurs.
- hissing, buzzing: the fan operates.

The noises are normal and do not refer to hob malfunction.

5.5 Examples of cooking applications

The relation between the heat setting and the cooking zone consumption of power is not linear. When you increase the heat setting, it is not proportional to the increase of the cooking zone consumption of power. It means that the cooking zone with the medium heat setting uses less than a half of its power.

The data in the table is for guidance only.

Heat setting	Use to:	Time (min)	Hints
⏻ - 1	Keep cooked food warm.	as necessary	Put a lid on the cookware.
1 - 2	Hollandaise sauce, melt: butter, chocolate, gelatine.	5 - 25	Mix from time to time.
1 - 2	Solidify: fluffy omelettes, baked eggs.	10 - 40	Cook with a lid on.
2 - 3	Simmer rice and milkbased dishes, heating up ready-cooked meals.	25 - 50	Add the minimum twice as much liquid as rice, mix milk dishes part procedure through.

Heat setting	Use to:	Time (min)	Hints
3 - 4	Steam vegetables, fish, meat.	20 - 45	Add some tablespoons of liquid.
4 - 5	Steam potatoes.	20 - 60	Use max. ¼ l water for 750 g of potatoes.
4 - 5	Cook larger quantities of food, stews and soups.	60 - 150	Up to 3 l liquid plus ingredients.
6 - 7	Gentle fry: escalope, veal cordon bleu, cutlets, rissoles, sausages, liver, roux, eggs, pancakes, doughnuts.	as necessary	Turn halfway through.
7 - 8	Heavy fry, hash browns, loin steaks, steaks.	5 - 15	Turn halfway through.
9	Boil water, cook pasta, sear meat (goulash, pot roast), deep-fry chips.		
	Boil large quantities of water. Power function is activated.		

6. CARE AND CLEANING

WARNING!
Refer to Safety chapters.

6.1 General information

- Clean the hob after each use.
- Always use cookware with clean bottom.
- Scratches or dark stains on the surface have no effect on how the hob operates.
- Use a special cleaner applicable for the surface of the hob.
- Use a special scraper for the glass.

WARNING!
Do not use knives, scrapers or similar instruments to clean the surface of the glass or between the rims of the burners and the frame (if applicable).

- Wash stainless steel parts with water, and then dry them with a soft cloth.

6.2 Pan supports

The pan supports are not resistant to washing in a dishwasher. They must be washed by hand.

1. Remove the pan supports to easily clean the hob.

Be very careful when you replace the pan supports to prevent the hob top from damage.

2. The enamel coating occasionally can have rough edges, so be careful when you wash the pan supports by hand and dry them. If necessary, remove stubborn stains with a paste cleaner.
3. After you clean the pan supports, make sure that they are in correct positions.
4. For the burners to operate correctly make sure that the arms of the pan supports are aligned with the centre of the burner.

6.3 Cleaning the hob

- **Remove immediately:** melted plastic, plastic foil, and food with sugar. If not,

the dirt can cause damage to the hob. Put the special scraper on the glass surface at an acute angle and move the blade on the surface.

- **Remove when the hob is sufficiently cool:** limescale rings, water rings, fat stains, shiny metallic discoloration. Clean the hob with a moist cloth and some detergent. After cleaning, rub the hob dry with a soft cloth.
- To clean the enamelled parts, cap and crown, wash them with warm soapy water and dry them carefully before you put them back.

6.4 Cleaning the spark plug

This feature is obtained through a ceramic ignition candle with a metal electrode. Keep these components well clean to prevent difficult lighting and check that the burner crown holes are not obstructed.

6.5 Periodic maintenance

Speak to your local Authorised Service Centre periodically to check the conditions of the gas supply pipe and the pressure adjuster, if fitted.

7. TROUBLESHOOTING

WARNING!
Refer to Safety chapters.

7.1 What to do if...

Problem	Possible cause	Remedy
You cannot activate or operate the hob.	The hob is not connected to an electrical supply or it is connected incorrectly.	Check if the hob is correctly connected to the electrical supply. Refer to the connection diagram.
	The fuse is released.	Make sure that the fuse is the cause of the malfunction. If the fuse releases again and again, contact a qualified electrician.
		Activate the hob again and set the heat setting in less than 10 seconds.
	You touched 2 or more sensor fields at the same time.	Touch only one sensor field.
	STOP+GO function operates.	Refer to "Daily use" chapter.
	There is water or fat stains on the control panel.	Clean the control panel.
An acoustic signal sounds and the hob deactivates. An acoustic signal sounds when the hob is deactivated.	You put something on one or more sensor fields.	Remove the object from the sensor fields.

Problem	Possible cause	Remedy
The hob deactivates.	You put something on the sensor field ⏻.	Remove the object from the sensor field.
Residual heat indicator does not come on.	The zone is not hot because it operated only for a short time.	If the zone operated sufficiently long to be hot, speak to an Authorised Service Centre.
Automatic Heat Up function does not operate.	The zone is hot.	Let the zone become sufficiently cool.
	The highest heat setting is set.	The highest heat setting has the same power as the function.
The heat setting changes between two levels.	Power management function is activated.	Refer to "Daily use" chapter.
The sensor fields become hot.	The cookware is too large or you put it too near to the controls.	Put large cookware on the rear zones if possible.
[-] comes on.	Automatic Switch Off operates.	Deactivate the hob and activate it again.
[L] comes on.	The Child Safety Device or the Lock function operates.	Refer to "Daily use" chapter.
[F] comes on.	There is no cookware on the zone.	Put cookware on the zone.
	The cookware is incorrect.	Use the correct cookware. Refer to “Hints and tips” chapter.
	The diameter of the bottom of the cookware is too small for the zone.	Use cookware with correct dimensions. Refer to “Technical information” chapter.
[E] and a number come on.	There is an error in the hob.	Disconnect the hob from the electrical supply for some time. Disconnect the fuse from the electrical system of the house. Connect it again. If [E] comes on again, speak to an Authorised Service Centre.

Problem	Possible cause	Remedy
E4 comes on.	There is an error in the hob because a cookware boils dry. Automatic Switch Off and the overheating protection for the zones operate.	Deactivate the hob. Remove the hot cookware. After approximately 30 seconds, activate the zone again. If the cookware was the problem, the error message goes out. Residual heat indicator can stay on. Let the cookware become sufficiently cool. Check if your cookware is compatible with the hob. Refer to “Hints and tips” chapter.
There is no spark when you try to activate the spark generator.	The hob is not connected to an electrical supply or it is connected incorrectly.	Check if the hob is correctly connected to the electrical supply.
	The fuse is released.	Make sure that the fuse is the cause of the malfunction. If the fuse releases again and again, contact a qualified electrician.
	Burner cap and crown are placed incorrectly.	Place the burner cap and crown correctly.
The flame extinguishes immediately after ignition.	Thermocouple is not heated up sufficiently.	After lightning the flame, keep the knob pushed for equal or less than 10 seconds.
The flame ring is uneven.	Burner crown is blocked with food residues.	Make sure that the injector is not blocked and the burner crown is clean.

7.2 If you cannot find a solution...

If you cannot find a solution to the problem yourself, contact your dealer or an Authorised Service Centre. Give the data from the rating plate. Give also an error message that comes on.Make sure, you operated the hob correctly. If not the servicing by a service technician or dealer will not be free of charge, also during the warranty period. The instructions about the Service Centre and conditions of guarantee are in the guarantee booklet.

7.3 Labels supplied with the accessories bag

Stick the adhesive labels as indicated below:

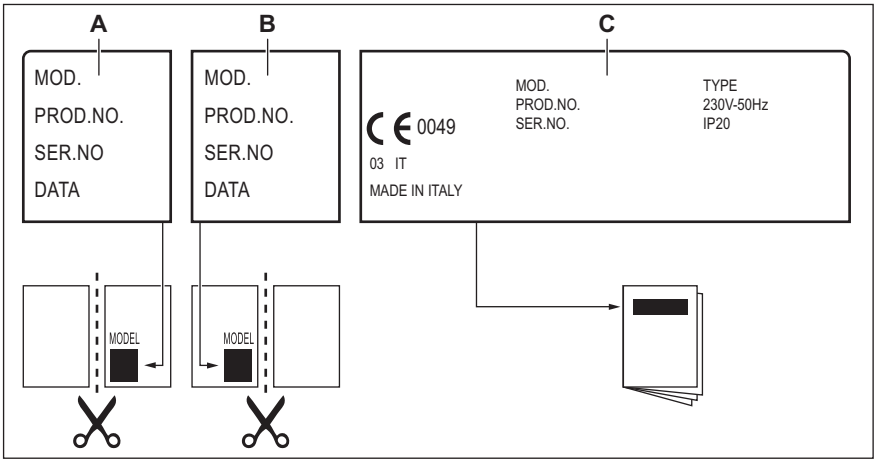

A) Stick it on Guarantee Card and send this part (if applicable).
B) Stick it on Guarantee Card and keep this part (if applicable).
C) Stick it on instruction booklet.

8. INSTALLATION

WARNING!
Refer to Safety chapters.

8.1 Before the installation

Before you install the hob, write down the information bellow from the rating plate. The rating plate is on the bottom of the hob.

Model .....
PNC .....
Serial number .....

8.2 Built-in hobs

Only use the built-in hobs after you assemble the hob into correct built-in units and work surfaces that align to the standards.

8.3 Gas Connection

WARNING!
The following instructions about installation, connection and maintenance must be carried out by qualified personnel in compliance with standards and local regulations in force.

Choose fixed connections or use a flexible pipe in stainless steel in compliance with the regulation in force. If you use flexible metallic pipes, be careful they do not come in touch with mobile parts or they are not squeezed. Also be careful when the hob is put together with an oven.

Make sure that the gas supply pressure of the appliance obeys the recommended values. The adjustable connection is fixed to the comprehensive ramp by means of a threaded nut G 1/2". Screw the parts and tighten everything with teflon tape, if necessary, to get the right direction.

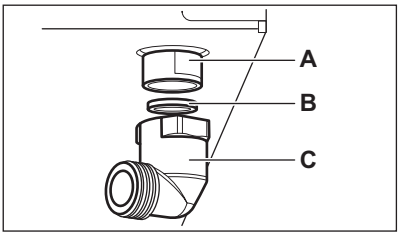

A) End of shaft with nut
B) Washer
C) Elbow (if needed)

Rigid connection:
Carry out connection by using metal rigid pipes (copper with mechanical end).

"Flexible" connection with mechanical end:
- **Natural gas**: connection carry out with a flexible pipe with mechanical end which is screwed directly on the elbow finishing the slope of the appliance.
- **Butane/Propane**: use a flexible tube, equipped with it's collars if it is worth visiting over all it's length and if the appliance runs only on butane. If the appliance runs on Propane, use a flexible pipe with suitable metal end.

Flexible nonmetal pipes connection:
If it is possible to easily control the connection in its full area, you can use a flexible pipe. Tightly attach the flexible pipe by clamps.

Liquid gas
Use the rubber pipe holder for liquid gas. Always engage the gasket. Then continue with the gas connection.

The flexible pipe is prepared for apply when:

- it can not get hot more than room temperature, higher than 30°C;
- it is no longer than 1500 mm;
- it shows no throttles;
- it is not subject to traction or torsion;
- it does not get in touch with cutting edges or corners;
- it can be easily examined in order to make sure its condition.

The control of preservation of the flexible pipe consists in checking that:

- it does not show cracks, cuts, marks of burnings on the two ends and on its full length;
- the material is not hardened, but shows its correct elasticity;
- the fastening clamps are not rusted;
- expired term is not due.

If one or more defects are visible, do not repair the pipe, but replace it.

WARNING!
When installation is complete, make sure that the seal of each pipe fitting is correct. Use a soapy solution, not a flame!

8.4 Injectors replacement

1. Remove the pan supports.
2. Remove the caps and crowns of the burner.
3. With a socket spanner 7 remove the injectors and replace them with the ones which are necessary for the type of gas you use (see table in "Technical Information" chapter).
4. Assemble the parts, follow the same procedure backwards.
5. Replace the rating plate (it is near the gas supply pipe) with the one for the new type of gas supply. You can find this plate in the package supplied with the appliance.

If the supply gas pressure is changeable or different from the necessary pressure, you must fit an applicable pressure adjuster on the gas supply pipe.

8.5 Adjustment of minimum level

To adjust the minimum level of the burners:

1. Light the burner.
2. Turn the knob on the minimum position.

3. Remove the knob.
4. With a thin screwdriver, adjust the bypass screw position (A).

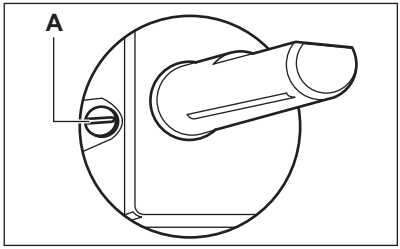

5. If you change:
   - from natural gas G20 20 mbar to liquid gas, fully tighten the bypass screw in.
   - from natural gas G20 20 mbar to natural gas G20 13 mbar (only for Russia), fully tighten the bypass screw in.
   - from liquid gas to natural gas G20 20 mbar, undo the bypass screw approximately 1/4 of a turn.
   - from natural gas G20 20 mbar to natural gas G20 13 mbar (only for Russia), undo the bypass screw approximately 1/4 of a turn.
   - from liquid gas to natural gas G20 13 mbar (only for Russia), undo the bypass screw approximately 1/2 of a turn.
   - from natural gas G20 13 mbar (only for Russia) to natural gas G20 20 mbar, tighten the bypass screw approximately 1/4 of a turn.

WARNING!
Make sure the flame does not go out when you quickly turn the knob from the maximum position to the minimum position.

8.6 Electrical connection

- Make sure that the rated voltage and type of power on the rating plate agree with the voltage and the power of the local power supply.
- This appliance is supplied with a mains cable. It has to be supplied with a correct plug which can hold the load that the rating plate rates. Make sure that you install the plug in a correct socket.
- Always use a correctly installed shockproof socket.
- Make sure that there is an access to the mains plug after the installation.
- Do not pull the mains cable to disconnect the appliance. Always pull the mains plug.
- There is a risk of fire when the appliance is in connection with an extension cable, an adapter or a multiple connection. Make sure that the ground connection agrees with the standards and regulations.
- Do not let the power cable to heat up to a temperature higher than 90° C.

Make sure that you connect the blue neutral cable to the terminal with a letter "N" on it. Connect the brown (or black) phase cable to the terminal which has a letter "L". Keep the phase cable connected at all times.

8.7 Connection cable

To replace the connection cable use only H05V2V2-F T90 or equivalent type. Make sure that the cable section is applicable to the voltage and the working temperature. The yellow / green earth wire must be approximately 2 cm longer than the brown (or black) phase wire.

8.8 Attaching the seal

1. Clean the worktop around the cut out area.
2. Attach the supplied seal stripe to the lower edge of the hob along the outer edge of the glass ceramic. Do not extend it. Make sure that the ends of the seal stripe are located in the middle of one side of the hob.
3. Add some mm when you cut the seal stripe to the length.
4. Push the two ends of seal stripe together.

8.9 Assembly

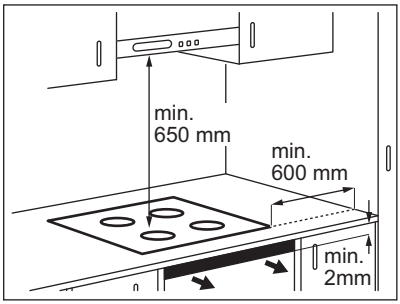
min.
650 mm
min.
600 mm
min.
2mm

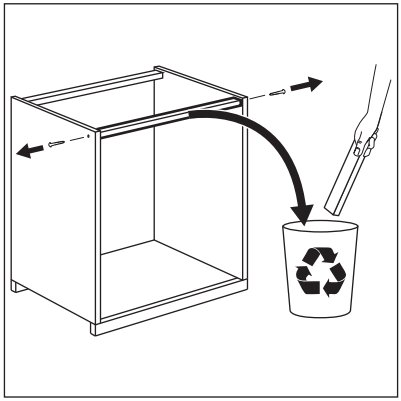

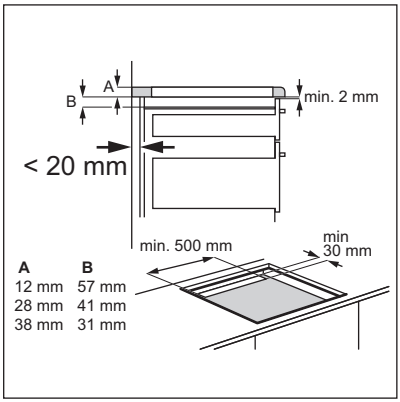
A
B
min. 2 mm
< 20 mm
min. 500 mm
min
30 mm
A B
12 mm 57 mm
28 mm 41 mm
38 mm 31 mm

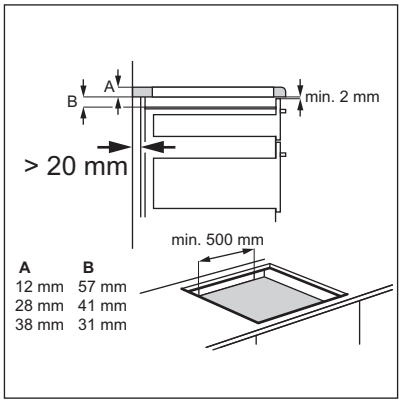
A
B
min. 2 mm
> 20 mm
min. 500 mm
A B
12 mm 57 mm
28 mm 41 mm
38 mm 31 mm

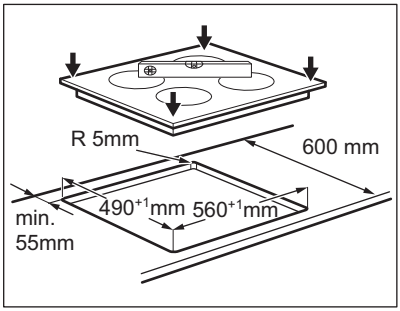
R 5mm
600 mm
490+1mm 560+1mm
min.
55mm

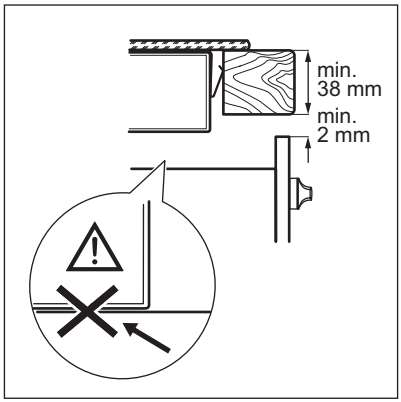
min.
38 mm
min.
2 mm

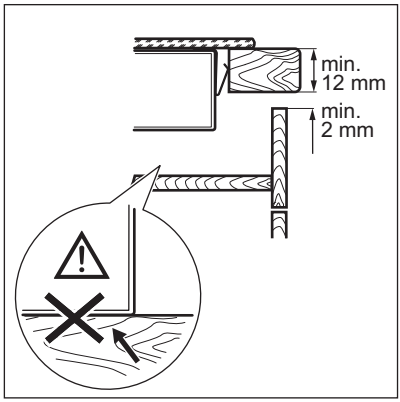

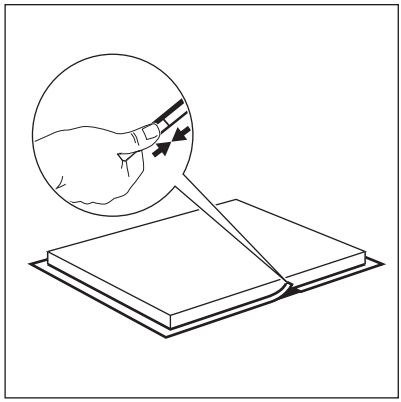

CAUTION!
Install the appliance only on a worktop with a flat surface.

A) Removable panel
B) Space for connections

Kitchen unit with oven
The electrical connection of the hob and the oven must be installed separately for safety reasons and to let easy remove oven from the unit.

8.10 Possibilities for insertion

Kitchen unit with door
The panel installed below the hob must be easy to remove and let an easy access in case a technical assistance intervention is necessary.

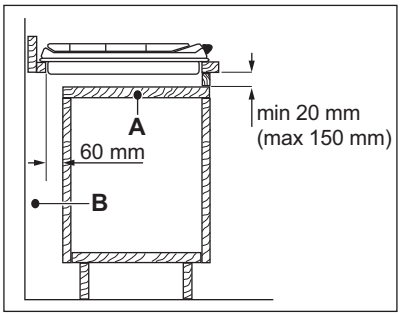

9. TECHNICAL INFORMATION

9.1 Hob dimensions

Width	590 mm
Depth	520 mm

9.2 Cooking zones specification

Cooking zone	Nominal power (maximum heat setting) [W]	Power function [W]	Power function maximum duration [min]	Cookware diameter [mm]
Left front	2300	3300	10	180 - 210
Left rear	1400	2500	4	125 - 140

The power of the cooking zones can be different in some small range from the data in the table. It changes with the material and dimensions of the cookware.

For optimal cooking results use cookware not larger than the diameter in the table.

9.3 Bypass diameters

BURNER	Ø BYPASS 1/100 mm
Rapid	52
Semi-rapid	32

9.4 Other technical data

TOTAL POWER:	Gas original:	G20 (2H) 20 mbar = 4,6 kW
	Gas replacement:	G30/G31 (3B/P) 30/30 mbar = 334 g/h G20 (2H) 13 mbar = 5,0 kW (only for Russia)
	Electric zones:	3,7 kW
Electric supply:	230 V ~ 50 Hz	
Appliance category:	II2H3B/P	
Gas connection:	G 1/2"	
Appliance class:	3	

9.5 Gas burners for NATURAL GAS G20 20 mbar

BURNER	NORMAL POWER kW	MINIMUM POWER kW	INJECTOR MARK 1/100 mm
Rapid	2,7	0,75	115
Semi-rapid	1,9	0,45	96

9.6 Gas burners for LPG G30/G31 30/30 mbar

BURNER	NORMAL POWER kW	MINIMUM POWER kW	INJECTOR MARK 1/100 mm	NOMINAL GAS FLOW g/h
Rapid	2,7	0,75	86	196
Semi-rapid	1,9	0,45	71	138

9.7 Gas burners for NATURAL GAS G20 13 mbar

BURNER	NORMAL POWER kW	MINIMUM POWER kW	INJECTOR MARK 1/100 mm
Rapid	3,0	0,75	149
Semi-rapid	2,0	0,45	111

10. ENVIRONMENTAL CONCERNS

Recycle the materials with the symbol ♺. Put the packaging in applicable containers to recycle it. Help protect the environment and human health and to recycle waste of electrical and electronic appliances. Do not dispose appliances marked with the symbol 🗑 with the household waste. Return the product to your local recycling facility or contact your municipal office.

www.electrolux.com/shop

867305107-A-EastEU-112014