Thinking of you
Electrolux

EGD6576NOK

EN HOB

USER MANUAL

CONTENTS

1. SAFETY INFORMATION 3
2. SAFETY INSTRUCTIONS 4
3. PRODUCT DESCRIPTION 7
4. DAILY USE 8
5. HELPFUL HINTS AND TIPS 11
6. CARE AND CLEANING 13
7. TROUBLESHOOTING 14
8. INSTALLATION 16
9. TECHNICAL INFORMATION 20

WE'RE THINKING OF YOU

Thank you for purchasing an Electrolux appliance. You've chosen a product that brings with it decades of professional experience and innovation. Ingenious and stylish, it has been designed with you in mind. So whenever you use it, you can be safe in the knowledge that you'll get great results every time.

Welcome to Electrolux.

Visit our website for:



Get usage advice, brochures, trouble shooter, service information:
www.electrolux.com



Register your product for better service:
www.electrolux.com/productregistration



Buy Accessories, Consumables and Original spare parts for your appliance:
www.electrolux.com/shop

CUSTOMER CARE AND SERVICE

We recommend the use of original spare parts.
When contacting Service, ensure that you have the following data available.
The information can be found on the rating plate. Model, PNC, Serial Number.

Warning / Caution-Safety information

General information and tips

Environmental information

Subject to change without notice.

1. SAFETY INFORMATION

Before the installation and use of the appliance, carefully read the supplied instructions. The manufacturer is not responsible if an incorrect installation and use causes injuries and damages. Always keep the instructions with the appliance for future reference.

1.1 Children and vulnerable people safety

⚠ **WARNING!**
Risk of suffocation, injury or permanent disability.

- This appliance can be used by children aged from 8 years and above and persons with reduced physical, sensory or mental capabilities or lack of experience and knowledge if they are supervised by an adult or a person who is responsible for their safety.
- Do not let children play with the appliance.
- Keep all packaging away from children.
- Keep children and pets away from the appliance when it operates or when it cools down. Accessible parts are hot.
- If the appliance has a child safety device, we recommend that you activate it.
- Cleaning and user maintenance shall not be made by children without supervision.

1.2 General Safety

- The appliance and its accessible parts become hot during use. Do not touch the heating elements.
- Do not operate the appliance by means of an external timer or separate remote-control system.
- Unattended cooking on a hob with fat or oil can be dangerous and may result in fire.

- Never try to extinguish a fire with water, but switch off the appliance and then cover flame e.g. with a lid or a fire blanket.
- Do not store items on the cooking surfaces.
- Do not use a steam cleaner to clean the appliance.
- Metallic objects such as knives, forks, spoons and lids should not be placed on the hob surface since they can get hot.
- If the glass ceramic surface is cracked, switch off the appliance to avoid the possibility of electric shock.
- If the supply cord is damaged, it must be replaced by the manufacturer, an authorized Service or similarly qualified persons in order to avoid a hazard.

2. ⚠ SAFETY INSTRUCTIONS

This appliance is suitable for the following markets: FR

2.1 Installation

⚠ **WARNING!**
Only a qualified person must install this appliance.

- Remove all the packaging.
- Do not install or use a damaged appliance.
- Obey the installation instruction supplied with the appliance.
- Keep the minimum distance from the other appliances and units.
- Always be careful when you move the appliance because it is heavy. Always wear safety gloves.
- Seal the cut surfaces with a sealant to prevent moisture to cause swelling.
- Protect the bottom of the appliance from steam and moisture.
- Do not install the appliance adjacent to a door or under a window. This prevents hot cookware to fall from the appliance when the door or the window is opened.
- If the appliance is installed above drawers make sure that the space, between the bottom of the appliance and the upper drawer, is sufficient for air circulation.
- Make sure that the ventilation space of 5 mm, between the worktop and the front of the below unit, is free. The warranty does not cover damages caused by the lack of an adequate ventilation space.
- The bottom of the appliance can get hot. We recommend to install a non-combustile separation panel under the appliance to prevent access to the bottom.

Electrical connection

⚠ **WARNING!**
Risk of fire and electrical shock.

- All electrical connections must be made by a qualified electrician.
- Before every wiring make sure the main terminal of the appliance is not live.
- Make sure the appliance is installed correctly. Loose and incorrect plug and

socket can make the terminal become too hot.
- Make sure that a shock protection is installed.
- Do not let the electricity bonds touch the appliance or hot cookware, when you connect the appliance to the near sockets.
- Do not let the electricity bonds tangle.
- Use a strain relief clamp on cable.
- Use the correct mains cable.
- Make sure not to cause damage to the mains plug and to the mains cable. Contact the Service or an electrician to change a damaged mains cable.
- The electrical installation must have an isolation device which lets you disconnect the appliance from the mains at all poles. The isolation device must have a contact opening width of minimum 3 mm.
- Use only correct isolation devices: line protecting cut-outs, fuses (screw type fuses removed from the holder), earth leakage trips and contactors.

Gas connection

- All gas connections should be made by a qualified person.
- Before installation, make sure that the local distribution conditions (nature of the gas and gas pressure) and the adjustment of the appliance are compatible.
- Make sure that there is air circulation around the appliance.
- The information about the gas supply is on the rating plate.
- This appliance is not connected to a device, which evacuates the products of combustion. Make sure to connect the appliance according to current installation regulations. Pay attention to requirements regarding adequate ventilation.

2.2 Use

WARNING!
Risk of injury, burns or electric shock.

- Remove all the packaging, labelling and protective film (if applicable) before first use.
- Use this appliance in a household environment.
- Do not change the specification of this appliance.
- Do not let the appliance stay unattended during operation.
- Do not operate the appliance with wet hands or when it has contact with water.
- Do not put cutlery or saucepan lids on the cooking zones. They can become hot.
- Set the cooking zone to “off” after each use. Do not rely on the pan detector.
- Do not use the appliance as a work surface or as a storage surface.
- If the surface of the appliance is cracked, disconnect immediately the appliance from the power supply. This to prevent an electrical shock.
- Users with a pacemaker must keep a distance of minimum 30 cm from the induction cooking zones when the appliance is in operation.
- When you place food into hot oil, it may splash.

WARNING!
Risk of fire or explosion.

- Fats and oil when heated can release flammable vapours. Keep flames or heated objects away from fats and oils when you cook with them.
- The vapours that very hot oil releases can cause spontaneous combustion.
- Used oil, that can contain food remnants, can cause fire at a lower temperature than oil used for the first time.
- Do not put flammable products or items that are wet with flammable products in, near or on the appliance.

WARNING!
Risk of damage to the appliance.

- Do not keep hot cookware on the control panel.
- Do not let cookware to boil dry.
- Be careful not let objects or cookware fall on the appliance. The surface can be damaged.

- Do not activate the cooking zones with empty cookware or without cookware.
- Do not put aluminium foil on the appliance.
- Cookware made of cast iron, aluminium or with a damaged bottom can cause scratches on the glass or glass ceramic. Always lift these objects up when you have to move them on the cooking surface.
- This appliance is for cooking purposes only. Do not use the appliance for other purposes, as for example room heating.
- The use of a gas cooking appliance results in the production of heat and moisture. Provide good ventilation in the room where the appliance is installed.
- Make sure that the ventilation openings are not blocked.
- Prolonged intensive use of the appliance may call for additional ventilation, for example opening of a window, or more effective ventilation, for example increasing the level of mechanical ventilation where present.
- Use only stable cookware with the correct shape and diameter larger than the dimensions of the burners. There is a risk of overheating and rupture of the glass plate (if applicable).
- Make sure the flame does not go out when you quickly turn the knob from the maximum to the minimum position.
- Make sure pots are centrally positioned on the rings and do not stick out over edges of the cooking surface.
- Use only the accessories supplied with the appliance.
- Do not install a flame diffuser on the burner.

2.3 Care and Cleaning

WARNING!
Risk of damage to the appliance.

- Clean regularly the appliance to prevent the deterioration of the surface material.
- Do not use water spray and steam to clean the appliance.
- Clean the appliance with a moist soft cloth. Only use neutral detergents. Do not use abrasive products, abrasive cleaning pads, solvents or metal objects.

2.4 Disposal

WARNING!
Risk of injury or suffocation.

- Contact your municipal authority for information on how to discard the appliance correctly.
- Disconnect the appliance from the mains supply.
- Cut off the mains cable and discard it.
- Flat the external gas pipes.

3. PRODUCT DESCRIPTION

3.1 Cooking surface layout

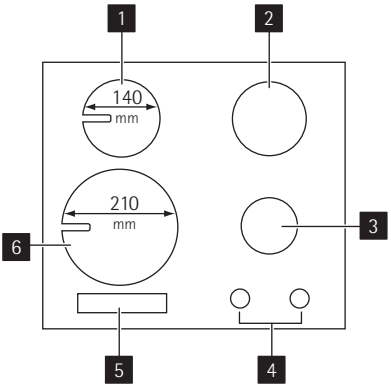

1. Induction cooking zone 1400 W with the power function 2500 W
2. Rapid burner
3. Semi-rapid burner
4. Control knobs
5. Touch control panel
6. Induction cooking zone 2300 W with the power function 3300 W

3.2 Control knobs

Symbol	Description
●	no gas supply / off position
✸ 🔥	ignition position / maximum gas supply

Symbol	Description
🔥	minimum gas supply

3.3 Control panel layout

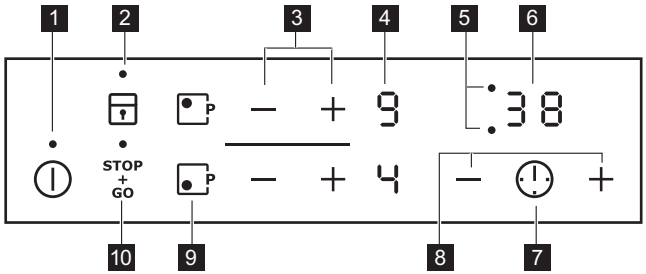

Use the sensor fields to operate the appliance. The displays, indicators and sounds tell which functions operate.

	sensor field	function
1	⏻	To activate and deactivate the appliance.
2	🔒	To lock/unlock the control panel.
3	+ / −	To increase or decrease the heat setting.

	sensor field	function
4	A heat setting display	To show the heat setting.
5	Timer indicators of cooking zones	To show for which zone you set the time.
6	The timer display	To show the time in minutes.
7	⏲	To select a cooking zone.
8	+ / –	To increase or decrease the time.
9	P	To activate the Power function.
10	STOP + GO	To activate and deactivates the STOP +GO function.

3.4 Heat setting displays

Display	Description
0	The cooking zone is off
u	Keep warm/STOP+GO function is active
1 - 9 -	The cooking zone operates
A	Automatic heat up function is active
F	The induction cooking zone does not sense the cookware
E	There is a malfunction
H	A cooking zone is still hot (residual heat)
L	Lock/Child safety device is on
P	Power function is active
-	The automatic switch off is active

3.5 Residual heat indicator

WARNING!
H Risk of burns from residual heat!

The induction cooking zones make the heat directly in the bottom of the cookware. The glass ceramic is heated by the residual heat of the cookware.

4. DAILY USE

WARNING!
Refer to "Safety information" chapter.

4.1 Ignition of the burner

WARNING!
Be very careful when you use open fire in kitchen environment. Manufacturer decline any responsibility in case misuse of the flame

Always light the burner before you put cookware.

To light the burner:

1. Turn the control knob counterclockwise to the maximum position ( ) and push it down.
2. Keep the control knob pushed for approximately 5 seconds; this will let thermocouple to warm up. If not, the gas supply will be interrupted.
3. Adjust the flame after it is regular.

If after some tries the burner does not light, check if the crown and its cap are in correct positions.

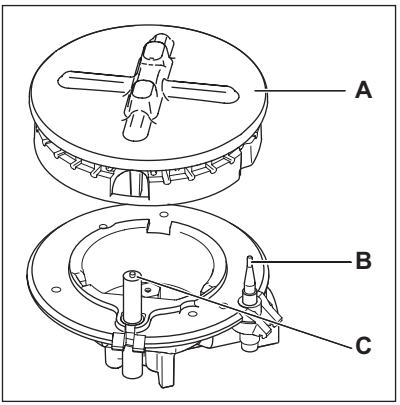

A) Burner cap and crown
B) Thermocouple
C) Ignition candle

WARNING!
Do not keep the control knob pushed for more than 15 seconds.
If the burner does not light after 15 seconds, release the control knob, turn it into off position and try to light the burner again after minimum 1 minute.

In the absence of electricity you can ignite the burner without electrical device; in this case approach the burner with a flame, push the relevant knob down and turn it counter-clockwise to maximum gas release position.

If the burner accidentally goes out, turn the control knob to the off position and try to light the burner again after minimum 1 minute.

The spark generator can start automatically when you switch on the mains, after installation or a power cut. It is normal.

4.2 Turning the burner off

To put the flame out, turn the knob to the symbol ● .

WARNING!
Always turn the flame down or switch it off before you remove the pans from the burner.

OPERATING THE INDUCTION ZONES

4.3 On and Off

Touch ⏻ for 1 second to start or stop the appliance.
After use, switch off the hob element by its control and do not rely on the pan detector.

4.4 Automatic Switch Off

The function deactivates the appliance automatically if:

- All cooking zones are deactivated ( ).
- You do not set the heat setting after you activate the appliance.
- You spill something or put something on the control panel for more than 10 seconds, (a pan, a cloth, etc.). An acoustic signal sounds some time and the appliance deactivates. Remove the object or clean the control panel.
- The appliance becomes too hot (e.g. when, a saucepan boils dry). Before you use the appliance again, the cooking zone must be cool.
- You use incorrect cookware. The symbol F comes on and the cooking zone deactivates automatically after 2 minutes.
- You do not deactivate a cooking zone or change the heat setting. After some time - comes on and the appliance deactivates. See below.

- The relation between heat setting and times of the Automatic Switch Off function:
  - [u] , [1] - [2] — 6 hours
  - [3] - [4] — 5 hours
  - [5] — 4 hours
  - [6] - [9] — 1.5 hours

4.5 The heat setting

Touch + to increase the heat setting. Touch — to decrease the heat setting. The display shows the heat setting. Touch + and — at the same time to switch off the cooking zone.

4.6 Automatic Heat Up

You can get a necessary heat setting in a shorter time if you activate the Automatic Heat Up function. This function sets the highest heat setting for some time (see the diagram), and then decreases to the necessary heat setting.
To start the Automatic Heat Up function for a cooking zone:

1. Touch [P] . The symbol [P] comes on in the display.
2. Immediately touch + . The symbol [A] comes on in the display.
3. Immediately touch — again and again until the necessary heat setting comes on. After 3 seconds [A] comes on in the display.

To stop the function, touch + .

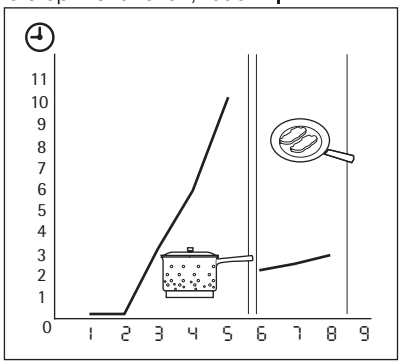

4.7 Switching on and off the power function

The power function gives more power to an induction cooking zone for no longer than 10 minutes. After that time, the induction cooking zone automatically sets back to [9] . To start it , touch [P] and [P] comes on. To stop it, set a heat setting between [1] and [9] .

Power management

The power management divides the power between two cooking zones. The power function increases the power to the maximum level for one cooking zone in the pair and automatically decreases in the second cooking zone to a lower power level. The display for the reduced zone alternates. The priority is given to the last set zone.

4.8 Using the Timer

Count Down Timer

Use the Count Down Timer to set how long the cooking zone operates for one cooking session.
Set the Count Down Timer after the selection of the cooking zone.
You can set the heat setting before or after you set the timer.

- **Selection of the cooking zone:**touch ⏲ again and again until the indicator of a necessary cooking zone comes on.
- **Starting the Count Down Timer:** touch + of the timer to set the time (00 - 99 minutes). When the indicator of the cooking zone flashes slower, the time counts down.
- **Checking the remaining time:** select the cooking zone with ⏲ . The indicator of the cooking zone flashes faster. The display shows the remaining time of the zone that will stop first.
- **Changing the Count Down Timer:** select the cooking zone with ⏲ touch + or — .
- **Stopping the timer:** select the cooking zone with ⏲ . Touch — . The remaining time counts backwards to 00 . The indicator of the cooking zone

goes out. To switch off You can also touch + and − at the same time.

When the time elapses, the sound operates and 00 flashes. The cooking zone switches off.

Minute Minder

You can use the timer as a **Minute Minder** while cooking zones do not operate. Touch . Touch + or − of the timer to select the time. When the time elapses, the sound operates and 00 flashes.

- **Stopping the sound:** touch

4.9 Starting the STOP+GO

The STOP+GO function sets all cooking zones that operate to a keep warm setting.

- **Touch STOP+GO to start** this function. The symbol comes on.
- **Touch STOP+GO to stop** this function. The heat setting that you set before comes on.

STOP+GO does not stop the timer function.
STOP+GO fully locks the control panel but not the sensor field .

4.10 Locking / unlocking the control panel

You can lock the control panel. It prevents an accidental change of the heat setting. First set the heat settings.

To start this function touch . The symbol comes on for 4 seconds.
The Timer stays on.
To stop this function touch . The heat setting that you set before comes on.
When you stop the appliance, you also stop this function.

4.11 The Child Safety Device

This function prevents an accidental operation of the hob.

Starting the Child Safety Device

- Start the hob with .**Do not set the heat setting**.
- Touch for 4 seconds. The symbol comes on.
- Stop the hob with .

Switching off the Child Safety Device

- Start the hob with .**Do not set the heat setting**. Touch for 4 seconds. The symbol comes on.
- Stop the hob with .

Overriding the Child Safety Device for one cooking session

- Start the hob with . The symbol comes on.
- Touch for 4 seconds. **Set the heat setting in less than 10 seconds.** You can operate the hob.
- When you stop the hob with , the Child Safety Device operates again.

5. HELPFUL HINTS AND TIPS

WARNING!
Refer to "Safety information" chapter.

5.1 Energy saving

How to save energy

- If it is possible, always put the lids on the cookware.
- Put cookware on a cooking zone before you start it.
- Use the residual heat to keep the food warm or to melt it.
- When the liquid starts to boil, turn down the flame to barely simmer the liquid.

WARNING!
Use cookware with diameters applicable to the size of burners.

Burner	Minimum diameters of cookware
Rapid	180 - 220 mm

Burner	Minimum diameters of cookware
Semi-rapid	120 - 220 mm

WARNING!
Do not put the aluminium foil on the hob top to keep the surface clean during the cooking.

Pots must not enter the control zone.

WARNING!
Make sure pot handles do not protrude over the front edge of the cooktop and that pots are centrally positioned on the rings in order to achieve maximum stability and to obtain lower gas consumption.

Do not place unstable or deformed pots on the rings to prevent from spill and injury.

5.2 Cookware for induction cooking zones

In induction cooking a powerful electromagnetic field generates an almost instant heat inside the cookware.

Cookware material

- **correct:** cast iron, steel, enamelled steel, stainless steel, a multi-layer bottom (marked as correct by a manufacturer).
- **not correct:** aluminium, copper, brass, glass, ceramic, porcelain.

Cookware is correct for an induction hob if …

- ... some water boils very quickly on a zone set to the highest heat setting
- ... a magnet pulls on to the bottom of the cookware.

The bottom of the cookware must be as thick and flat as possible.

Cookware dimensions: induction cooking zones adapt to the dimension of the bottom of the cookware automatically to some limit. But the minimum diameter of the magnetic part of the bottom of the cookware is in relation to the diameter of the cooking zone:

Cooking zone	Minimum diameter of cookware
Front	185 mm
Rear	120 mm

5.3 Examples of cooking applications

The data in the table is for guidance only.

Heat setting	Use to:	Time	Hints
⏑ 1	Keep cooked foods warm	as required	Cover
1-2	Hollandaise sauce, melt: butter, chocolate, gelatine	5-25 min	Mix occasionally
1-2	Solidify: fluffy omelettes, baked eggs	10-40 min	Cook with a lid on
2-3	Simmer rice and milkbased dishes, heating up ready-cooked meals	25-50 min	Add at least twice as much liquid as rice, stir milk dishes part way through
3-4	Steam vegetables, fish, meat	20-45 min	Add a few tablespoons of liquid

Heat setting	Use to:	Time	Hints
4-5	Steam potatoes	20-60 min	Use max. ¼ l water for 750 g of potatoes
4-5	Cook larger quantities of food, stews and soups	60-150 min	Up to 3 l liquid plus ingredients
6-7	Gentle fry: escalope, veal cordon bleu, cutlets, rissoles, sausages, liver, roux, eggs, pancakes, doughnuts	as required	Turn halfway through
7-8	Heavy fry, hash browns, loin steaks, steaks	5-15 min	Turn halfway through
9	Boil large quantities of water, cook pasta, sear meat (goulash, pot roast), deep fry chips		

The Power function is suitable for heating large quantities of water.

5.4 Operating noises

If you can hear

- cracking noise: cookware is made of different materials (Sandwich construction).
- whistling: you use one or more cooking zones with high power levels and the cookware is made of different materials (Sandwich construction).
- humming: you use high power levels.
- clicking: electric switching occurs.
- hissing, buzzing: the fan operates.

The noises are normal and do not refer to any defects.

6. CARE AND CLEANING

WARNING!
Refer to "Safety information" chapter.

Clean the appliance after each use.
Always use cookware with clean bottom.

WARNING!
Sharp objects and abrasive cleaning agents will damage the appliance.
For your safety, do **not** clean the appliance with steam blasters or high-pressure cleaners.

- You can remove the pan supports to easily clean the hob.
- To clean the enamelled parts, cap and crown, wash them with warm soapy water and dry them carefully before you put them back.
- Make sure you position the pan supports correctly after cleaning.
- To make the burners work correctly, make sure that the arms of the pan supports are in the centre of the burner.
- **Be very careful when you replace the pan supports to prevent the hob top from damage.**

Scratches or dark stains on the glass ceramic have no effect on how the appliance operates.

Removing the dirt:

1. – **Remove immediately:** melting plastic, plastic foil, and food containing sugar. Use a special glass ceramic scraper. Put the scraper on the glass ceramic surface at an acute angle and slide the blade on the surface.

– **Stop the appliance and let it cool down** before you clean: limescale rings, water rings, fat stains, shiny metallic discolorations. Use a special cleaner for glass ceramic or stainless steel.

2. Clean the appliance with a damp cloth and some detergent. The pan supports **are not** dishwasher proof; they must be washed **by hand**. After cleaning, make sure that the pan supports are correctly positioned.
3. At the end **rub the appliance dry with a clean cloth.**

6.1 Cleaning of the spark plug

This feature is obtained through a ceramic ignition candle with a metal electrode.

Keep these components well clean to prevent difficult lighting and check that the burner crown holes are not obstructed.

6.2 Periodic maintenance

Periodically speak your local Service Force Centre to check the conditions of the gas supply pipe and the pressure adjuster, if fitted.

7. TROUBLESHOOTING

Problem	Possible cause and remedy
You cannot start the appliance or operate it.	• You touched 2 or more sensor fields at the same time. Only touch one sensor field. • There is water or fat stains on the control panel. Clean the control panel. • Start the appliance again and set the heat setting in 10 seconds. • The child safety device or key lock or Stop+Go operates. See the chapter Operating the appliance.
A sound operates when the appliance is off.	You covered one or more sensor fields. Uncover the sensor fields.
The residual heat indicator does not come on.	The cooking zone is not hot because it operated only for a short time. If the cooking zone is supposed to be hot, speak to the After Sales Service.
Heat setting alternates	The Power management is active. See the section Power management.
A sound operates and appliance starts and stops again. After 5 seconds one more sound operates.	You covered ⏻ . Uncover the sensor field.
- comes on	• The automatic switch-off operates. Stop the appliance and start it again. • Overheating protection for the cooking zone operates. Switch off the cooking zone. Switch on the cooking zone again.

Problem	Possible cause and remedy
F comes on	• No cookware on the cooking zone. Put cookware on the cooking zone. • Not correct cookware. Use the correct cookware. • The diameter of the bottom of the cookware is too small for the cooking zone. Move cookware to a smaller cooking zone.
E and number come on	There is an error in the appliance. Disconnect the appliance from the electrical supply for some time. Disconnect the fuse from the electrical system of the house. Connect again. If E comes on again, speak to the After Sales Service.
E4 comes on	There is an error in the appliance, because a cookware boils dry or you use not correct cookware. Overheating protection for the cooking zone operates. The automatic switch-off operates. Switch off the appliance. Remove the hot cookware. After approximately 30 seconds switch on the cooking zone again. should disappear, residual heat indicator can stay. Cool down the cookware and check it with the section Cookware for the induction cooking zone.
There is no spark when lighting the gas.	• There is no electrical supply. Make sure that the unit is connected and the electrical supply is switched on. Examine the house electrical installation fuse. • Burner cap and crown are placed uneven. Make sure that the burner cap and crown are in correct positions.
The flame is blow out immediately after ignition.	Thermocouple is not heated sufficient. After lighting the flame, keep the knob pushed for equal or less than 10 seconds.
The gas ring burns unevenly.	Burner crown is blocked with food residues. Make sure that the injector is not blocked and the burner crown is clear of food particles.

If there is a fault, first try to find a solution to the problem yourself. If you cannot find a solution to the problem yourself, speak your dealer or the local Service Force Centre.

If you operated the appliance incorrectly, or the installation was not carried out by a registered engineer, the visit from the customer service technician or dealer may not take place free of charge, even during the warranty period.

These data are necessary to help you quickly and correctly. These data are available on the supplied rating plate.

- Model description .....
- Product number (PNC) .....
- Serial Number (S.N.) .....

Use the original spare parts only. They are available at Service Force Centre and approved spare parts shops.

7.1 Labels supplied with the accessories bag

Stick the adhesive labels as indicated below:

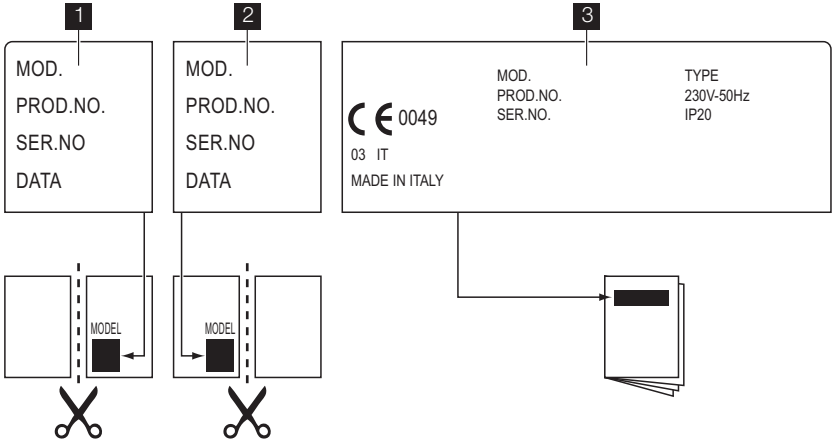

1 Stick it on Guarantee Card and send this part

2 Stick it on Guarantee Card and keep this part

3 Stick it on instruction booklet

8. INSTALLATION

WARNING!
Refer to "Safety information" chapter.

WARNING!
The following instructions about installation, connection and maintenance must be carried out by qualified personnel in compliance with standards and local regulations in force.

8.1 Gas Connection

Choose fixed connections or use a flexible pipe in stainless steel in compliance with the regulation in force. If you use flexible metallic pipes, be careful they do not come in touch with mobile parts or they are not squeezed. Also be careful when the hob is put together with an oven.

Make sure that the gas supply pressure of the appliance obeys the recommended values. The adjustable connection is fixed to the comprehensive ramp with a threaded nut G 1/2". Screw the parts and tighten everything with teflon tape, if necessary, to get the right direction.

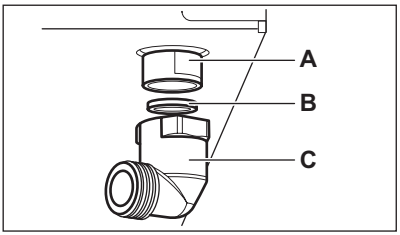

A) End of shaft with nut

B) Washer

C) Elbow (if needed)

Rigid connection:

Carry out connection by using metal rigid pipes (copper with mechanical end).

"Flexible" connection with mechanical end:

– **Natural gas**: connection carry out with a flexible pipe with mechanical end which is screwed directly on the elbow finishing the slope of the appliance.
– **Butane / Propane**: use a flexible tube, equipped with it's collars if it is worth visiting over all it's length and if the appliance runs only on butane. If the appliance runs on Propane, use a flexible pipe with suitable metal end.

Flexible nonmetal pipes connection:

If it is possible to easily control the connection in its full area, you can use a flexible pipe. Tightly attach the flexible pipe by clamps.
Liquid gas: use the rubber pipe holder. Always engage the gasket. Then continue with the gas connection. The flexible pipe is prepared for apply when:
– it can not get hot more than room temperature, higher than 30°C;
– it is no longer than 1500 mm;
– it shows no throttles;
– it is not subject to traction or torsion;
– it does not get in touch with cutting edges or corners;
– it can be easily examined in order to check its condition.
The control of preservation of the flexible pipe consists in checking that:
– it does not show cracks, cuts, marks of burnings on the two ends and on its full length;
– the material is not hardened, but shows its correct elasticity;
– the fastening clamps are not rusted;
– expired term is not due.
If one or more defects are visible, do not repair the pipe, but replace it.



When installation is complete, make sure that the seal of each pipe fitting is correct. Use a soapy solution, **not a flame**!

8.2 Injectors replacement

1. Remove the pan supports.
2. Remove the caps and crowns of the burner.
3. With a socket spanner 7 remove the injectors and replace them with the ones which are necessary for the type of gas you use (see table in "Technical Information" chapter).
4. Assemble the parts, follow the same procedure backwards.
5. Replace the rating plate (it is near the gas supply pipe) with the one for the new type of gas supply. You can find this plate in the package supplied with the appliance.

If the supply gas pressure is changeable or different from the necessary pressure, you must fit an applicable pressure adjuster on the gas supply pipe.

8.3 Adjustment of minimum level

To adjust the minimum level of the burners:
1. Light the burner.
2. Turn the knob on the minimum position.
3. Remove the knob.
4. With a thin screwdriver, adjust the by-pass screw position.

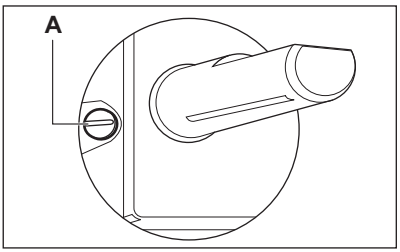

A) The by-pass screw
– If you change from natural gas G20/G25 20/25 mbar to liquid gas, fully tighten the adjustment screw in.
– If you change from liquid gas to natural gas G20/G25 20/25 mbar, undo the by-pass screw approximately 1/4 of a turn.

WARNING!
Make sure the flame does not go out when you quickly turn the knob from the maximum position to the minimum position.

8.4 Electrical connection

- Ground the appliance according to safety precautions.
- Make sure that the rated voltage and type of power on the rating plate agree with the voltage and the power of the local power supply.
- This appliance is supplied with a mains cable. It has to be supplied with a correct plug, able to support the load marked on the rating plate. The plug has to be fitted in a correct socket.
- Any electrical component must be installed or replaced by the Service Force Centre technician or qualified service personnel.
- Always use a correctly installed shockproof socket.
- Make sure that there is an access to the mains plug after installation.
- Do not pull the mains cable to disconnect the appliance. Always pull the mains plug.
- The appliance must not be connected with an extension cable, an adapter or a multiple connection (risk of fire). Check that the ground connection is in conformity with the standard and regulations force.
- The power cable must be placed in such a way that it does not touch any hot part.
- Connect the appliance to the mains with a device that lets to disconnect the appliance from the mains at all poles with a contact opening width of minimum 3 mm, eg. automatic line protecting cut-out, earth leakage trips or fuse.
- None of a parts of the connection cable can not get a temperature 90 °C. The blue neutral cable must be connected to the terminal block label with "N". The brown (or black) phase cable (fitted in the terminal block contact marked with "L") must always be connected to the live phase.

8.5 Replacement of the connection cable

To replace the connection cable use only H05V2V2-F T90 or equivalent type. Make sure that the cable section is applicable to the voltage and the working temperature. The yellow/green earth wire must be approximately 2 cm longer than the brown (or black) phase wire.

8.6 Assembly

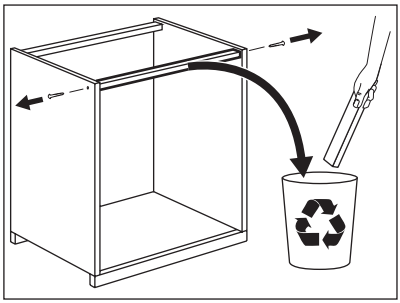

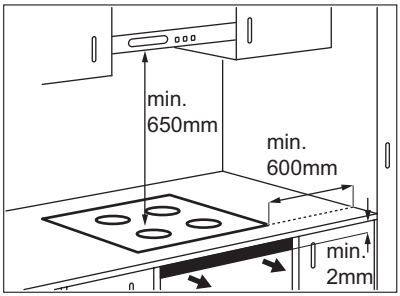

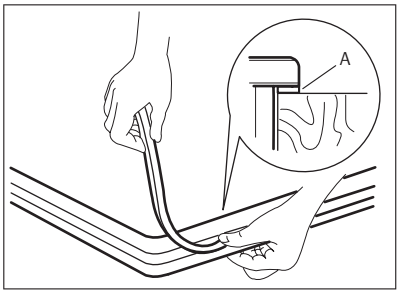

A — supplied seal

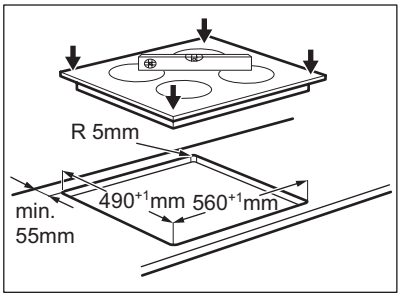

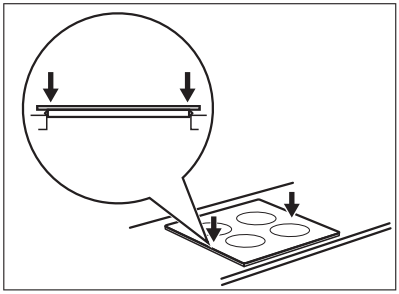

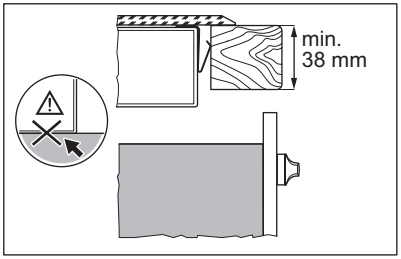

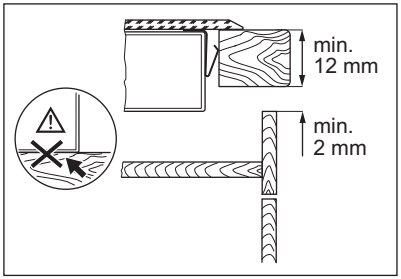

CAUTION!
Install the appliance only on a worktop with flat surface.

8.7 Possibilities for insertion

Kitchen unit with door

The panel installed below the hob must be easy to remove and let an easy access in case a technical assistance intervention is necessary.

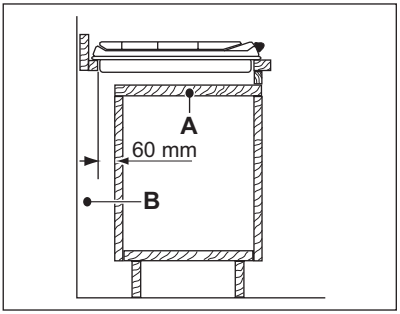

A) Removable panel
B) Space for connections

Kitchen unit with oven

The electrical connection of the hob and the oven must be installed separately for safety reasons and to let easy remove oven from the unit.

9. TECHNICAL INFORMATION

Hob dimensions

Width:	590 mm
Length:	520 mm

Hob recess dimensions

Width:	560 mm 0/+1
Length:	490 mm 0/+1

Heat input

Semi-rapid burner:	1.9 kW
Rapid burner:	2.7 kW
Rear cooking zone:	1.4 kW (2.5 kW in P setting)
Front cooking zone:	2.3 kW (3.3 kW in P setting)
Total gas power:	G20/G25 (2E+) 20/25 mbar = 4.6 kW G30/G31 (3+) 28-30/37 mbar = 334 g/h
Total electrical power:	3.7 kW
Electric supply:	230 V ~ 50 Hz
Category:	II2E+3+
Gas supply:	G20/G25 (2E+) 20/25 mbar
Appliance class:	3

By-pass diameters

Burner	Ø By-pass in 1/100 mm
Semi-rapid	32
Rapid	52

Gas burners for NATURAL GAS G20 20 mbar

BURNER	NORMAL POWER kW	inj. 1/100 mm
Semi-rapid	1.9	96
Rapid	2.7	115

Gas burners for LPG G30/G31 28-30/37 mbar

BURNER	NORMAL POWER kW	inj. 1/100 mm	G30 28–30 mbar	G31 37 mbar
			g/h	g/h
Semi-rapid	1.9	71	138	136
Rapid	2.7	86	196	193

10. ENVIRONMENT CONCERNS

Recycle the materials with the symbol . Put the packaging in applicable containers to recycle it.
Help protect the environment and human health and to recycle waste of electrical and electronic appliances. Do not dispose appliances marked with the symbol with the household waste. Return the product to your local recycling facility or contact your municipal office.

www.electrolux.com/shop



892943812-E-FR-282013