4. CHARGE YOUR PHONE

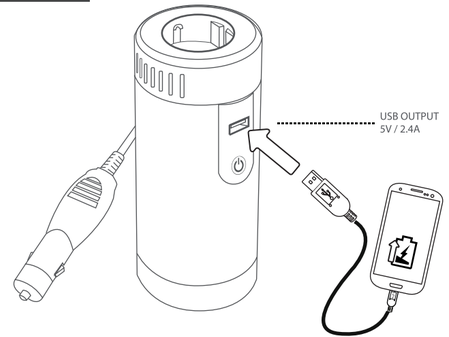

5. REPLACE FUSE

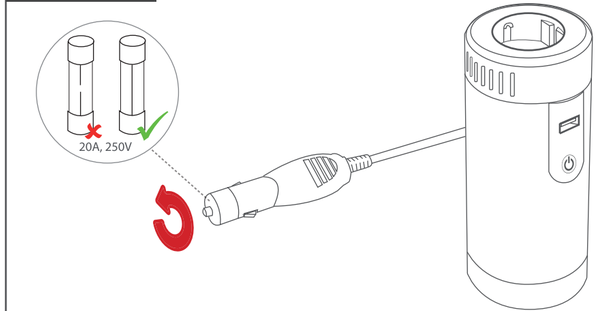

OVERLOAD ⚠



Frequently asked questions

www.trust.com/20838/faq

Trust International BV, Laan van Barcelona 600 3317DD Dordrecht, NL
© 06-01-2016 Trust International B.V. All rights reserved.

Trust URBAN



CAR 230 VOLT POWER SOCKET

12V TO 230V POWER INVERTER

SETUP

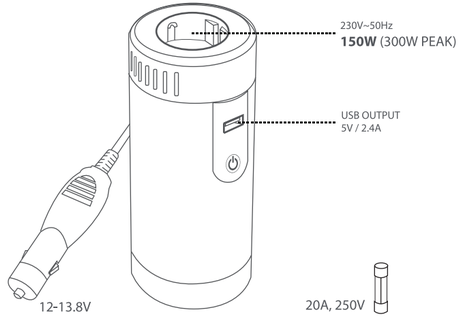

1. CONNECTING 1/2

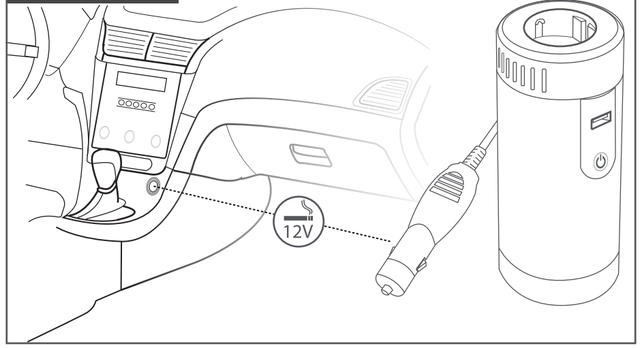

2. CONNECTING 2/2

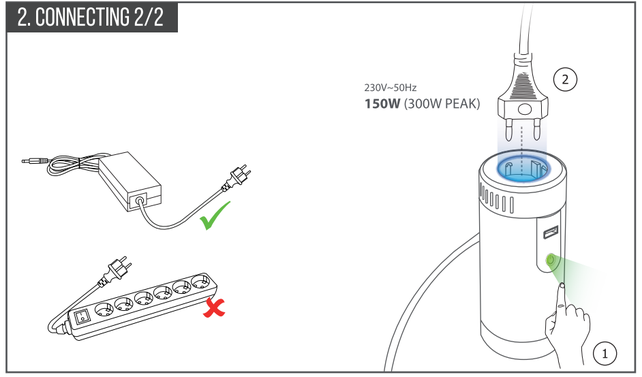

3. INTENDED USE

