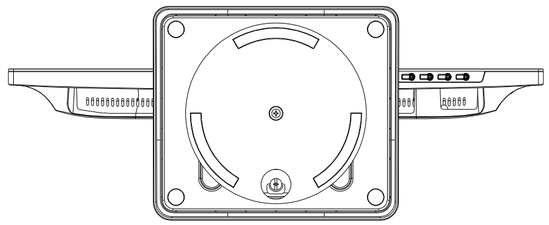

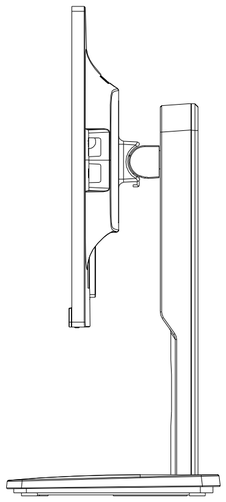

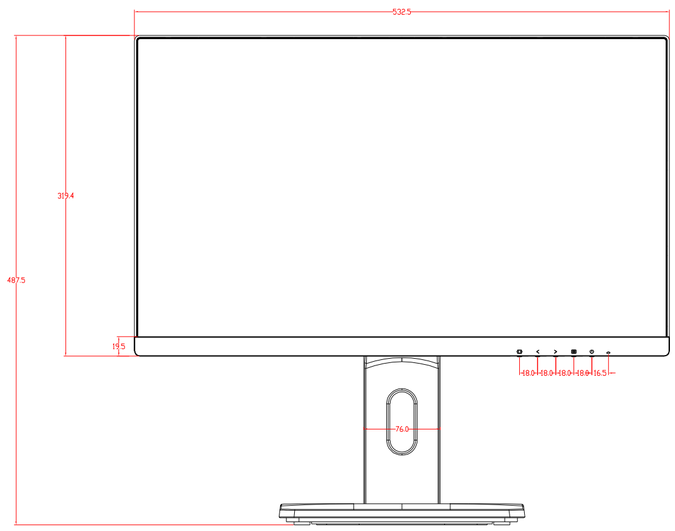
532.5
315.4
487.5
19.5
48.0
48.0
48.0
48.0
16.5
76.0

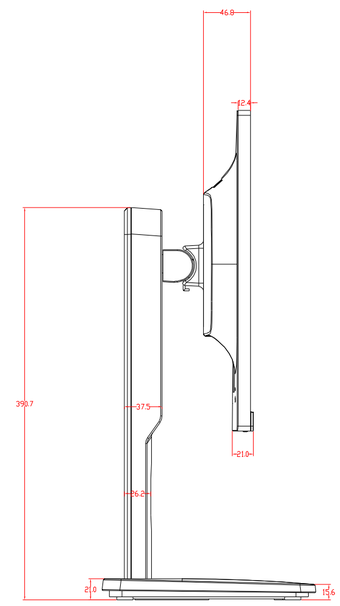
46.8
12.4
390.7
37.5
21.0
26.2
21.0
15.6

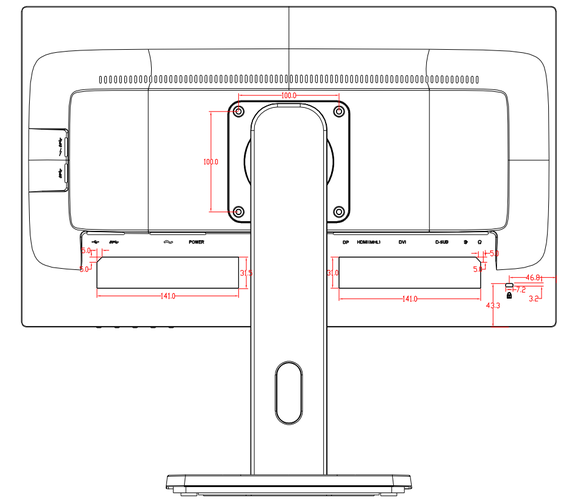
100.0
100.0
POWER
DP
HDMI(MHL)
DVI
D-SUB
9.0
6.0
31.4
141.0
5.0
5.0
31.0
141.0
46.8
7.2
3.2
43.3

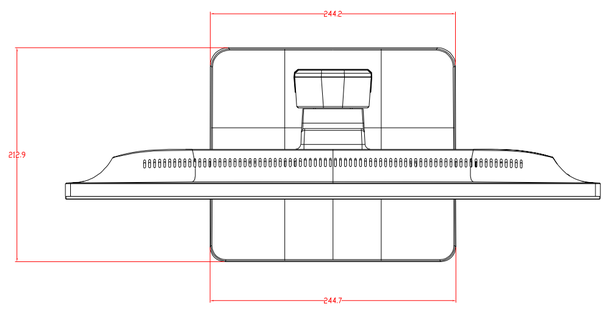
244.2
212.9
244.7