4. OPEN CAMERA APP

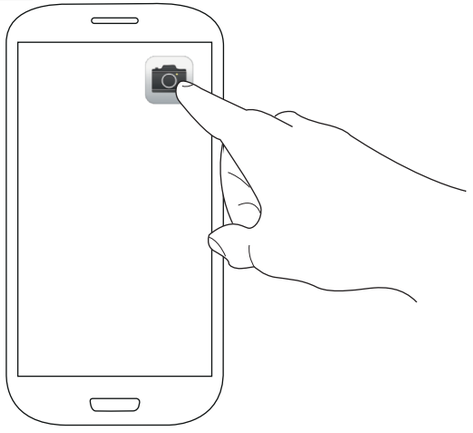

5. TAKE A PICTURE

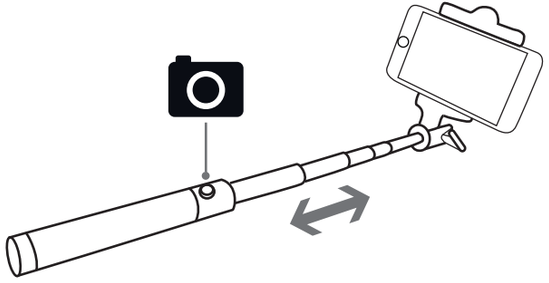

FAQ

Frequently asked questions

http://www.trust.com/21194/faq

Trust International BV - Laan van Barcelona 600 - 3317DD, Dordrecht, NL

© 03-11-2015 Trust All rights reserved.

Trust URBAN



USER GUIDE
WIRED SELFIE STICK

1. INSERT A PHONE

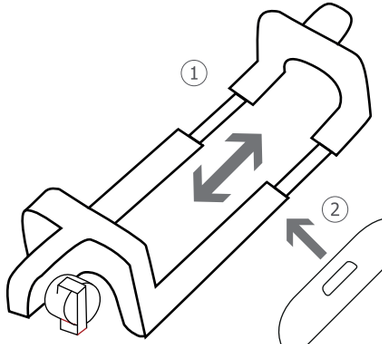

2. SETTING THE ANGLE

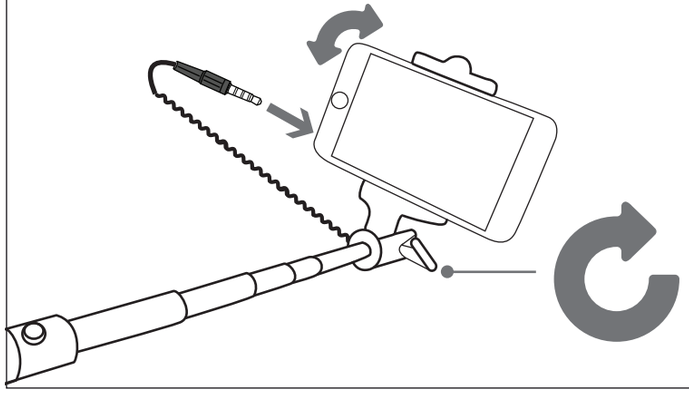

3. OPTIONAL ANDROID SETTING

