THE BEST SUPPORT
FOR YOUR AV & IT HARDWARE
T: + 31(0)23-5478888 | E: info@newstar.eu | W: www.newstar.eu

NM-C440BLACK NEWSTAR FLAT SCREEN CEILING MOUNT

NewStar TV/Monitor Ceiling Mount for
32"-60" Screen, Height Adjustable - Black

SPECIFICATIONS

Color	Black
Depth	8 cm
Height	56 - 91 cm
Height adjustment	Manual
Max. screen size	60
Max. weight	50
Min. screen size	32
Min. weight	0
Rotate (degrees)	6°
Screens	1
Swivel (degrees)	360°
Tilt (degrees)	25°
Type	Tilt Rotate Turn Full motion
VESA maximum	400x400 mm
VESA minimum	200x200 mm
Warranty	5 year
EAN code	8717371445614

The NewStar ceiling mount, model NM-C440BLACK is a tilt- and swivel ceiling mount for flat screens up to 60”. This mount is a great choice for space saving placement or when wall mounting and floor placement is not an option.

NewStars’ unique tilt (25°) and rotation (360°) technology allows the mount to change to any viewing angle to fully benefit from the capabilities of the flat screen. The support is easily height adjustable from 56 to 91 centimeters. A unique cable management conceals and routes cables from ceiling to TV. Hide your cables in the column to keep it nice and tidy.

NewStar NM-C440BLACK has two pivot points and is suitable for screens up to 60" (152 cm). The weight capacity of this product is 50 kg. The ceiling mount is suitable for screens that meet VESA hole pattern 200x200 to 400x400mm.

All installation material is included with the product.

NewStar Products Europe B.V.
Wateringweg 62/B
2031 EJ HAARLEM
THE NETHERLANDS

Phone : +31(0)23-5478888
Fax : +31(0)23-5478889
Email : info@newstar.nl
Website : www.newstar.eu

NewStar cannot be held liable for any inaccuracies and copyrights.

No part of this publication may be reproduced and/or published by print, photocopy, microfilm or in any other way, without prior written permission of NewStar Computer Products Europe BV.

THE BEST SUPPORT
FOR YOUR AV & IT HARDWARE
T: + 31(0)23-5478888 | E: info@newstar.eu | W: www.newstar.eu

NM-C440BLACK NEWSTAR FLAT SCREEN CEILING MOUNT

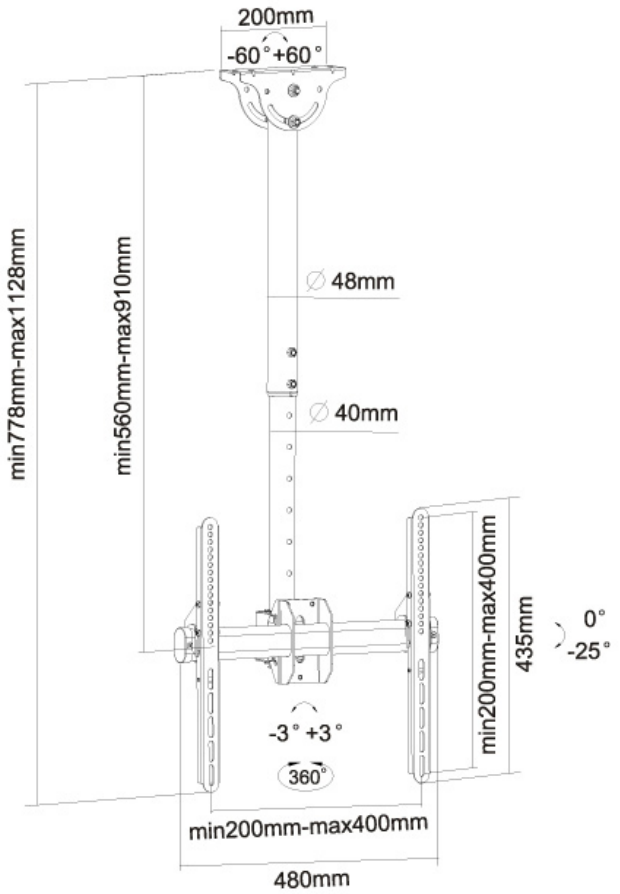

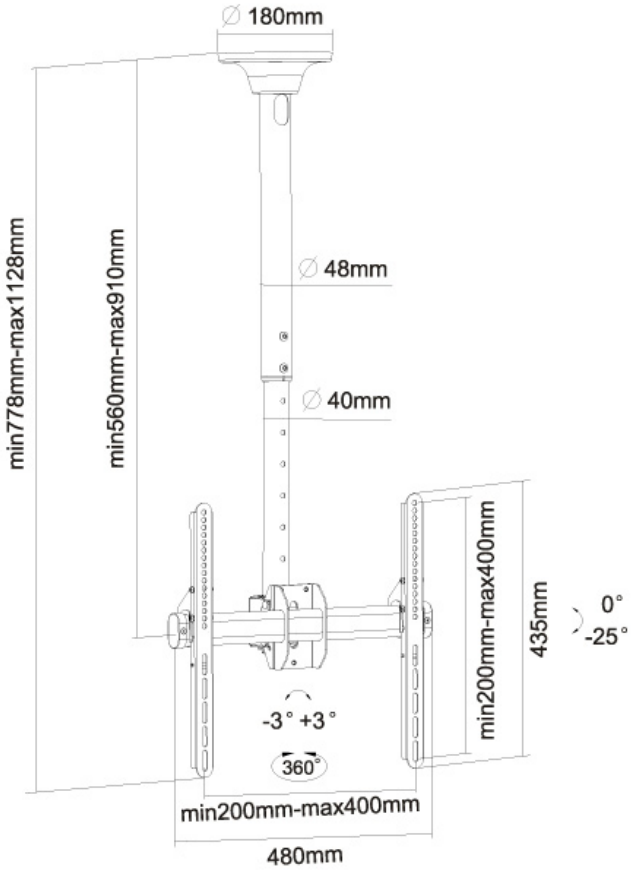

NewStar Products Europe B.V.
Wateringweg 62/B
2031 EJ HAARLEM
THE NETHERLANDS

Phone : +31(0)23-5478888
Fax : +31(0)23-5478889
Email : info@newstar.nl
Website : www.newstar.eu

NewStar cannot be held liable for any inaccuracies and copyrights.

No part of this publication may be reproduced and/or published by print, photocopy, microfilm or in any other way, without prior written permission of NewStar Computer Products Europe BV.