ENGLISH

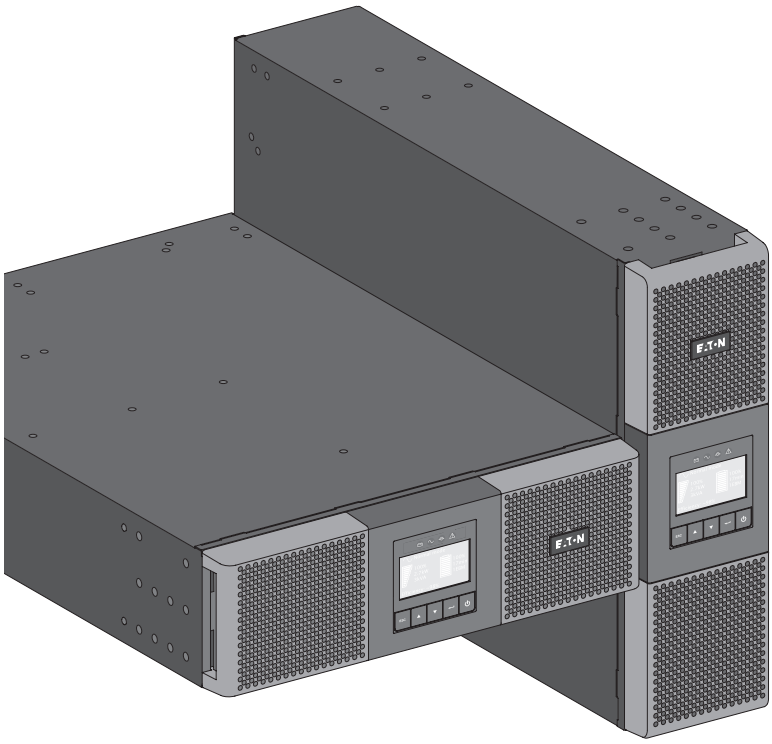

9PX3K3U
9PX EBM 180 V

Installation and user manual

Copyright © 2016 **EATON**
All rights reserved.

Service and support:
Call your local service representative

9PX3K3U US_EN

SAFETY INSTRUCTIONS

SAVE THESE INSTRUCTIONS. This manual contains important instructions that should be followed during installation and maintenance of the UPS and batteries.

The 9PX models that are covered in this manual are intended for installation in an environment within 0 to 40°C, free of conductive contaminant.

This equipment has been tested and found to comply with the limits for a Class A digital device, pursuant to Part 15 of the FCC Rules. These limits are designed to provide reasonable protection against harmful interference when the equipment is operated in a commercial environment. This equipment generates, uses, and can radiate radio frequency energy and, if not installed and used in accordance with the instruction manual, may cause harmful interference to radio communications. Operation of this equipment in a residential area is likely to cause harmful interference in which case the user will be required to correct the interference at his own expense.

Certification standards

- Safety: IEC/EN 62040-1 / Ed.1: 2008.
  UL 1778 4th edition
- EMC: IEC/EN 62040-2 / Ed.2: 2006.
  FCC part 15 Class A.
- Performance: IEC/EN 62040-3 / Ed.2.0: 2011.
- IEC 61000-4-2 (ESD): level 3.
- IEC 61000-4-3 (Radiated field): level 3.
- IEC 61000-4-4 (EFT): level 4.
- IEC 61000-4-5 (Fast transients): level 4.
- IEC 61000-4-6 (Electromagnetic field): level 3.
- IEC 61000-4-8 (Conducted magnetic field): level 4.

Special symbols

The following are examples of symbols used on the UPS or accessories to alert you to important information:

RISK OF ELECTRIC SHOCK - Observe the warning associated with the risk of electric shock symbol.

Important instructions that must always be followed.

Do not discard the UPS or the UPS batteries in the trash.
This product contains sealed lead acid batteries and must be disposed as it's explain in this manual.
For more information, contact your local recycling/reuse or hazardous waste center.

This symbol indicates that you should not discard waste electrical or electronic equipment (WEEE) in the trash. For proper disposal, contact your local recycling/reuse or hazardous waste center.

Information, advice, help.

Refer to the user manual of UPS accessories.

SAFETY INSTRUCTIONS

Safety of persons

- The system has its own power source (the battery). Consequently, the power outlets may be energized even if the systems is disconnected from the AC power source. Dangerous voltage levels are present within the system. It should be opened exclusively by qualified service personnel.
- The system must be properly grounded.
- The battery supplied with the system contains small amounts of toxic materials.
  To avoid accidents, the directives listed below must be observed:
  - Servicing of batteries should be performed or supervised by personnel knowledgeable about batteries and the required precautions.
  - When replacing batteries, replace with the same type and number of batteries or battery packs.
  - Do not dispose of batteries in a fire. The batteries may explode.
  - Batteries constitute a danger (electrical shock, burns). The short-circuit current may be very high.
- Precautions must be taken for all handling:
  - Wear rubber gloves and boots.
  - Do not lay tools or metal parts on top of batteries.
  - Disconnect charging source prior to connecting or disconnecting battery terminals.
  - Determine if battery is inadvertently grounded. If inadvertently grounded, remove source from ground. Contact with any part of a grounded battery can result in electrical shock. The likelihood of such shock can be reduced if such grounds are removed during installation and maintenance (applicable to equipment and remote battery supplies not having a grounded supply circuit).

Product safety

- The UPS connection instructions and operation described in the manual must be followed in the indicated order.
- CAUTION - To reduce the risk of fire, the unit connects only to a circuit provided with branch circuit overcurrent protection for : 30A rating, for 9PX3K3U models in accordance with the National Electric Code, ANSI/NFPA 70.
  The upstream circuit breaker must be easily accessible.
  The unit can be disconnected from AC power source by opening this circuit breaker.
- Disconnection and overcurrent protection devices shall be provided by others for permanently connected AC input/output circuits.
- Check that the indications on the rating plate correspond to your AC powered system and to the actual electrical consumption of all the equipment to be connected to the system.
- For PLUGGABLE EQUIPMENT, the socket-outlet shall be installed near the equipment and shall be easily accessible
- Never install the system near liquids or in an excessively damp environment.
- Never let a foreign body penetrate inside the system.
- Never block the ventilation grates of the system.
- Never expose the system to direct sunlight or source of heat.
- If the system must be stored prior to installation, storage must be in a dry place.
- The admissible storage temperature range is -15°C to +50°C.
- The system is not for use in a computer room AS DEFINED IN the standard for the Protection of Information Technology Equipment, ANSI/NFPA 75.
  Contact Eaton resellers to order a special battery kit, if needed to meet the ANSI/NFPA 75 requirement.

SAFETY INSTRUCTIONS

Special precautions

- The unit is heavy: wear safety shoes and use vacuum lifter preferentially for handling operations.
- All handling operations will require at least two people (unpacking, lifting, installation in rack system).
- Straps are provided only for unpacking manually the unit from the carton; don't use the straps to carry the unit around. The unit can slip from the straps during handling (risk of injury and product damage):

  - keep 12in / 30cm minimum distance between the straps
  - lift the unit carefully and keep it at low height
  - keep the unit horizontal during unpacking.
- Before and after the installation, if the UPS remains de-energized for a long period, the UPS must be energized for a period of 24 hours, at least once every 6 months (for a normal storage temperature less than 25°C). This charges the battery, thus avoiding possible irreversible damage.
- During the replacement of the Battery Module, it is imperative to use the same type and number of element as the original Battery Module provided with the UPS to maintain an identical level of performance and safety. In case of doubt, don't hesitate to contact your EATON representative.
- All repairs and service should be performed by AUTHORIZED SERVICE PERSONNEL ONLY. There are NO USER SERVICEABLE PARTS inside the UPS.

Contents

1. Introduction 6
1.1 Environmental protection 6

2. Presentation 8
2.1 Standard installations 8
2.2 Rear panels 9
2.3 Accessories 10
2.4 Control panel 12
2.5 LCD description 13
2.6 Display functions 14
2.7 User settings 14

3. Installation 16
3.1 Inspecting the equipment 16
3.2 Unpacking the cabinet 16
3.3 Checking the accessory kit 17
3.5 Connecting the EBM(s) 19
3.6 Connecting other accessories 19
3.7 Tower installation 20
3.8 Rack installation 21
3.9 Installation requirements 23

4. Power cables connection 24
4.1 Access to terminal blocks 24
4.2 Input/Output connection 24

5. Operation 25
5.1 UPS startup and shutdown 25
5.2 Operating modes 26
5.3 Transferring the UPS between modes 26
5.4 Setting High Efficiency mode 27
5.5 Configuring Bypass settings 27
5.6 Configuring battery settings 27
5.7 Retrieving the Event log 28
5.8 Retrieving the Fault log 28

6. Communication 29
6.1 Communication ports 29
6.2 Eaton Intelligent Power Software suite 32

7. UPS maintenance 33
7.1 Equipment care 33
7.2 Storing the equipment 33
7.3 When to replace batteries 33
7.4 Replacing batteries 34
7.5 Replacing the UPS equipped with a HotSwap MBP or with a PPDM 37
7.6 Recycling the used equipment 37

8. Troubleshooting 38
8.1 Typical alarms and faults 38
8.2 Silencing the alarm 40
8.3 Service and support 40

9. Specifications 41
9.1 Model specifications 41

10. Glossary 45

1. Introduction

Thank you for selecting an EATON product to protect your electrical equipment.

The 9PX range has been designed with the utmost care.
We recommend that you take the time to read this manual to take full advantage of the many features of your UPS (Uninterruptible Power System).

Before installing your 9PX, please read the booklet presenting the safety instructions.
Then follow the indications in this manual.

To discover the entire range of EATON products and the options available for the 9PX range, we invite you to visit our web site at www.eaton.com/powerquality or contact your EATON representative.

1.1 Environmental protection

EATON has implemented an environmental-protection policy.
Products are developed according to an eco-design approach.

Substances

This product does not contain CFCs, HCFCs or asbestos.

Packing

To improve waste treatment and facilitate recycling, separate the various packing components.

- The cardboard we use comprises over 50% of recycled cardboard.
- Sacks and bags are made of polyethylene.
- Packing materials are recyclable and bear the appropriate identification symbol 01 PET

Materials	Abbreviations	Number in the symbols 01 PET
Polyethylene terephthalat	PET	01
High-density polyethylene	HDPE	02
Polyvinyl chloride	PVC	03
Low-density polyethylene	LDPE	04
Polypropylene	PP	05
Polystyrene	PS	06

Follow all local regulations for the disposal of packing materials.

End of life

EATON will process products at the end of their service life in compliance with local regulations.
EATON works with companies in charge of collecting and eliminating our products at the end of their service life.

Product

The product is made up of recyclable materials.
Dismantling and destruction must take place in compliance with all local regulations concerning waste.
At the end of its service life, the product must be transported to a processing center for electrical and electronic waste.

Battery

The product contains lead-acid batteries that must be processed according to applicable local regulations concerning batteries.
The battery may be removed to comply with regulations and in view of correct disposal.

1. Introduction

The Eaton® 9PX uninterruptible power system (UPS) protects your sensitive electronic equipment from the most common power problems, including power failures, power sags, power surges, brownouts, line noise, high voltage spikes, frequency variations, switching transients, and harmonic distortion.

Power outages can occur when you least expect it and power quality can be erratic. These power problems have the potential to corrupt critical data, destroy unsaved work sessions, and damage hardware - causing hours of lost productivity and expensive repairs.

With the Eaton 9PX, you can safely eliminate the effects of power disturbances and guard the integrity of your equipment. Providing outstanding performance and reliability, the Eaton 9PX's unique benefits include:

- True online double-conversion technology with high power density, utility frequency independence, and generator compatibility.
- ABM® technology that uses advanced battery management to increase battery service life, optimize recharge time, and provide a warning before the end of useful battery life.
- Selectable High Efficiency mode of operation.
- Standard communication options: one RS-232 communication port, one USB communication port, and relay output contacts.
- Optional connectivity cards with enhanced communication capabilities.
- Extended runtime with up to twelve Extended Battery Modules (EBMs) per UPS.
- Firmware that is easily upgradable without a service call.
- Remote On/Off control through Remote On/Off (ROO) and Remote Power Off (RPO) ports.
- Backed by worldwide agency approvals.

2. Presentation

2.1 Standard installations

Tower installation

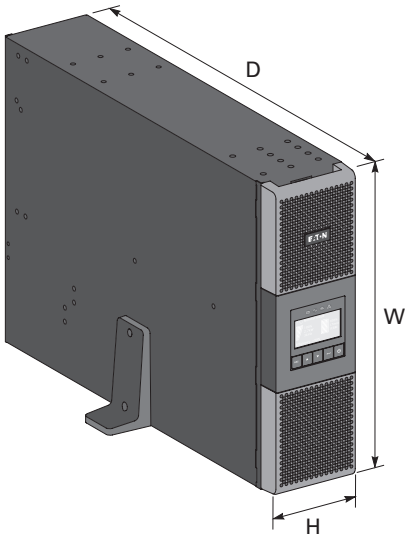

Rack installation

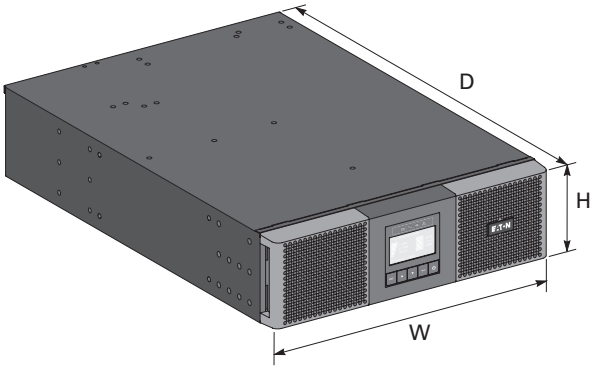

Description	Weights (lb/kg)	Dimensions (inch/mm) D x W x H
9PX3K3U	106 / 48	28.4 x 17.3 x 5.1 / 722 x 440 x 130
9PX EBM 180V	150 / 68	25.4 x 17.3 x 5.1 / 645 x 440 x 130

2.2 Rear panels

9PX3K3U

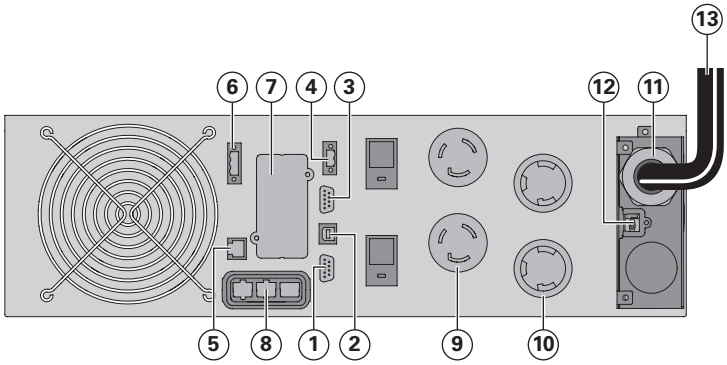

1. RS232 communication port
2. USB communication port
3. Dry (relay) contacts communication port
4. Connector for ROO (Remote On/Off) control
5. Connectors for automatic recognition of an additional battery module
6. Connector for RPO (Remote Power Off) control
7. Slot for optional communication card
8. Connector for additional battery module
9. (2) L6-20R outlets
10. (2) L6-30R outlets
11. Input/Output terminal blocks
12. Connector for HotSwap MBP detection
13. Input power cable with L6-30P plug

9PX EBM 180V (Extended Battery Module)

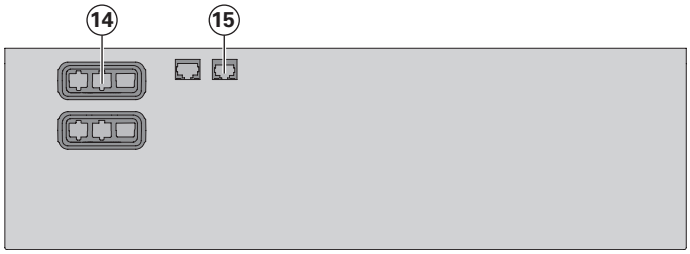

14. Connectors for battery modules (to the UPS or to the other battery modules)
15. Connectors for automatic recognition of battery modules

2. Presentation

2.3 Accessories

Part number	Description
9PXEBM180RT	Extended Battery Module
9RK	Rack kit 9PX
RK2PC	2-post Rack Kit 9PX
Network-MS	Network card
Modbus-MS	Modbus and network card
Relay-MS	Relay card
MBP6K208	HotSwap MBP 6000 208
9PXTFMR5	5kVA Transformer
9PXPPDM1	6kVA PPDM (Type 1)
9PXPPDM2	6kVA PPDM (Type 2)
BINTSYS	Battery Integration System
EBMCBL180	1.8m cable 180V EBM

MBP6K208

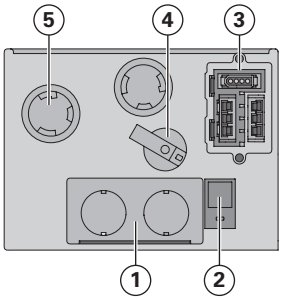

1. Input/Output terminal blocks
2. Normal AC source switch
3. Input/Output connector to the UPS
4. Manual Bypass switch
5. (2) 30A outlets

9PXTFMR5

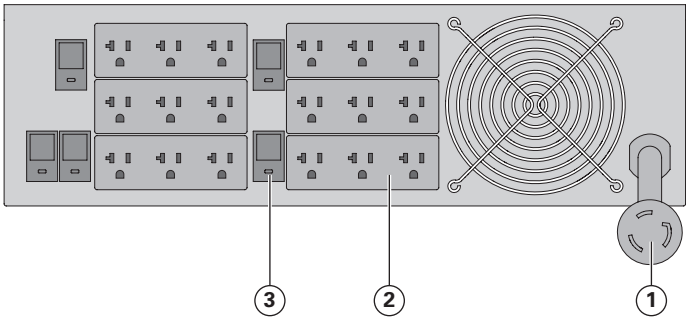

1. L6-30P input power cable
2. (18) 5-20R 120V outlets
3. 20A circuit breaker

2. Presentation

9PXPPDM1

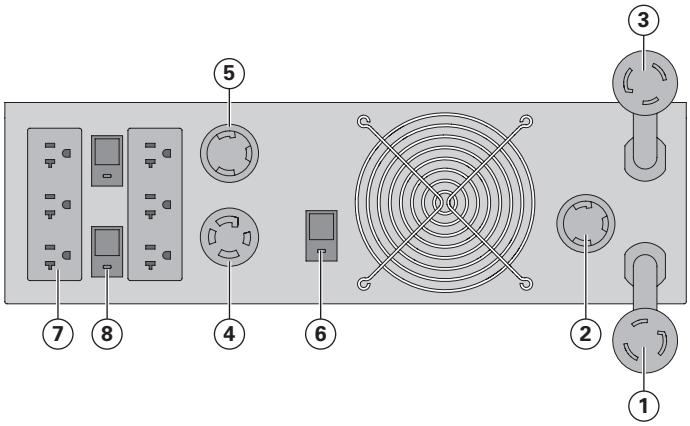

1. L6-30P input power cable
2. L6-30R outlet for connection to UPS input
3. L6-30P cable for connection to UPS output
4. L14-30R 120V/240V outlet
5. L6-30R 240V outlet
6. 30A circuit breaker
7. (6) 5-20R 120V outlets
8. 20A circuit breaker

9PXPPDM2

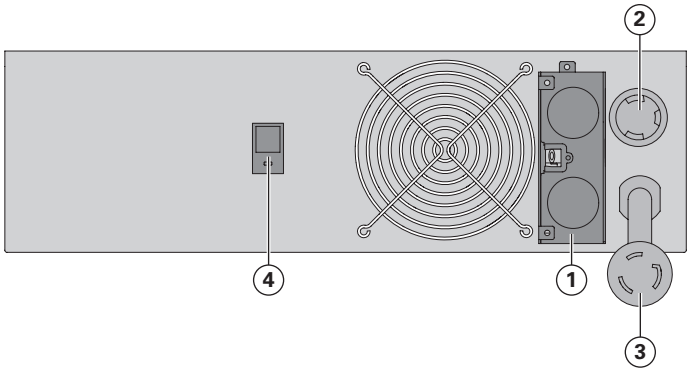

1. Input/Output terminal blocks
2. L6-30R outlet for connection to UPS input
3. L6-30P cable for connection to UPS output
4. 30A output circuit breaker

2. Presentation

2.4 Control panel

The UPS has a five-button graphical LCD. It provides useful information about the UPS itself, load status, events, measurements and settings.

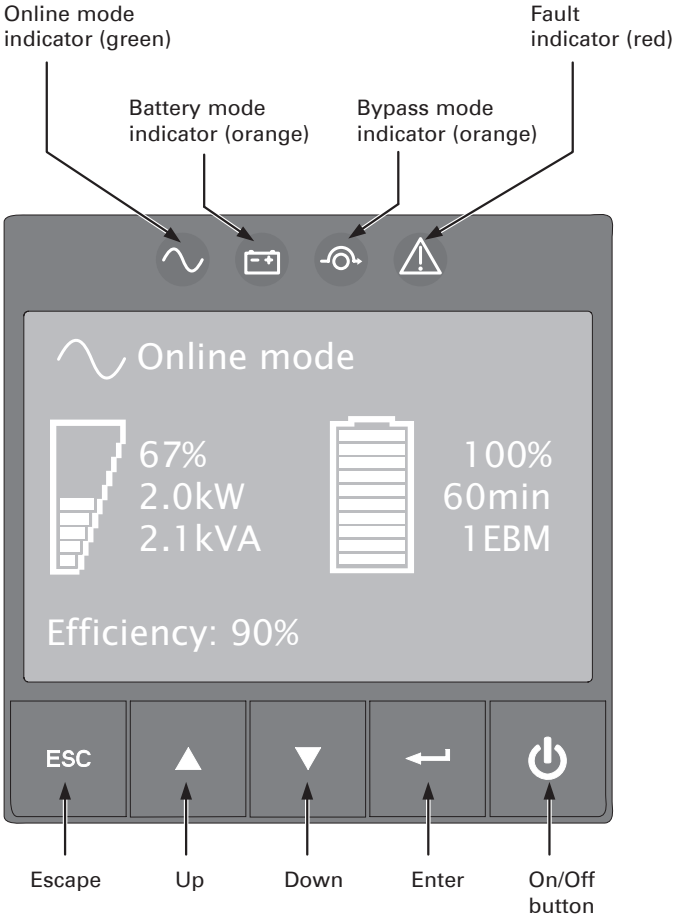

The following table shows the indicator status and description:

Indicator	Status	Description
Green	On	The UPS is operating normally on Online or on High Efficiency mode.
Orange	On	The UPS is on Battery mode.
Orange	On	The UPS is on Bypass mode.
Red	On	The UPS has an active alarm or fault. See trouble-shooting on page 38 for additional information.

2.5 LCD description

After 5 minutes of inactivity, the LCD displays the screen saver.

The LCD backlight automatically dims after 10 minutes of inactivity. Press any button to restore the screen.

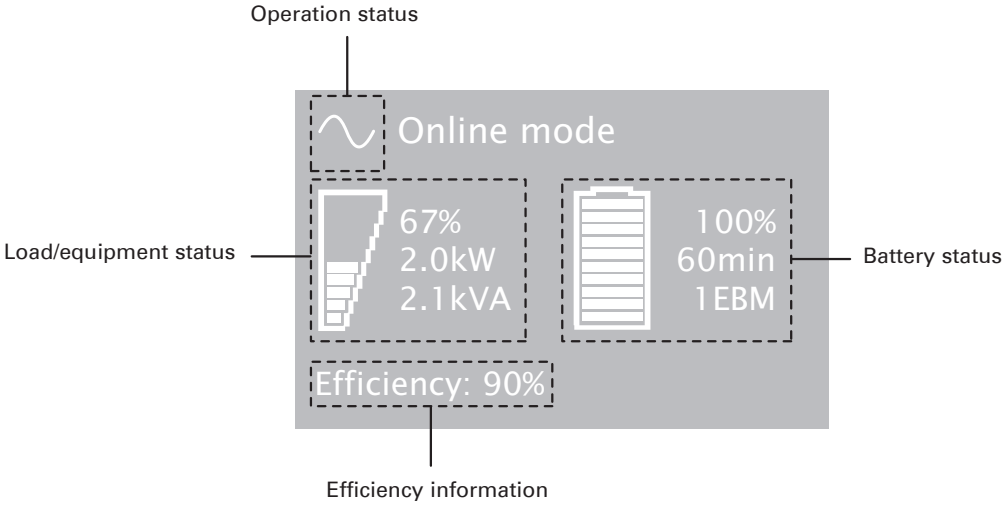

The following table describes the status information provided by the UPS

Note: If other indicator appears, see troubleshooting on page 38 for additional information.

Operation status	Cause	Description
Standby mode	The UPS is Off.	Equipment is not powered until ⏻ button is pressed.
Online mode	The UPS is operating normally.	The UPS is powering and protecting the equipment.
Battery mode 1 beep every 10 seconds	A utility failure has occured and the UPS is on Battery mode.	The UPS is powering the equipment with the battery power. Prepare your equipment for shutdown.
End of backup time 1 beep every 3 seconds	The UPS is on Battery mode and the battery is running low.	This warning is approximate, and the actual time to shutdown may vary significantly. Depending on the UPS load and number of Extended Battery Modules (EBMs), the "Battery Low" warning may occur before the battery reaches 20% capacity.
High Efficiency mode	The UPS is operating on High Efficiency mode.	The UPS is powering and protecting the equipment
Bypass mode	An overload or a fault has occurred, or a command has been received, and the UPS is in Bypass mode.	Equipment is powered but not protected by the UPS.

2. Presentation

2.6 Display functions

Press the Enter (↵) button to activate the menu options. Use the two middle buttons (▲ and ▼) to scroll through the menu structure. Press the Enter (↵) button to select an option. Press the ESC button to cancel or return to the previous menu.

Main menu	Submenu	Display information or Menu function
Measurements		[Load] W VA A pf / [Input/Bypass] V Hz / [Output/Efficiency] V Hz / [Battery] % min V n° / [DCbus] V / [Average power usage] Wh / [Cumulat. power usage] Wh since date
Control	Go to Bypass	Transfers the UPS on Bypass mode
	Start battery test	Starts a manual battery test
	Reset fault state	Clears active fault
	Restore factory set	Returns all settings to original values
	Reset average power	Clears average power usage measurement
	Reset cumul. power	Clears cumulated power usage measurement
	Dry contacts test	Tests dry contact relay outputs
Settings	Local settings	Sets product general parameters
	In/Out settings	Sets Output parameters
	On/Off settings	Sets On/Off conditions
	Battery settings	Sets battery configuration
Event log	Event filter	Selects faults, alarms and/or events to display
	Event list	Displays the events stored
	Reset event list	Clears events
Fault log	Fault list	Displays the faults stored
	Reset fault list	Clears faults
Identification		[Product type/model] / [Part/Serial number] / [UPS/NMC firmware] / [Com card IPv4], [Com card IPv6], [Com card MAC] / [Detected accessories]
Register product		Links to Eaton registration website

2.7 User settings

The following table displays the options that can be changed by the user.

	Submenu	Available settings	Default settings
Local settings	Language	[English] [Français] [Deutsch] [Español] [Русский] [Português] [Italiano] Menus, status, notices and alarms, UPS fault, Event Log data and settings are in all supported languages.	[English] User selectable when UPS is powered for the first time.
	Date/ time	Format: [International] [US]	[US]
	LCD	Modify LCD screen brightness and contrast to be adapted to room light conditions.	
	Audible alarm	[Enabled] [Disabled on battery] [Always disabled] Enable or disable the buzzer if an alarm occurs.	[Enabled]
In/Out settings	Output voltage	[200V] [208V] [220V] [230V] [240V] Can be changed only in Standby mode	[208V]
	Output frequency	Frequency converter: [Enabled] [Disabled] Frequency settable in frequency converter mode	Disabled
	Output mode	[Industrial] [Network] Set UPS behavior regarding transfer on Bypass	[Network]
	Input volt hysteresis	Sets input voltage hysteresis from 1 to 10V	[10V]
	High Efficiency mode	[Enabled] [Disabled] Power the output from Bypass for high efficiency	[Disabled]
	Bypass transfer	[Transfer if BP AC NOK] [Enabled] [Disabled] Allow transfer on Bypass out of tolerance	[Disabled]

	Submenu	Available settings	Default settings
In/Out settings	Interrupt time	If Bypass transfer is enabled, Interrupt time: [10ms] [20ms] Define break duration when transfer on Bypass	[10ms]
	Overload prealarm	[10%] ... [102%] Load % when overload alarm occurs	[102%]
	Redundancy mode	[Unitary UPS] [Hot Standby] Force slew rate value to 0.5Hz/s	Unitary UPS
On/Off settings	Cold start	[Enabled] [Disabled] Authorize the product to start on battery power.	[Enabled]
	Forced reboot	[Enabled] [Disabled] If mains recover during a shutdown sequence: If set to Enabled, shutdown sequence will complete and wait 10 seconds prior to restart, If set to Disabled, shutdown sequence will not complete and restart will occur immediately.	[Enabled]
	Auto restart	[Enabled] [Disabled] Authorize the product to restart automatically when mains recovers after a complete battery discharge.	[Enabled]
	Auto start	[Enabled] [Disabled] The UPS automatically starts up as soon as mains power is available (no need topress the ⏻ button).	[Disabled]
	Energy saving	[Disabled] [100W] ... [1000W] If Enabled, UPS will shutdown after 5 min. of back-up time, if load is less than threshold.	[Disabled]
	Sleep mode	[Enabled] [Disabled] If Disabled, LCD and communication will turn OFF immediately after UPS is OFF. If Enabled, LCD and communication stays ON 1h30 min after UPS is OFF.	[Enabled]
	Remote command	[Enabled] [Disabled] If Enabled, shutdown or restart commands from software are authorized.	[Enabled]
	Bypass standby	[Enabled] [Disabled] Define if output is powered from Bypass in Standby mode.	[Disabled]
Battery settings	Automatic battery test	In constant charge mode: [No test] [Every day] [Every week] [Every month] In ABM cycling mode : [No test] [Every ABM cycle]	[Every ABM cycle]
	Low battery warning	[0%] ... [100%] The alarm triggers when the set percentage of battery capacity is reached during back-up time.	[20%]
	Restart bat. level	[0%] ... [100%] If set, automatic restart will occur only when percentage of battery charge is reached.	[0%]
	Battery charge mode	[ABM cycling] [Constant charge]	[ABM cycling]
	External battery	[Auto detection] [Manual EBM set.] [Manual battery set.] [No battery]	[Auto detection] Using standard EBM, UPS detects automatically the number of EBM connected
	Deep Disch. protect.	[Yes] [No] If set to Yes, the UPS automatically prevents battery from deep discharge by adapting end of back-up time voltage threshold. Warranty void if set to No.	[Yes]

3. Installation

3.1 Inspecting the equipment

If any equipment has been damaged during shipment, keep the shipping cartons and packing materials for the carrier or place of purchase and file a claim for shipping damage. If you discover damage after acceptance, file a claim for concealed damage.

To file a claim for shipping damage or concealed damage:

1. File with the carrier within 15 days of receipt of the equipment;

2. Send a copy of the damage claim within 15 days to your service representative.

Check the battery recharge date on the shipping carton label. If the date has passed and the batteries were never recharged, do not use the UPS. Contact your service representative.

3.2 Unpacking the cabinet

- Unpacking the cabinet in a low-temperature environment may cause condensation to occur in and on the cabinet. Do not install the cabinet until the inside and outside of the cabinet are absolutely dry (hazard of electric shock).
- The cabinet is heavy (see page 41). Follow Special precautions provided on page 4 and on the carton.

Unpack the equipment and remove all the packing materials and shipping carton.

Note: Do not lift the UPS or EBM from the front panel.

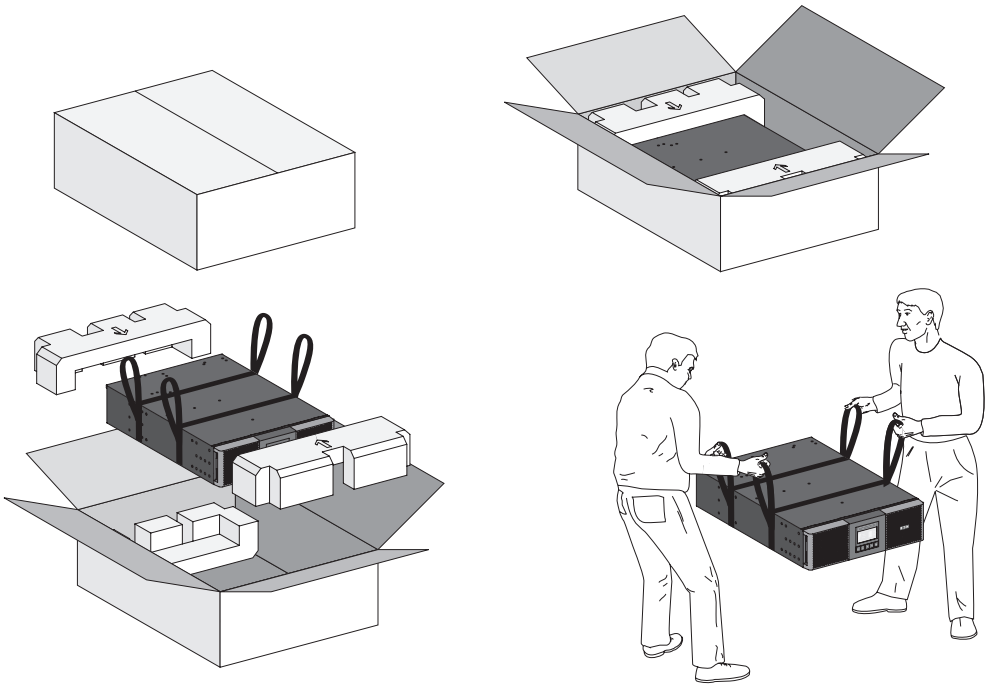

Unpacking UPS and Extended Battery Module.

Discard or recycle the packaging in a responsible manner, or store it for future use.

Place the cabinet in a protected area that has adequate airflow and is free of humidity, flammable gas, and corrosion.

Packing materials must be disposed of in compliance with all local regulations concerning waste. Recycling symbols are printed on the packing materials to facilitate sorting.

3.3 Checking the accessory kit

- Verify that the following additional items are included with the UPS:

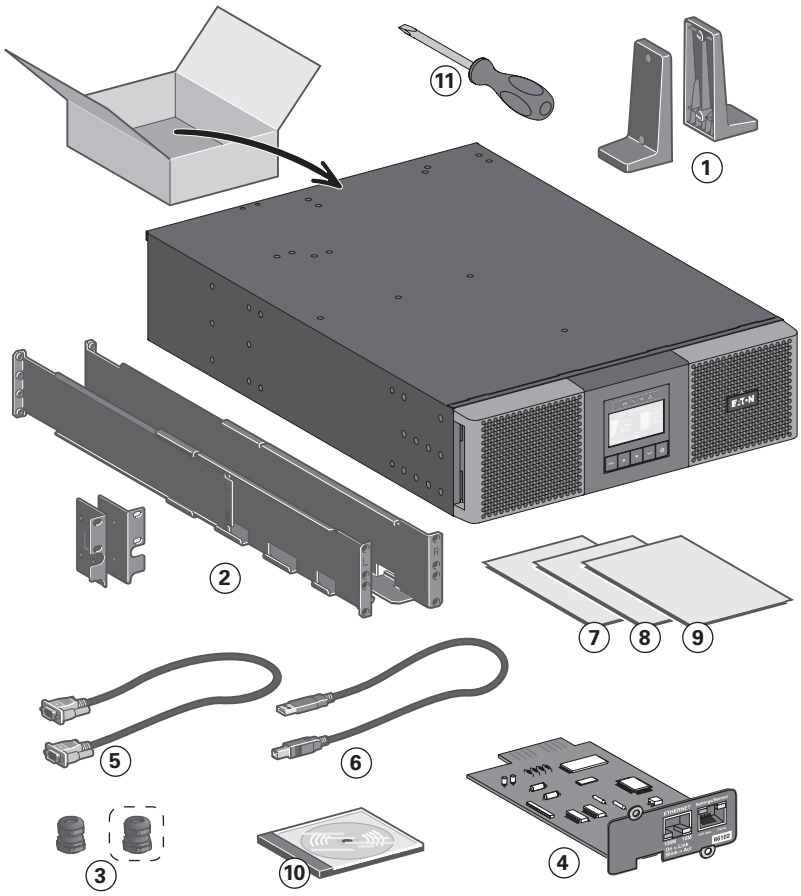

1. (2)Tower stands
2. Rack kit for 19-inch enclosures
3. Cable gland for Output connection
   Additional cable gland for Input
4. Network card-MS communication card
5. RS232 communication cable
6. USB communication cable
7. User manual
8. Safety instructions
9. Warranty sheet
10. Software CD-ROM
11. Screwdriver

- If you ordered an optional Extended Battery Module (EBM), verify that the following additional items are included with the EBM:

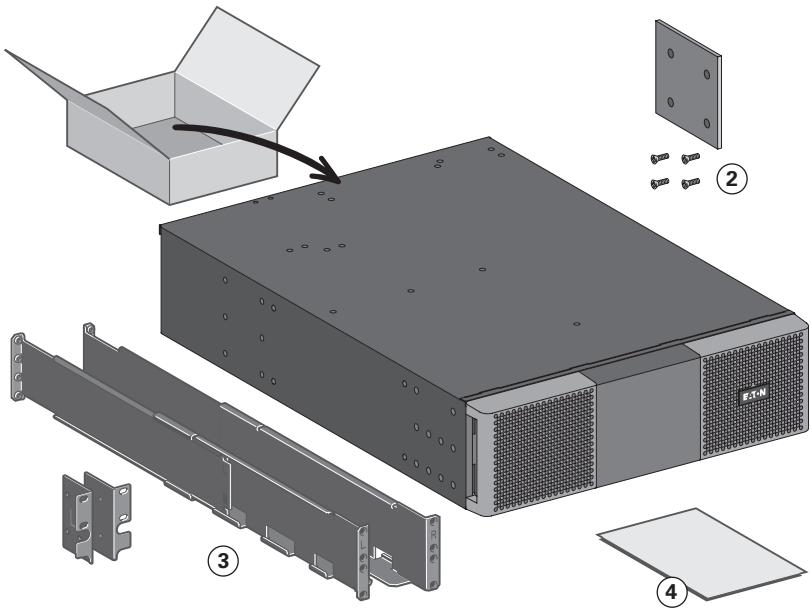

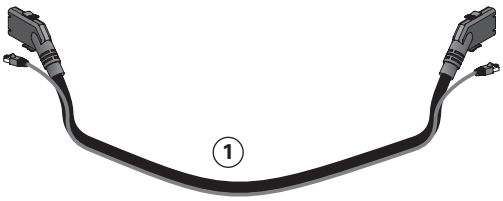

1. Battery power cable, attached with battery detection cable
2. Stabilizer bracket (4 screws included)
3. Rack kit for 19-inch enclosures
4. EBM Installation manual

Discard the EBM user's guide if you are installing the EBM with a new UPS at the same time.
Use the UPS user's guide to install both the UPS and the EBM.

If you ordered other UPS accessories, refer to specific user manuals to check the packing contents.

3. Installation

3.4 Connecting the internal battery

Do not make unauthorized changes to the UPS; otherwise, damage may occur to your equipment and void your warranty.
Do not connect the UPS to utility until installation is completed.

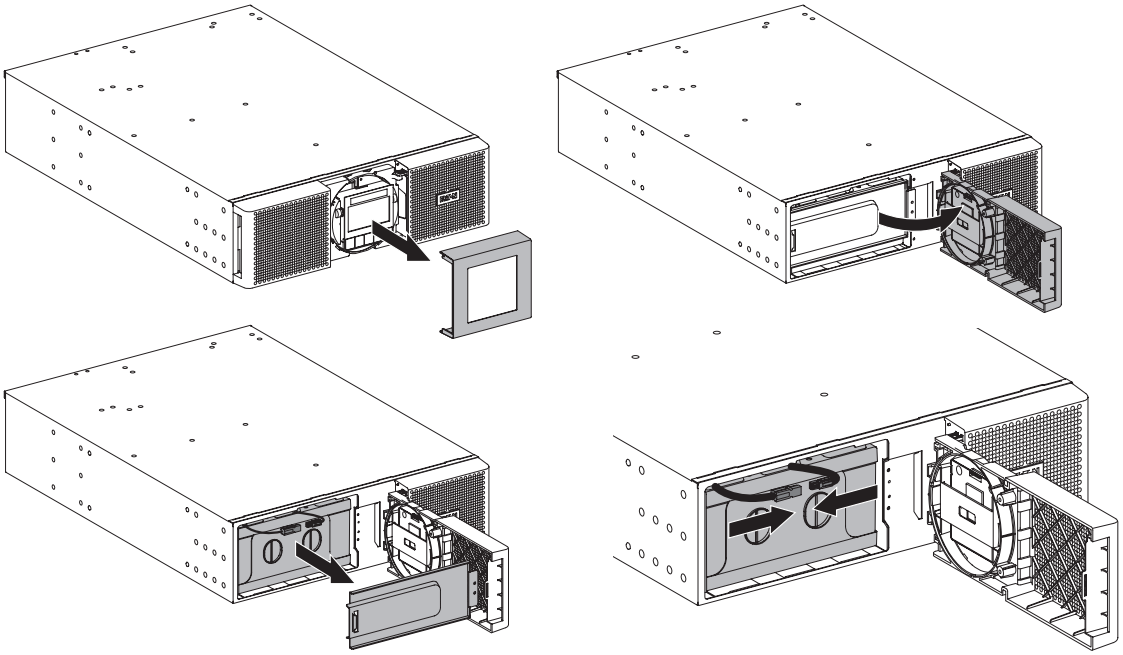

To install the UPS:

1. Remove the center cover of the front panel
2. Remove the two screws to open the left side of the front panel
3. Remove the two screws to pull out the metal protection cover of the battery

A ribbon cable connects the LCD control panel to the UPS. Do not pull on the cable or disconnect it.

A small amount of arcing may occur when connecting the internal batteries. This is normal and will not harm personnel. Connect the cables quickly and firmly.

4. Connect the two battery connectors together.
5. Screw back the metal protection cover and the front panel, then clip the center cover.

3.5 Connecting the EBM(s)

A small amount of arcing may occur when connecting an EBM to the UPS. This is normal and will not harm personnel. Insert the EBM cable into the UPS battery connector quickly and firmly.

1. Plug the EBM power cable(s) into the battery connector(s). Up to 12 EBMs may be connected to the UPS.
2. Verify that the EBM connections are tight and that adequate bend radius and strain relief exist for each cable.
3. Connect the battery detection cable(s) to the connector of the UPS and of the EBM(s).

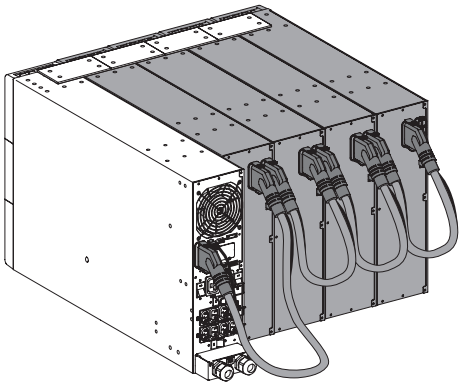

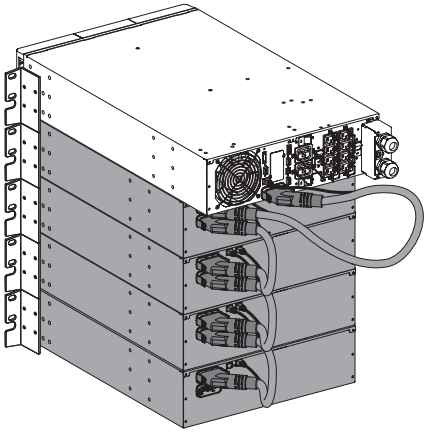

3.6 Connecting other accessories

If you ordered other UPS accessories, refer to specific user manuals to check the connection to the UPS.

3. Installation

3.7 Tower installation

If you ordered other UPS accessories, refer to specific user manuals to check the tower installation with the UPS.

To install the cabinet:

1. Place the UPS on a flat, stable surface in its final location.
2. Always keep 150 mm of free space behind the UPS rear panel.
3. If installing additional cabinets, place them next to the UPS in their final location.

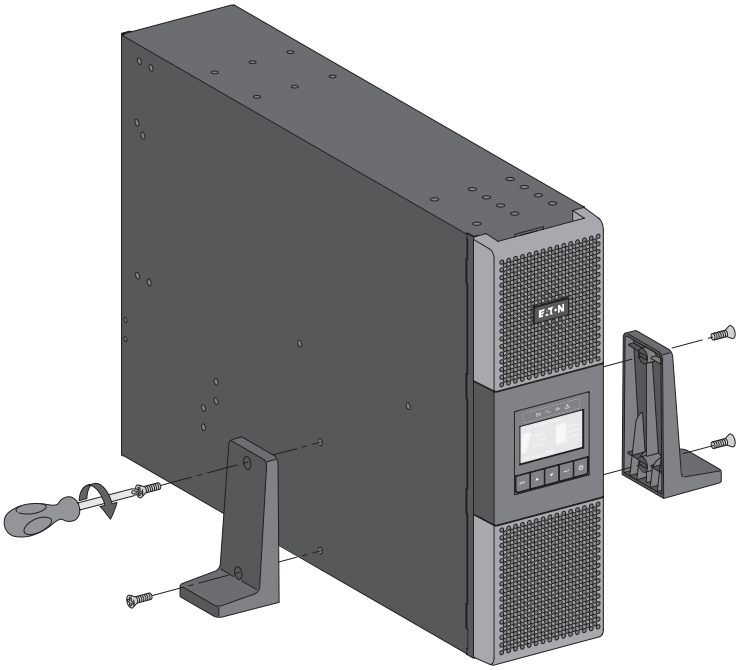

- Adjustment of the orientation of the LCD panel and of the logo.

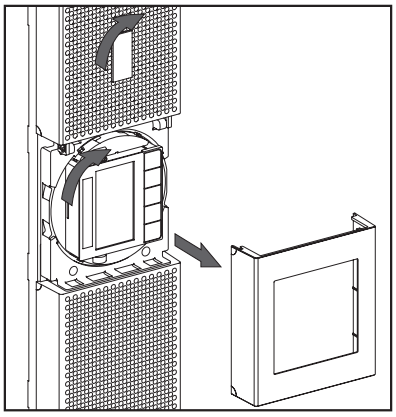

- Adjustment of the angle of vision of the LCD panel.

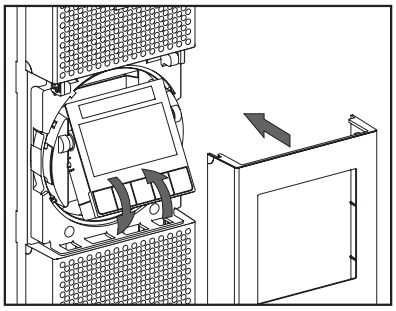

3.8 Rack installation

If you ordered other UPS accessories, refer to specific user manuals to check the rack installation with the UPS.

- Prepare UPS for rack mounting.

This step requires two people.

The UPS is heavy. To ease its rack mounting, you can remove the battery pack from the UPS as explained below.

1. Remove the center cover of the front panel
2. Remove the two screws to open the left side of the front panel
3. Remove the two screws to pull out the metal protection cover of the battery

A ribbon cable connects the LCD control panel to the UPS. Do not pull on the cable or disconnect it.

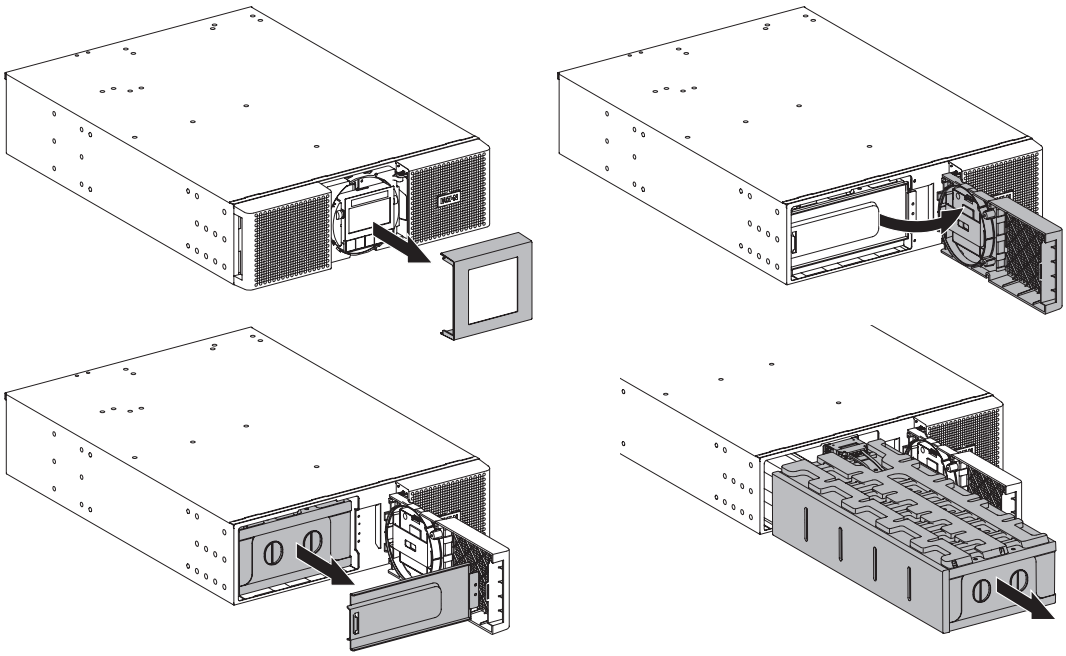

4. Pull out the plastic handle of the battery pack, and slide the pack out slowly on to a flat and stable surface. Use two hands to support the battery pack. Set it aside for reinstalling after that the UPS is rack mounted.
5. Mount the UPS on rack
6. Put back the battery pack, screw back the metal protection cover and the front panel, then clip the center cover.

3. Installation

- Rack mounting of UPS, EBM, and accessory modules.

Follow steps 1 to 4 for module mounting on the rails.

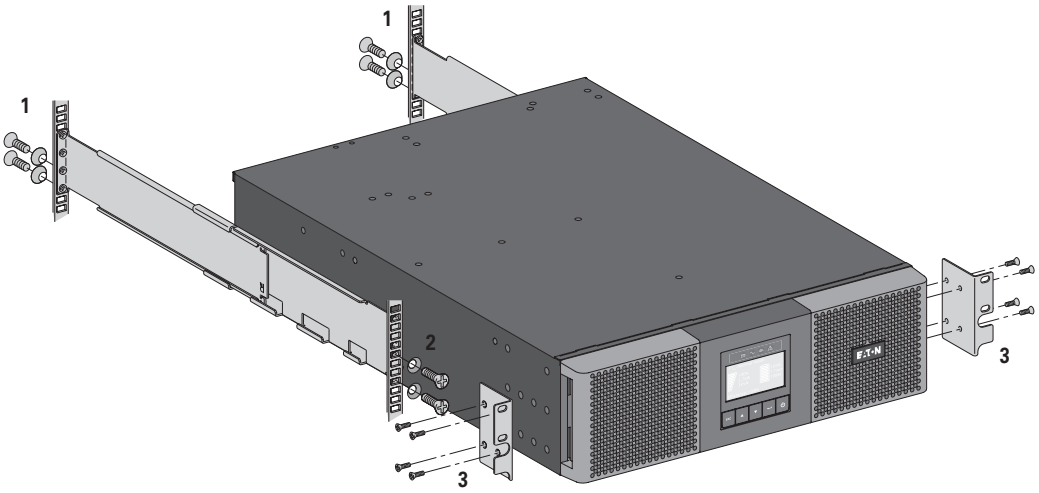

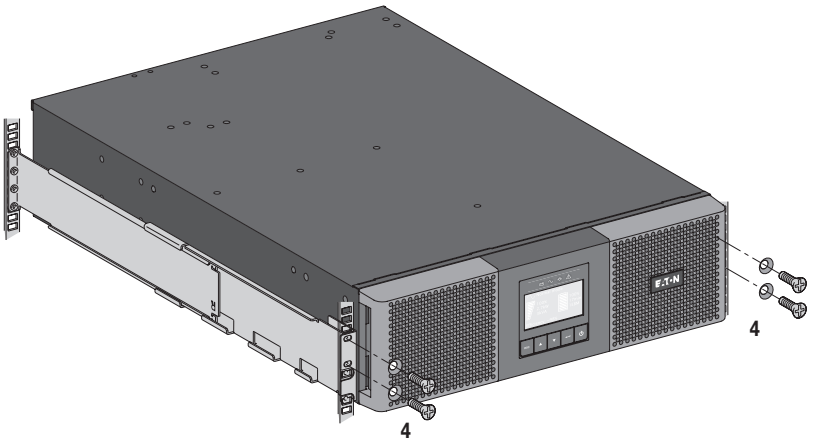

The rails and necessary hardware are supplied by EATON.

3.9 Installation requirements

Recommended protective devices and cable cross-sections

1. Recommended upstream protection

UPS power rating	Upstream circuit breaker
9PX3K3U	D curve – 30A

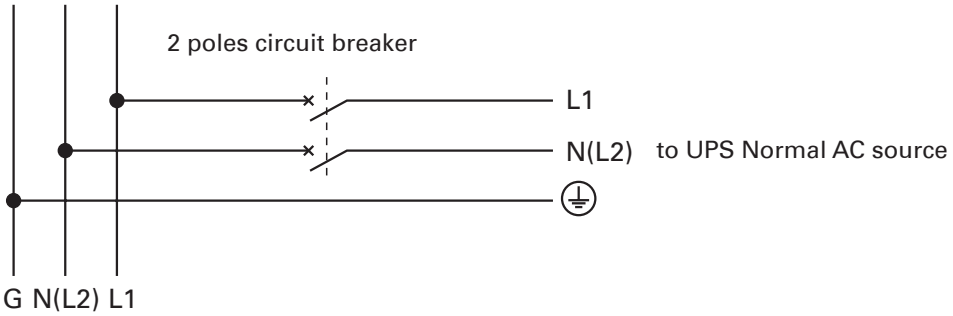

2. Recommended cable cross-sections

Terminal position	Wire function	Terminal wire size rating	Minimum input wire size	Tightening torque
L1	Phase	4-16 mm² (12-6 AWG)	6 mm² (10 AWG) 105°C 10 mm² (8 AWG) 75°C	10 lb in / 1.13 Nm
N(L2)	Neutral (Phase)			
⏚	Ground			

Copper wire, solid or stranted.

4. Power cables connection

4.1 Access to terminal blocks

1. Remove the terminal blocks cover (one screw)
2. Punch the knockouts and insert the cables/conduits inside

Note: the L6-30P input power cable is attached by Eaton.

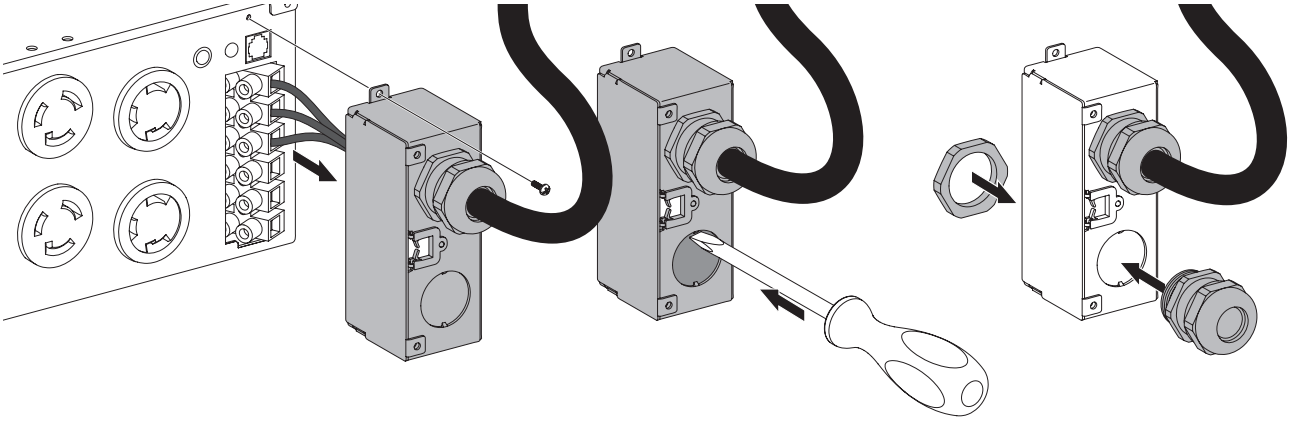

- **High leakage current:**
  Earth connection essential before connecting supply.

4.2 Input/Output connection

This type of connection must be carried out by qualified electrical personnel
Before carrying out any connection, check that the upstream protection device (Normal AC source) is open "O" (Off). **Always connect the ground wire first**

If you ordered a HotSwap MBP or a PPDM, refer to the specific user manual to check the terminal blocks connection of the UPS with this accessory.

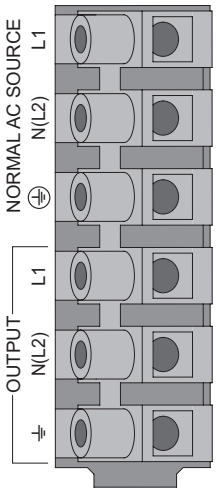

1. Insert the Normal AC cable through the cable gland.
2. Connect the three cables to the Normal AC source terminal blocks.
3. Insert the Output cable through the cable gland.
4. Connect the three cables to the Output terminal blocks.
5. Put back and secure the terminal blocks cover with the screw.
6. Tighten the cable glands.

5.1 UPS startup and shutdown

If you ordered a HotSwap MBP or a PPDM, refer to the specific user manual to check the startup sequence of the UPS with this accessory.

Starting the UPS

Verify that the total equipment ratings do not exceed the UPS capacity to prevent an overload alarm.

To start the UPS:

1. Verify that the internal batteries are connected. See "Connecting the internal battery" on page 17
2. If optional EBMs are installed, verify that the EBM are connected to the UPS.
   See "Connecting the EBM(s)" on page 19.
3. Verify that the UPS terminal blocks are connected to AC source.
4. Set the upstream circuit breaker (not provided) to the "I" position (On) to switch on the utility power.
   The UPS front panel display illuminates and shows EATON logo.
5. Verify that the UPS status screen shows ⏻, press ⏻ to start.
6. Press the ⏻ button on the UPS front panel for at least 3 seconds.
   The UPS front panel display changes status to "UPS starting...".
7. Check the UPS front panel display for active alarms or notices. Resolve any active alarms before continuing. See "Troubleshooting" on page 38.
   If the ⚠ indicator is on, do not proceed until all alarms are clear. Check the UPS status from the front panel to view the active alarms. Correct the alarms and restart if necessary.
8. Verify that the ∿ indicator illuminates solid, indicating that the UPS is operating normally and powering the output.
   The UPS should be in Online mode.

The internal batteries charge to 90% capacity in less than 3 hours. However, Eaton recommends that the batteries charge for 48 hours after installation or long-term storage.

Starting the UPS on Battery

Before using this feature, the UPS must have been powered by utility power with output enabled at least once. Battery start can be disabled. See Coldstart setting in user settings on page 14.

To start the UPS on battery:

1. Press the ⏻ button on the UPS front panel until the UPS front panel display illuminates and shows a status of "UPS starting...".
   The UPS cycles through Standby mode to Battery mode. The ▭ indicator illuminates solid.
   The UPS supplies power to your equipment.
2. Check the UPS front panel display for active alarms or notices. Resolve any active alarms before continuing. See "Troubleshooting" on page 38.
   Check the UPS status from the front panel to view the active alarms. Correct the alarms and restart if necessary.

UPS shutdown

To shut down the UPS:

1. Press the ⏻ button on the UPS front panel. The UPS transfers to Standby mode.
2. Set the upstream circuit breaker (not provided) to the "O" position (Off) to switch off the utility power.

5. Operation

5.2 Operating modes

The Eaton 9PX front panel indicates the UPS status through the UPS indicators, see page 14.

Online mode

During Online mode, the indicator illuminates solid and the UPS is powered from the utility.
The UPS monitors and charges the batteries as needed and provides filtered power protection to your equipment. Optional High Efficiency and Energy Saving settings minimize heat contribution to the rack environment. See user settings on page 14.

Battery mode

When the UPS is operating during a power outage, the alarm beeps once every ten seconds and the indicator illuminates solid. The necessary energy is provided by the battery.
When the utility power returns, the UPS transfers to Online mode operation while the battery recharges.
If battery capacity becomes low while in Battery mode, the audible alarm beeps once every 3 seconds. This warning is approximate, and the actual time to shutdown may vary significantly.
Shutdown all applications on the connected equipment because automatic UPS shutdown is imminent.
When utility power is restored after the UPS shuts down, the UPS automatically restarts.

Bypass mode

In the event of a UPS overload or internal failure, the UPS transfers your equipment to utility power. Battery mode is not available and your equipment is not protected; however, the utility power continues to be passively filtered by the UPS. The indicator illuminates.
Depending on overload conditions, the UPS remains in Bypass mode for at least 5 seconds and will stay in this mode if three transfers to Bypass occur within 20 minutes.
The UPS transfers to Bypass mode when:

- the user activates Bypass mode through the front panel.
- the UPS detects an internal failure.
- the UPS has an overtemperature condition.
- the UPS has an overload condition listed in table 6 on page 42.

The UPS shuts down after a specified delay for overload conditions listed in table 6 on page 42.
The UPS remains on to alarm the fault

Standby mode

When the UPS is turned-off and remains connected to AC source, the UPS is in Standby mode.
Depending if Bypass Standby setting is enabled, the output is powered but not protected.
The battery recharges when necessary and the communication ports are powered.

5.3 Transferring the UPS between modes

From Online (or Battery) to Bypass mode. Press any button to activate the menu options, then select Control and Go to Bypass.
From Bypass to Online (or Battery) mode. Press any button to activate the menu options, then select Control and Go back normal.

5.4 Setting High Efficiency mode

In High Efficiency mode, the UPS operates normally on Bypass and transfers to Online (or Battery) mode in less than 10 ms when utility fails. Transfers to High Efficiency mode will be active after 5 minutes of Bypass voltage monitoring: if Bypass quality is not in tolerance, then the UPS will remain in Online mode.

Eaton recommends to use the HE mode only to protect I/T equipment.

To set the High Efficiency mode:

1. Put the UPS on Bypass: press any button to activate the menu options, select Control and Go to Bypass.
2. Then press Escape and select Settings, In/Out settings, and High Efficiency mode.
3. Select Enabled and Enter to confirm.
4. The UPS transfers to High Efficiency mode in 5 minutes.

5.5 Configuring Bypass settings

The following settings are available for configuring Bypass operation.

Bypass transfer out of tolerance

1. Press any button to activate the menu options, then select Settings, Output settings, and Bypass transfer.
2. Select Enabled or Disabled for BP AC NOK, and Enter to confirm.
   If Enabled, the UPS transfers to Bypass even if Bypass AC source is out of tolerance, depending on output mode. If Disabled, the UPS output is shutdown.

Interrupt time

This setting is displayed to define the break duration during transfer to Bypass, only if transfer out of tolerance is enabled. 10 ms or 20 ms can be selected.

5.6 Configuring battery settings

Automatic battery test

Automatic battery tests are done every week in constant charging mode and at each cycle in ABM mode. The tests frequency can be modified.
During the test, the UPS transfers to Battery mode and discharges the batteries for 25 seconds under load.

Battery mode is not displayed and battery low alarm does not activate during a battery test.

The battery test may be cancelled due to bad conditions, or failed.

Low battery warning

During discharge, the low battery alarm is activated if the battery capacity goes below 20%.
This threshold can be modified.

External battery setting

The number of Extended Battery Module is automatically detected, or can be set manually in number of EBM or in Ah.

Deep discharge protection

This setting is recommended to avoid damaging the battery. Warranty is void if deep discharge protection is disabled.

5.7 Retrieving the Event log

To retrieve the Event log through the display:

1. Press any button to activate the menu options, then select Event log.
2. Scroll through the listed events.

5.8 Retrieving the Fault log

To retrieve the Fault log through the display:

1. Press any button to activate the menu options, then select Fault log.
2. Scroll through the listed faults.

6.1 Communication ports

- **RS232 or USB communication ports**

The RS232 and USB communication ports cannot operate simultaneously.

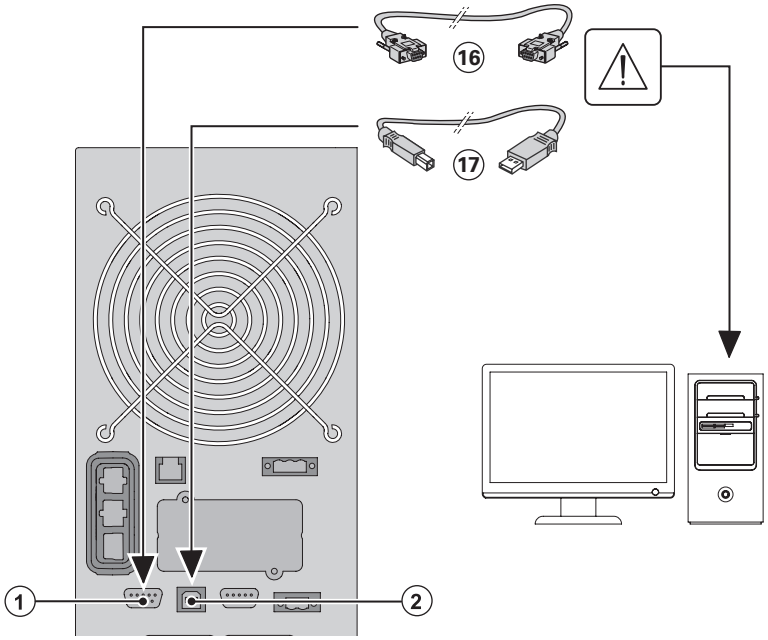

1. Connect the RS232 ⑯ or USB ⑰ communication cable to the serial or USB port on the computer.

2. Connect the other end of the communication cable ⑯ or ⑰ to the RS232 ① or USB ② communication port on the UPS.

The **UPS** can now communicate with EATON power management software.

- **Relay output contacts**

The UPS incorporates four relay outputs; each information is available with a close or open contact.

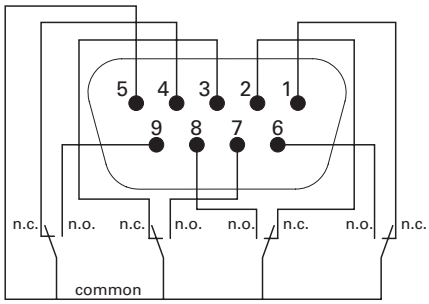

Status active information: (if contact between pin and common is closed)

- Pin 1: not on Bypass
- Pin 2: load not protected
- Pin 3: not low battery
- Pin 4: not on Battery
- Pin 5: user common
- Pin 6: on Bypass
- Pin 7: low battery
- Pin 8: load protected
- Pin 9: on Battery
- n.o.: contact normally open
- n.c.: contact normally closed

The relay output contacts must not be connected to any utility connected circuits.
Reinforced insulation to the utility is required. The relay output contacts have a maximum rating of 250 Vac/5A.

6. Communication

- **Remote On/Off**

Remote On/Off allows remote action of ⏻ button to switch On/Off the UPS.

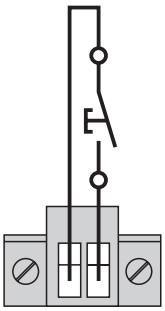

Normally open

When contact changes from open to closed, the UPS is switched-on (or stays On).
When contact changes from closed to open, the UPS is switched-off (or stays Off).

On/Off control via ⏻ button has priority over the remote control.

- **Remote Power Off**

RPO is used to shutdown the UPS remotely. This feature can be used for shutting down the load and the UPS by thermal relay, for instance in the event of room over temperature. When RPO is activated, the UPS shuts down the output and all its power converters immediately. The UPS remains on to alarm the fault.

The RPO circuit is an IEC 60950 safety extra low voltage (SELV) circuit. This circuit must be separated from any hazardous voltage circuits by reinforced insulation.

- The RPO must not be connected to any utility connected circuits. Reinforced insulation to the utility is required. The RPO switch must have a minimum rating of 27 Vdc and 20 mA and be a dedicated latching-type switch not tied into any other circuit. The RPO signal must remain active for at least 250 ms for proper operation.
- To ensure the UPS stops supplying power to the load during any mode of operation, the input power must be disconnected from the UPS when the Remote Power Off function is activated.

Leave the RPO connector installed in the RPO port on the UPS even if the RPO function is not needed.

RPO connections:

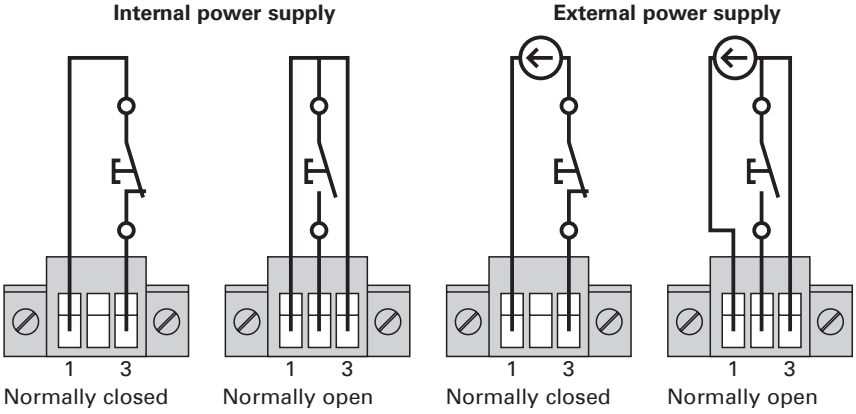

Terminal wire size rating is 0.32-4 mm² (22-12 AWG).
Suggested wire size is 0.82 mm² (18 AWG).

Remote control connection and test

1. Check the UPS is shut down and the electrical supply network disconnected.
2. Remove RPO connector from the UPS by unfitting the screws.
3. Connect a normally closed volt-free contact between the two pins of connector.

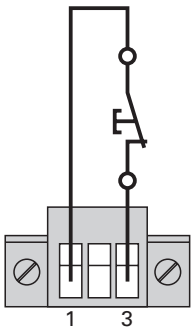

Normally closed

Contact open: shut down of UPS
To return to normal operation, deactivate the external remote shut down contact and restart the UPS from the front panel.

4. Plug the RPO connector into the back of the UPS and fix the screws.
5. Connect and restart the UPS according to the previously described procedures.
6. Activate the external remote shut down contact to test the function.

Always test the RPO function before applying your critical load to avoid accidental load loss.

• Connectivity Cards

Connectivity cards allow the UPS to communicate in a variety of networking environments and with different types of devices. The 9PX models have one available communication bay for the following connectivity cards:

- **Network-MS card** - has SNMP and HTTP capabilities as well as monitoring through a Web browser interface; connects to Ethernet network. In addition, a Environmental Monitoring Probe can be attached to obtain humidity, temperature, smoke alarm, and security information.
- **Modbus-MS card** - has connection to Modbus protocol in addition to network management.
- **Relay-MS card** - has isolated dry contact (Form-C) relay outputs for UPS status: Utility failure, Battery low, UPS alarm/OK, or on Bypass.

See on page 21 for the location of the communication bay.

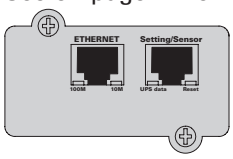

Network-MS card

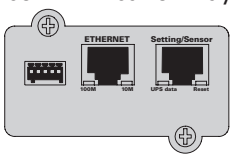

Modbus-MS card

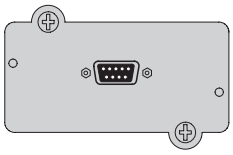

Relay-MS card

6. Communication

Installation of the communication cards

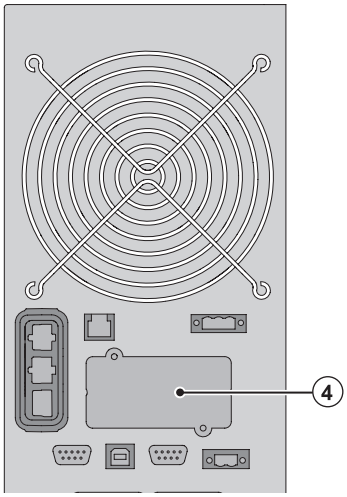

It is not necessary to shutdown the UPS before installing a communication card.

1. Remove the slot cover ④ secured by screws.
2. Insert the communication card in the slot.
3. Secure the card cover with the 2 screws.

6.2 Eaton Intelligent Power Software suite

Each 9PX UPS ships with Eaton Intelligent Power Software suite. To begin installing, see the instructions accompanying the Software suite CD.

Eaton Software suite provides up-to-date graphics of UPS power and system data and power flow.

It also gives you a complete record of critical power events, and it notifies you of important UPS or power information.

If there is a power outage and the 9PX UPS battery power becomes low, Eaton Software suite can automatically shut down your computer system to protect your data before the UPS shutdown occurs.

7. UPS maintenance

7.1 Equipment care

For the best preventive maintenance, keep the area around the equipment clean and dust free.
If the atmosphere is very dusty, clean the outside of the system with a vacuum cleaner.
For full battery life, keep the equipment at an ambient temperature of 25°C (77°F).

If the UPS requires any type of transportation, verify that the UPS is disconnected and turned off and then disconnect the UPS internal battery connector (see on page 35).
The batteries are rated for a 3-5 year service life. The length of service life varies, depending on the frequency of usage and ambient temperature. Batteries used beyond expected service life will often have severely reduced runtimes. Replace batteries at least every 4 years to keep units running at peak efficiency.

7.2 Storing the equipment

If you store the equipment for a long period, recharge the battery every 6 months by connecting the UPS to utility power. The internal batteries charge to 90% capacity in less than 3 hours.
However, Eaton recommends that the batteries charge for 48 hours after long-term storage.
Check the battery recharge date on the shipping carton label.
If the date has passed and the batteries were never recharged, do not use them. Contact your service representative.

7.3 When to replace batteries

When the battery replacement screen is displayed, it is recommended to replace the batteries.
Contact your service representative to order new batteries.

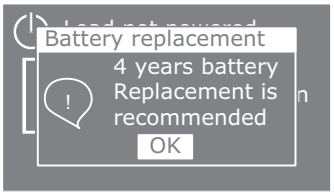

7. UPS maintenance

7.4 Replacing batteries

DO NOT DISCONNECT the batteries while the UPS is in Battery mode.

Batteries can be replaced easily without turning off the UPS or disconnecting the load.
If you prefer to remove input power to change the batteries, see "UPS Shutdown" on page 25.

Consider all warnings, cautions, and notes before replacing batteries.

- Servicing should be performed by qualified service personnel knowledgeable of batteries and required precautions. Keep unauthorized personnel away from batteries.
- Batteries can present a risk of electrical shock or burn from high short circuit current. Observe the following precautions:
  1. Remove watches, rings, or other metal objects,
  2. Use tools with insulated handles,
  3. Do not lay tools or metal parts on top of batteries,
  4. Wear rubber gloves and boots.
- When replacing batteries, replace with the same type and number of batteries or battery packs. Contact your service representative to order new batteries.
- Proper disposal of batteries is required. Refer to your local codes for disposal requirements.
- Never dispose of batteries in a fire. Batteries may explode when exposed to flame.
- Do not open or mutilate the battery or batteries. Released electrolyte is harmful to the skin and eyes and may be extremely toxic.
- Determine if the battery is inadvertently grounded. If inadvertently grounded, remove source from ground. Contact with any part of a grounded battery can result in electrical shock. The likelihood of such shock can be reduced if such grounds are removed during installation and maintenance (applicable to equipment and remote battery supplies not having a grounded supply circuit).
- ELECTRIC ENERGY HAZARD. Do not attempt to alter any battery wiring or connectors. Attempting to alter wiring can cause injury.
- Disconnect charging source prior to connecting or disconnecting battery terminals.

- **Replacing the internal battery**

The internal battery is heavy. Use caution when handling the heavy batteries.

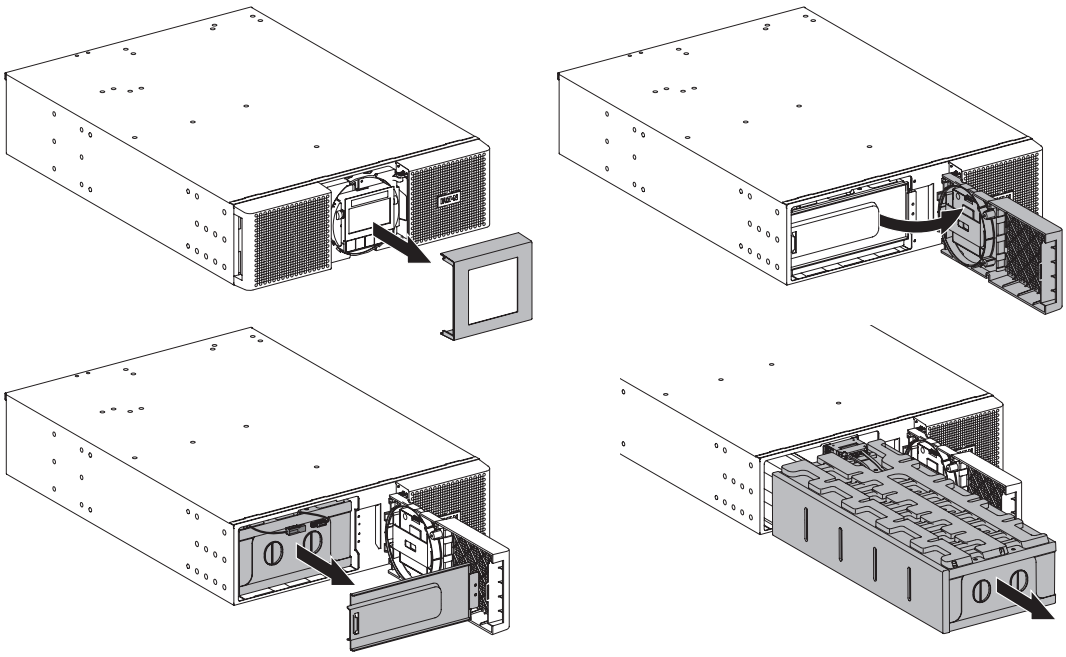

To replace the battery pack:

1. Remove the center cover of the front panel
2. Remove the two screws to open the left side of the front panel
3. Remove the two screws to pull out the metal protection cover of the battery

A ribbon cable connects the LCD control panel to the UPS. Do not pull on the cable or disconnect it.

4. Pull out the plastic handle of the battery pack, and slide the pack out slowly on to a flat and stable surface. Use two hands to support the battery pack. See "Recycling the used equipment" on page 37 for proper disposal.
5. Verify that the replacement batteries have the same rating as the batteries being replaced.
6. Put the new battery pack into the UPS. Push the battery pack firmly to ensure a proper connection.
7. Screw back the metal protection cover and the front panel, then clip the center cover.
8. Continue to “Testing new batteries” on page 36.

7. UPS maintenance

- **Replacing the EBM(s)**

The EBM is heavy. Lifting the cabinet into a rack requires a minimum of two people.

To replace the EBM(s):

1. Unplug the EBM power cable and battery detection cable from the UPS.
   If additional EBM(s) are installed, unplug the EBM power cable and battery detection cable from each EBM.
2. Replace the EBM(s). See "Recycling the used equipment" on page 37 for proper disposal.

A small amount of arcing may occur when connecting an EBM to the UPS. This is normal and will not harm personnel. Insert the EBM cable into the UPS battery connector quickly and firmly.

3. Plug the EBM cable(s) into the battery connector(s). Up to twelve EBMs may be connected to the UPS.
4. Verify that the EBM connections are tight and that adequate bend radius and strain relief exist for each cable.
5. Connect the battery detection cable(s) to the connector of the UPS and of the EBM(s).

- **Testing new batteries**

To test new batteries:

1. Charge the batteries for 48 hours.
2. Press any button to activate the menu options.
3. Select Control then Start battery test.
   The UPS starts a battery test if the batteries are fully charged, the UPS is in Normal mode with no active alarms, and the bypass voltage is acceptable.
   During the battery test, the UPS transfers to Battery mode and discharges the batteries for 25 seconds. The front panel displays "Battery test in progress" and the percentage of the test completed.

7.5 Replacing the UPS equipped with a HotSwap MBP or with a PPDM

The HotSwap MBP as well as the PPDM allows to service or replace the UPS without interrupting the connected loads.

Refer to the specific user manual for more information about this accessory.

- **Replacing the UPS equipped with a HotSwap MBP.**

To remove the UPS:

1. Press any button to activate the menu options. Select Control then Go to Bypass.
2. Check that the UPS is in Bypass mode (Bypass LED should be On).
3. Turn the HotSwap MBP switch to the Bypass position: the red LED on the HotSwap MBP goes On, indicating that the load is now powered directly from utility power.
4. Set the Normal AC source switch on the HotSwap MBP to the "O" position and wait for 30s.
5. The UPS stops and can now be disconnected.

To reinstall the UPS:

1. Check that the UPS is correctly connected to the HotSwap MBP.
2. Set the Normal AC source switch on the HotSwap MBP to the "I" position.
3. Press the ⏻ button to switch On the UPS.
4. Select Control then Go to Bypass (Bypass LED should be On).
5. Turn the HotSwap MBP switch to the Normal position: the red LED on the HotSwap MBP goes Off, indicating that the load is now powered by the UPS.
6. Select Control then Go back normal.
7. Check that the UPS is in Online mode: the load is now protected by the UPS. (Online LED should be On).

- **Replacing the UPS equipped with a PPDM.**

To remove the UPS:

1. Press any button to activate the menu options. Select Control then Go to Bypass.
2. Check that the UPS is in Bypass mode (Bypass LED should be On).
3. Remove the center cover of the PPDM front panel.
4. Turn the PPDM switch to the Bypass position: the load is now powered directly from utility power.
5. Press the ⏻ button to switch Off the UPS.
6. The UPS is in Standby mode and can now be disconnected.

To reinstall the UPS:

1. Check that the UPS is correctly connected to the PPDM.
2. Press the ⏻ button to switch On the UPS.
3. Select Control then Go to Bypass.
4. Check that the UPS is in Bypass mode (Bypass LED should be On).
5. Turn the PPDM switch to the Normal position: the load is now powered by the UPS.
6. Clip back the center cover of the PPDM front panel.
7. Select Control then Go back normal.
8. Check that the UPS is in Online mode: the load is now protected by the UPS.

7.6 Recycling the used equipment

Contact your local recycling or hazardous waste center for information on proper disposal of the used equipment.

- Do not dispose of the battery or batteries in a fire. Batteries may explode. Proper disposal of batteries is required. Refer to your local codes for disposal requirements.
- Do not open or mutilate the battery or batteries. Released electrolyte is harmful to the skin and eyes. It may be toxic.

Pb

Do not discard the UPS or the UPS batteries in the trash. This product contains sealed, lead acid batteries and must be disposed of properly. For more information, contact your local recycling/reuse or hazardous waste center.

Do not discard waste electrical or electronic equipment (WEEE) in the trash. For proper disposal, contact your local recycling/reuse or hazardous waste center.

8. Troubleshooting

The Eaton 9PX is designed for durable, automatic operation and also alerts you whenever potential operating problems may occur. Usually the alarms shown by the control panel do not mean that the output power is affected. Instead, they are preventive alarms intended to alert the user.

- Events are silent status information that are recorded into the Event log. Example = "AC freq in range".
- Alarms are recorded into the Event log and displayed on the LCD status screen with the logo blinking. Some alarms may be announced by a beep every 3 seconds. Example = "Battery low".
- Faults are announced by a continuous beep and red LED, recorded into the Fault log and displayed on the LCD with a specific message box. Example = Out. short circuit.

Use the following troubleshooting chart to determine the UPS alarm condition.

8.1 Typical alarms and faults

To check the Event log or Fault log :

1. Press any button on the front panel display to activate the menu options.
2. Press the ↓ button to select Event log or Fault log.
3. Scroll through the listed events or faults.

The following table describes typical conditions.

Conditions	Possible cause	Action
Battery mode LED is On. 1 beep every 10 seconds.	A utility failure has occurred and the UPS is in Battery mode.	The UPS is powering the equipment with battery power. Prepare your equipment for shutdown.
Battery low LED is On. 1 beep every 3 seconds.	The UPS is in Battery mode and the battery is running low.	This warning is approximate, and the actual time to shutdown may vary significantly. Depending on the UPS load and number of Extended Battery Modules (EBMs), the "Battery Low" warning may occur before the batteries reach 20% capacity.
No battery LED is On. Beep continuous.	The batteries are disconnected.	Verify that all batteries are properly connected. If the condition persists, contact your service representative.
Battery fault LED is On. Beep continuous.	The battery test is failed due to bad or disconnected batteries, or the battery minimum voltage is reached in ABM cycling mode.	Verify that all batteries are properly connected. Start a new battery test : if the condition persists, contact your service representative.
The UPS does not provide the expected backup time.	The batteries need charging or service.	Apply utility power for 48 hours to charge the batteries. If the condition persists, contact your service representative.
Bypass mode LED is on.	An overload or a fault has occurred, or a command has been received and the UPS is in Bypass mode	Equipment is powered but not protected by the UPS. Check for one of the following alarms: overtemperature, overload or UPS failure.
Power overload LED is On. Beep continuous.	Power requirements exceed the UPS capacity (greater than 100% of nominal; see in table 6 on page 42 for specific output overload ranges).	Remove some of the equipment from the UPS. The UPS continues to operate, but may switch to Bypass mode or shut down if the load increases. The alarm resets when the condition becomes inactive.

8. Troubleshooting

UPS overtemperature LED is On. 1 beep every 3 seconds.	The UPS internal temperature is too high or a fan has failed. At the warning level, the UPS generates the alarm but remains in the current operating state. If the temperature rises another 10°C, the UPS transfers to Bypass mode or shuts down if Bypass is unusable.	If the UPS transferred to Bypass mode, the UPS will return to normal operation when the temperature drops 5°C below the warning level. If the condition persists, shut down the UPS. Clear vents and remove any heat sources. Allow the UPS to cool. Ensure the airflow around the UPS is not restricted. Restart the UPS. If the condition continues to persist, contact your service representative.
The UPS does not start.	The input source is not connected correctly.	Check the input connections.
	The Remote Power Off (RPO) switch is active or the RPO connector is missing.	If the UPS Status menu displays the "Remote Power Off" notice, inactivate the RPO input.
Input bad wiring / Output bad wiring Led is On. Beep continuous.	Input/Output cables are not connected to the correct terminal blocks.	Connect correctly the Input/Output cables.
MBP disconnected	The HotSwap MBP is no more connected to the UPS.	If the HotSwap MBP is connected to the UPS, check that the detection connector is correctly plugged.

8. Troubleshooting

8.2 Silencing the alarm

Press the ESC (Escape) button on the front panel display to silence the alarm. Check the alarm condition and perform the applicable action to resolve the condition. If the alarm status changes, the alarm beeps again, overriding the previous alarm silencing.

8.3 Service and support

If you have any questions or problems with the UPS, call your **Local Distributor** or your local service representative and ask for a UPS technical representative.

Please have the following information ready when you call for service:

- Model number
- Serial number
- Firmware version number
- Date of failure or problem
- Symptoms of failure or problem
- Customer return address and contact information

If repair is required, you will be given a Returned Material Authorization (RMA) number. This number must appear on the outside of the package and on the Bill Of Lading (if applicable). Use the original packaging or request packaging from the Help Desk or distributor. Units damaged in shipment as a result of improper packaging are not covered under warranty. A replacement or repair unit will be shipped, freight prepaid for all warrantied units.

For critical applications, immediate replacement may be available. Call the **Help Desk** for the dealer or distributor nearest you.

9.1 Model specifications

Table 1. Power Module model list

Model	Power ratings
9PX3K3U	3000VA / 3000W

Table 2. Extended Battery Module model list

Model	Configuration	Battery voltage	For power ratings
9PXEBM180RT	Rack / Tower	180Vdc	3000VA

Table 3. Weights and dimensions

Model (UPS)	Dimensions D x W x H (mm / in)	Weight (lb / kg)
9PX3K3U	722 x 440 x 130 (28.4 x 17.3 x 5.1)	106 / 48
Model (EBM)	**Dimensions D x W x H (mm / in)**	**Weight (lb / kg)**
9PXEBM180RT	645 x 440 x 130 (25.4 x 17.3 x 5.1)	150 / 68

Table 4. Electrical input

Nominal frequency	50/60Hz auto-sensing
Frequency range	50Hz : 40-60Hz before transfer to battery 60Hz : 50-70Hz before transfer to battery
Bypass voltage range	-20% / +15% of nominal value (default)
Noise filtering	MOV for normal and common mode noise

Model	Default input (Voltage/Current)	Selectable input Voltage range	Voltages at 100% load
9PX3K3U	208V / 16A	200V, 208V, 220V, 230V, 240V	176-276V

Table 5. Electrical input connections

Model	Input connection
9PX3K3U	L6-30P cord or Hardwired

9. Specifications

Table 6. Electrical output

All models	Normal mode	Battery mode
Voltage regulation	±1%	±1%
Efficiency	> 98% (High Efficiency mode) > 93%	> 91%
Frequency regulation	Sync with line ±5% of nominal line frequency (outside this range: ±0.5% of auto-selected nominal frequency)	±0.5% of auto-selected nominal frequency
Nominal output	200/208/220/230/240V (voltage configurable) 3000VA 3000W	
Frequency	50 or 60Hz, autosensing or configurable as a frequency converter	
Output overload	100-102% : no alarm 102-110% : load transfers to Bypass mode after 2 minutes 110-125% : load transfers to Bypass mode after 1 minute 125-150% : load transfers to Bypass mode after 10s > 150% : load transfers to Bypass mode after 500ms	
Output overload (Bypass mode)	100-125% : no alarm 125-150% : UPS shuts down after 1 minute > 150% : UPS shuts down after 1s	
Voltage waveform	Sinewave	
Harmonic distortion	< 2% THDV on linear load < 5% THDV on non-linear load	
Transfer time	Online mode: 0 ms (no break) High Efficiency mode: 10ms maximum (due to loss of utility)	
Power factor	1	
Load crest ratio	3 to 1	

Table 7. Electrical output connections

Model	Output connection
9PX3K3U	Hardwired (2) L6-30R (2) L6-20R

Table 8. Environmental and safety

EMC certifications	IEC/EN 62040-1: 2008 IEC/EN 62040-2: 2006 Cat. C2 IEC/EN 62040-3: 2011 IEC 60950-1 UL 1778 4th CSA 22.2
EMC (Emissions)*	CISPR22 Class A AS/NZS 22 Class A IEC 61000-3-2 (-3-12) IEC 61000-3-3 (-3-11) FCC part 15 Class A
EMC (Immunity)	IEC 61000-2-2 IEC 61000-4-2, Level 3 IEC 61000-4-3, Level 3 IEC 61000-4-4, Level 4 (also on signal ports) IEC 61000-4-5, Level 4, Criteria B IEC 61000-4-6, Level 3 IEC 61000-4-8, Level 4 IEC 61000-4-11

* for output cable < 10m.

9. Specifications

Agency markings	CE / cULus / energy star
Operating temperature	0 to 40°C (32 to 104°F) in Online mode, with linear derating for altitude **Note:** thermal protection switches load to Bypass in case of overheating.
Storage temperature	0 to 40°C (32 to 104°F) with batteries -15 to 60°C (5 to 140°F) without batteries
Transit temperature	-25 to 55°C (-13 to 130°F)
Relative humidity	0 to 95% no condensing
Operating altitude	Up to 3,000 meters (9,843 ft) above sea level with 10% derating per 1000m
Transit altitude	Up to 10,000 meters (32,808 ft) above sea level
Audible noise	< 45 dBA at 1 meter typical

Table 9. Battery

	Internal batteries	**EBM**
Rack / Tower configuration	9PX3K3U: 180Vdc	9PXEBM180RT: 180Vdc
Type	Sealed, maintenance-free, valve-regulated, lead-acid, with minimum 3-year float service life at 25°C (77°F). Lifetime is reduced above 30°C.	
Monitoring	Advanced monitoring for earlier failure detection and warning	
Battery port	External three-pole SBS75G Black connector on UPS for connection to EBM	
EBM battery cable length	40cm (15.7in)	

Table 10. Communication options

Communication bay	(1) available independent communication bay for connectivity cards
Compatible connectivity cards	Network-MS Modbus-MS Relay-MS
Communication ports	RS-232 (DB9): 1200-19200 bps USB: 19200 bps
Relay output contacts	(4) relay outputs (normally open or normally closed)
Remote On/Off	2 pins jumper (normally open)
Remote Power Off	3 pins jumper (normally open or normally closed)

EATON
Customer Care Center

Technical Support and Product Services

Technical questions? If you encounter a problem while following the instructions in this manual, or have questions about the operation, repair, or servicing of your equipment, please visit our web site www.eaton.com for complete service information.

To insure that your questions are correctly answered, please obtain the part number, assembly number, and serial number of the unit and include them in any discussions or correspondence.

Part Number: _____

Assembly Number: _____

Serial number: _____

Who To Contact

For Technical Support, Customer Care Center, Customer FAQ please visit our website: www.eaton.com

Scheduling Field Service Engineer Support

Scheduling of the EATON Field Service Engineers typically should be done 7 to 10 days before they are required on-site. If the startup of the UPS is critical to maintaining your schedule, please contact EATON, to insure a safe installation and start-up that will maintain the EATON warranty and insure smooth performance.

Return Policy for Single Phase Products (RMA)

Should you require factory service for your equipment, contact EATON Customer Care Center and obtain a Return Materials Authorization (RMA) prior to shipping your unit. Never ship equipment to EATON without first obtaining an RMA number.

For further details please visit our website: www.eaton.com

Date: _____

RMA Number: _____

Contact Name: _____

10. Glossary

Bypass AC source	Source supplying the bypass line. The equipment can be transferred to the bypass line if an overload occurs on the UPS output, for maintenance or in the event of a malfunction.
Frequency converter	Operating mode used to convert the AC-power frequency between the UPS input and output (50Hz -> 60Hz or 60Hz -> 50Hz).
Low-battery warning	This is a battery-voltage level indicating that battery power is low and that the user must take action to prevent the imminent break in the supply of power to the load.
Backup time	Time during which the load can be supplied by the UPS operating on battery power.
Load	Devices or equipment connected to the UPS output.
HE mode	Operating mode by which the load is supplied directly by the AC source if it is within the tolerances defined by the user. This mode reduces the consumption of electrical power
Manual bypass	Rotary switch controlled by the user, used to connect the loads directly to the AC source. Transfer of the load to the manual bypass enables UPS maintenance without interrupting the supply of power to the connected loads.
Normal (double conversion) mode	The normal UPS operating mode in which the AC source supplies the UPS which in turn supplies the connected loads (after electronic double conversion).
Normal AC source	Normal source of power for the UPS.
Relay contacts	Contacts supplying information to the user in the form of signals.
UPS	Uninterruptible Power Supply.