Operating instructions

Refrigerator for integrated use, door-on-door

EN

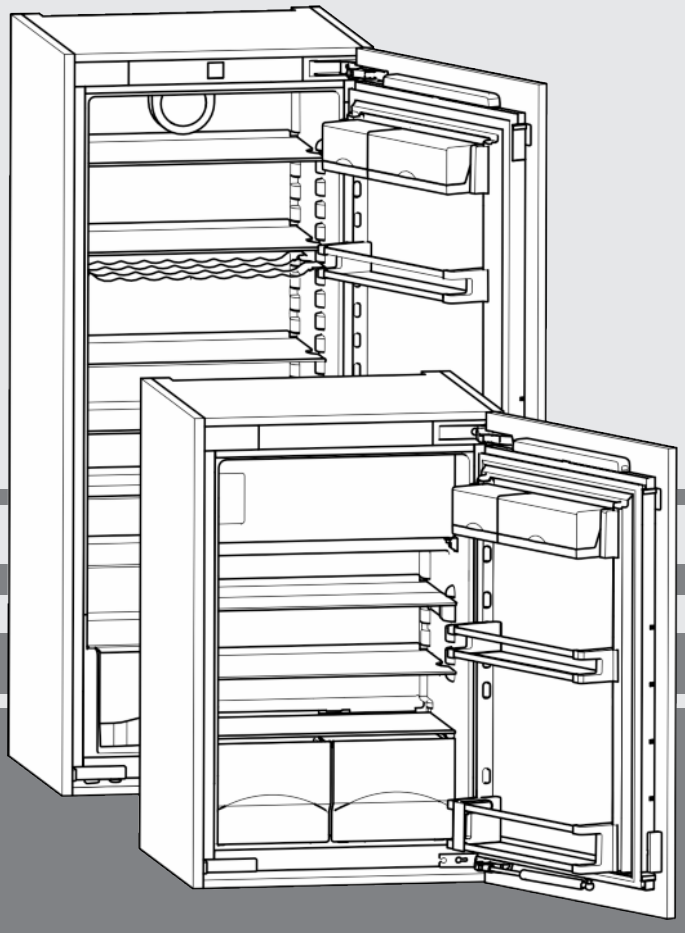

310815 **7085404 - 01**

IK/ IKP ... LP

LIEBHERR

Contents

1	**Appliance at a glance**	**2**
1.1	Description of appliance and equipment	2
1.2	Range of appliance use	2
1.3	Conformity	3
1.4	Saving energy	3
2	**General safety information**	**3**
3	**Controls and displays**	**4**
3.1	Operating and control elements	4
3.2	Temperature display	4
4	**Putting into operation**	**4**
4.1	Switching on the appliance	4
5	**Control**	**5**
5.1	Child proofing	5
5.2	Door alarm	5
5.3	Refrigerator compartment	5
5.4	Freezer compartment	7
6	**Maintenance**	**7**
6.1	Defrosting	7
6.2	Cleaning the appliance	8
6.3	Customer service	8
7	**Malfunctions**	**8**
8	**Decommissioning**	**9**
8.1	Switching off the appliance	9
8.2	Taking the appliance out of service	9
9	**Disposing of the appliance**	**9**

The manufacturer works constantly on the further development of all the types and models. Therefore please understand that we have to reserve the right to make design, equipment and technical modifications.

To get to know all the benefits of your new appliance, please read the information contained in these instructions carefully.

The instructions apply to several models. Differences may occur. Text relating only to specific appliances is marked with an asterisk (*).

Instructions for action are marked with a ▶, the results of action are marked with a ▷.

1 Appliance at a glance

1.1 Description of appliance and equipment

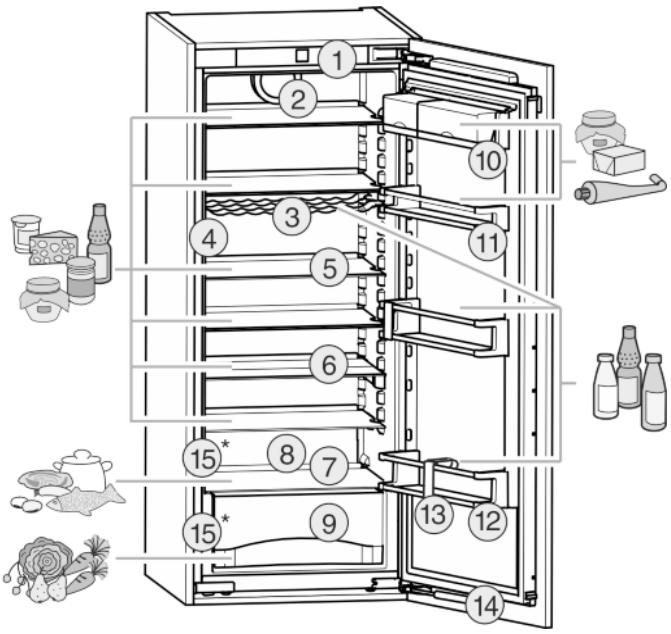

Fig. 1

(1) Operating and control elements
(2) Fan*
(3) Bottle shelf*
(4) LED light column
(5) Shelf
(6) Shelf, sectioned
(7) Coldest zone
(8) Drain hole
(9) Vegetable bin*
(10) Package rack
(11) Can rack
(12) Bottle rack
(13) Bottle holder
(14) Soft stop mechanism
(15) Type plate

Note

▶ Place food inside the appliance as shown in the diagram. This allows the appliance to save energy during operation.

▶ Shelves, drawers and baskets are arranged for optimum energy efficiency on delivery.

1.2 Range of appliance use

Intended use

The appliance is only suitable for refrigerating food in a domestic or domestic-like environment. This includes, for example, using

- in staff kitchenettes, bed and breakfast establishments,
- by guests in country cottages, hotels, motels and other accommodation,
- for catering and similar services in the wholesale trade.

All other types of use are not permitted.

Foreseeable misuse

The following applications are expressly prohibited:

- Storage and cooling of medicines, blood plasma, laboratory compounds or similar

materials and products subject to the Medical Devices Directive 2007/47/EC
- Use in potentially explosive areas

Improper use of the appliance can lead to damage to or spoilage of the stored goods.

Climate rating definitions

The appliance is set to operate within specific ambient temperature limits according to its climate rating. The correct climate rating for your appliance is indicated on the type plate.

Note

▶ Keep to the specified ambient temperatures in order to guarantee that the appliance works properly.

Climate rating	for ambient temperatures of
SN	10 °C to 32 °C
N	16 °C to 32 °C
ST	16 °C to 38 °C
T	16 °C to 43 °C

1.3 Conformity

The refrigerant circuit is tested for leakage. When built-in the appliance complies with the relevant safety regulations and EC Directives 2006/95/EC, 2004/108/EC, 2009/125/EC and 2010/30/EU.

Note for test institutions:

Tests are to be carried out according to the applicable standards and guidelines.
Preparation and testing of the appliances must be carried out taking the **manufacturer's loading plans** and the **notes in the operating manual** into account.

1.4 Saving energy

- Always ensure good ventilation. Do not cover ventilation openings or grille.
- Do not place appliance in areas of direct sunlight or next to a stove, heater or similar object.
- The energy consumption depends on the installation conditions, e.g. the ambient temperature (see 1.2) .
- Keep the time the appliance is open to a minimum.
- The lower the temperature setting, the higher the power consumption.
- Store food logically. (see Appliance at a glance).
- Ensure that all food is well packed and covered for storage. This will prevent frost from forming.
- Remove food as needed in order that it does not warm too much.
- First cool warm food to room temperature before storing it .
- Defrost frozen food in the refrigerator.*
- If there is a thick layer of frost in the appliance: defrost the appliance.*

2 General safety information

Danger for the user:

- This appliance can be used by children of 8 years old and over, and also by persons with restricted physical, sensory or mental capacity or lack of experience and knowledge, if they are supervised or have been instructed on safe use of the appliance and understand the resulting risks. Children must not be allowed to play with the appliance. Cleaning and user maintenance must not be carried out by children without supervision.
- When disconnecting the appliance from the supply, always take hold of the plug. Do not pull the cable.
- In the event of a fault pull out the mains plug or deactivate the fuse.
- Do not damage the mains power cable. Do not operate the appliance with a defective mains power cable.
- Have any repairs to or intervention in the appliance, and any change of the mains power cable, carried out by the customer service only or by other specialised personnel trained for the purpose.
- Only install, connect and dispose of the appliance according to the instructions.
- Only use the appliance when it is installed.
- Please keep these instructions in a safe place and pass them on to any subsequent owners.
- Special-purpose lamps (incandescent lamps, LEDs, fluorescent tubes) in the appliance serve to illuminate the appliance interior and are not suited for room illumination.

Fire hazard:

- The refrigerant R 600a is environmentally friendly but flammable. Escaping refrigerant may ignite.
  - Do not damage the refrigerant circuit pipes.
  - Do not allow naked flames or ignition sources to enter the appliance.
  - Do not use any electrical appliances in the interior (e.g. steam cleaners, heaters, ice cream maker etc.).
  - If refrigerant escapes: remove any naked flames or sources of ignition from the leakage area. Ventilate the room well. Notify the after-sales service.
- Do not store explosives or sprays using combustible propellants such as butane, propane, pentane, etc. in the appliance. To identify these spray cans, look for the list of contents printed on the can, or a flame symbol. Gases possibly escaping may ignite due to electrical components.
- Please be sure to store alcoholic drinks or other packaging containing alcohol in tightly closed containers. Any alcohol that leaks out may be ignited by electrical components.

Danger of tipping and falling:

- Do not misuse the plinth, drawers, doors etc. as a step or for support. This applies particularly to children.

Danger of food poisoning:

- Do not consume food which has been stored too long.

Danger of frostbite, numbness and pain:

- Avoid lasting skin contact with cold surfaces or refrigerated/frozen food or take protective steps, e.g. wear gloves. Do not consume ice cream, water ice or ice cubes immediately and do not consume them too cold.

Danger of injury and damage:

- Hot steam can lead to injury. Do not use electrical heating or steam cleaning equipment, open flames or defrosting sprays to defrost.
- Do not use sharp implements to remove the ice.

Danger of crushing:

- Do not hold the hinge when opening and closing the door. Fingers may get caught.

Symbols on the appliance:

	The symbol can be located on the compressor. It refers to the oil in the compressor and indicates the following danger: Swallowing or inhaling can be fatal. This is only relevant for recycling. There is no danger in normal operation.

Please observe the specific information in the other sections:

	DANGER	identifies a situation involving direct danger which, if not obviated, may result in death or severe bodily injury.
	WARNING	identifies a dangerous situation which, if not obviated, may result in death or severe bodily injury.
	CAUTION	identifies a dangerous situation which, if not obviated, may result in minor or medium bodily injury.
	NOTICE	identifies a dangerous situation which, if not obviated, may result in damage to property.

	Note	identifies useful information and tips.

3 Controls and displays

3.1 Operating and control elements

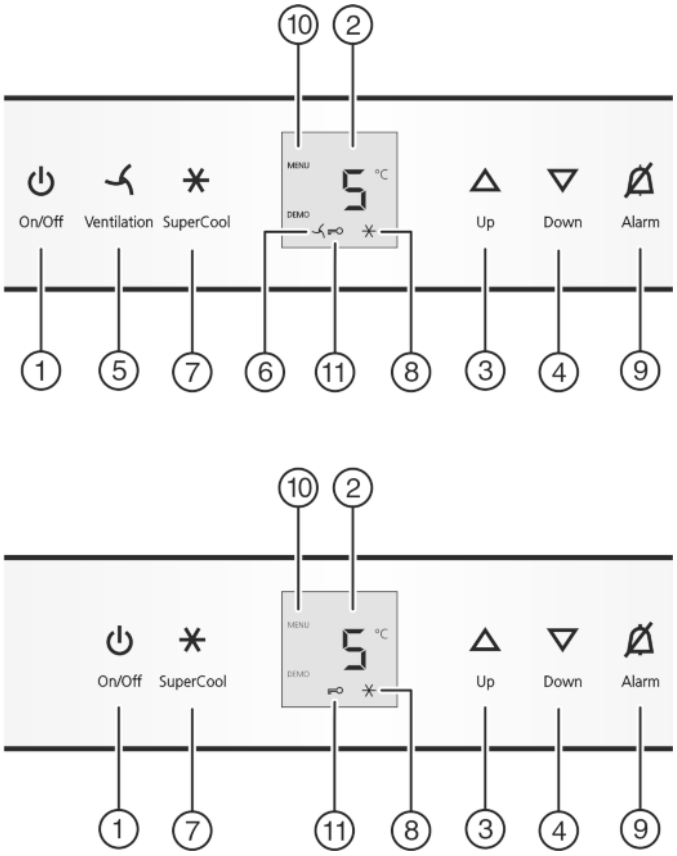

Fig. 2

(1) On/Off button
(2) Temperature display
(3) Up setting button
(4) Down setting button
(5) Ventilation button*
(6) Ventilation symbol*
(7) SuperCool button
(8) SuperCool symbol
(9) Alarm button
(10) Menu symbol
(11) Child lock symbol

3.2 Temperature display

The following are displayed in normal operation:

- the average cooling temperature

The following displays indicate malfunction. Possible causes and corrective action (see Malfunction).

- F0 to F9

4 Putting into operation

4.1 Switching on the appliance

Switch on the appliance approx. 2 hours before adding frozen food for the first time.



▶ Open the door.
▶ Press On/Off button *Fig. 2 (1)*.
▷ The temperature display indicates the current temperature.
▷ The interior light is on when the door is open.

*** Depending on model and options**

5 Control

5.1 Child proofing

The child-proofing function enables you to make sure that the appliance is not inadvertently switched off by playing children.

5.1.1 Setting the child lock function

▶ To activate the setting mode: press SuperCool button *Fig. 2 (7)* for about 5 s.
▷ The display indicates **c**.
▷ The menu symbol *Fig. 2 (10)* shines.
▶ Briefly press theSuperCool button *Fig. 2 (7)* to confirm.

When **c1** is indicated in the display:

▶ to activate the child lock, briefly press the SuperCool button *Fig. 2 (7)*.



▷ The child lock symbol *Fig. 2 (11)* shines. **c** flashes in the display.

When **c0** is indicated in the display:

▶ to deactivate the child lock, briefly press the SuperCool button *Fig. 2 (7)*.
▷ The child lock symbol *Fig. 2 (11)* goes out. **c** flashes in the display.
▶ To deactivate the set-up mode: press On/Off button *Fig. 2 (1)*.

-or-

▶ Wait for 5 minutes.

▷ The temperature is indicated again in the temperature display.

5.2 Door alarm

An audible warning sounds if the door is open for longer than 60 seconds.

The audible warning stops automatically when the door is closed.

5.2.1 Muting the door alarm

The audible alarm can be muted when the door is open. The sound switch-off function is active as long as the door is left open.

▶ Press alarm button *Fig. 2 (9)*.
▷ The door alarm is silenced.

5.3 Refrigerator compartment

The natural circulation of air in the refrigerator compartment results in zones differing in temperature. It is coldest directly above the vegetable drawers and at the rear wall. It is warmest at the top front of the compartment and in the door.

5.3.1 Food refrigeration

Note
The energy consumption increases and the cooling performance decreases if the ventilation is inadequate.
▶ Always keep the air slits of the fan free.

▶ Store perishable food such as ready-to-serve dishes, meat products and sausages in the coldest zone. Place butter and preserves in the upper area and in the door (see Appliance at a glance).
▶ Use recyclable plastic, metal, aluminium and glass containers and cling film for wrapping.
▶ Always store liquids and food which is subject to odour or taste transfer in closed containers or cover them.
▶ Foods which give off a large amount of ethylene gas and delicate foods, such as fruit, vegetables, salad, should always be stored separately or wrapped so as not to reduce the storage life; e.g. do not store tomatoes together with kiwis or cabbage.
▶ Use the front area of the refrigerator compartment floor only for briefly putting down cooled products, e.g. when rearranging and sorting. However do not leave cooled products there otherwise they may be pushed back or tipped over when the door is closed.
▶ Do not store food too close together to enable good air circulation.

5.3.2 Setting the temperature

The temperature depends on the following factors:

- the frequency of opening the door
- the room temperature of the installation location
- the type, temperature and quantity of the food

The temperature can be set from 9 °C to 1 °C, the recommended temperature is 5 °C.

An average temperature of about –18 °C is reached in the freezer compartment.*

▶ For a higher temperature setting: press Up button *Fig. 2 (3)*.
▶ For a lower temperature setting: press Down button *Fig. 2 (4)*.
▷ When the button is pressed the first time, the previously set value is indicated, flashing, in the temperature display.
▶ To change the temperature in 1 °C steps: briefly press the button.
▶ To change the temperature continuously: hold down the button.
▷ The value is displayed flashing during the setting operation.
▷ The actual temperature is displayed about 5 s after the last press of a button. The temperature slowly adjusts to the new value.

5.3.3 SuperCool

With SuperCool you switch to the highest cooling performance to reach lower cooling temperatures. Use SuperCool, to rapidly cool large amounts of food.

When SuperCool is activated, the fan* may run. The appliance operates with maximum cooling performance, which means that the noise of the refrigeration unit may be temporarily louder.

The SuperCool function uses slightly more energy.

Cooling with SuperCool

▶ Briefly press SuperCool button *Fig. 2 (7)*.
▷ The SuperCool symbol *Fig. 2 (8)* lights up in the display.
▷ The cooling temperature drops to the coldest value. SuperCool is activated.
▷ SuperCool is automatically deactivated after 12 hours. The appliance continues to operate in the energy-saving, normal mode.

To prematurely deactivate SuperCool

▶ Briefly press SuperCool button *Fig. 2 (7)*.
▷ The SuperCool symbol *Fig. 2 (8)* goes out in the display.
▷ SuperCool is deactivated.

EN

5.3.4 Fan*

With the fan you can rapidly cool large quantities of fresh food or achieve a relatively even distribution of temperature across all the storage levels.



The forced-air cooling is to be recommended:

- at high room temperature (above33 °C)
- at high humidity

The forced-air cooling uses slightly more energy. To save energy, the fan switches off automatically when the door is open.

Switching on the fan*

▶ Briefly press the fan button *Fig. 2 (5)*.
▷ The fan symbol *Fig. 2 (6)* shines.
▷ The fan is active. In some appliances, the fan is only activated when the compressor is running.

To switch off the fan*

▶ Briefly press the fan button *Fig. 2 (5)*.
▷ The fan symbol *Fig. 2 (6)* goes out.
▷ The fan is switched off.

5.3.5 Shelves

Moving or removing shelves

The shelves have stops preventing them from being unintentionally pulled out.

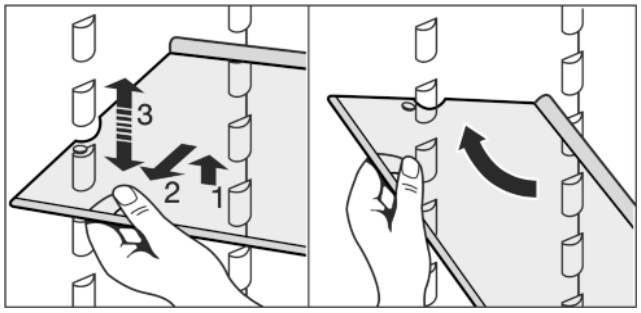

Fig. 3

▶ Lift the shelf slightly and pull forward a little.
▶ Adjust the height of the shelf. To do so, push the cut-outs along the supports.
▶ In order to remove the shelf fully, place it at a slant and pull out towards the front.
▶ Insert shelf with the raised edge pointing upwards at the back.
▷ The food does not freeze onto the rear wall.

Dismantling shelves

▶ The shelves can be dismantled for cleaning.

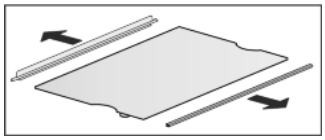

5.3.6 Using the sectioned shelf

▶ Slide the sectioned shelf under, as shown in the illustration.

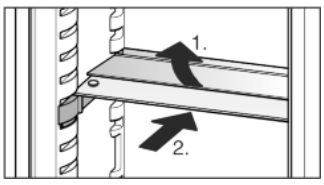

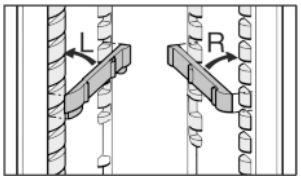

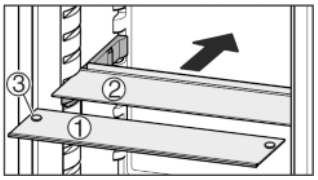

Fig. 4

▶ Attach the support rails, paying attention to the right (R) and left (L) part!
▶ The glass shelf with stop face (2) has to be at the back.
▶ The glass plate (1) with pull-out stops must be at the front so that the stops (3) face downwards.

5.3.7 Door racks

Moving the storage rack

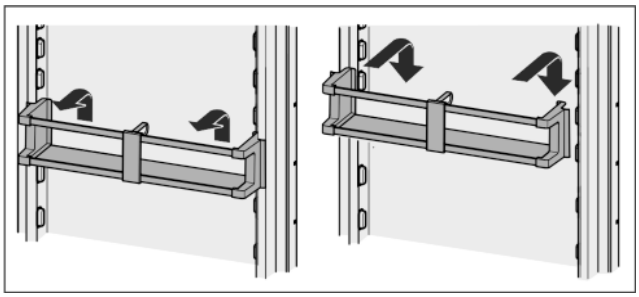

Fig. 5

The boxes can be removed and placed on the table as a single unit.

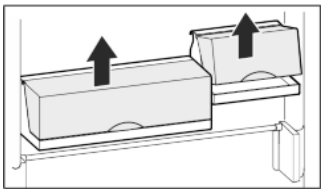

Either one or both the boxes can be used. If particularly tall bottles are to be stored, hang only a single box above the bottle rack.

▶ Re-positioning the boxes: Lift them for removal and reposition them as required.

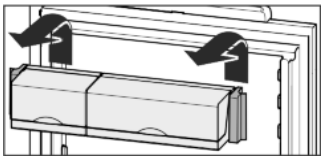

Dismantling door racks

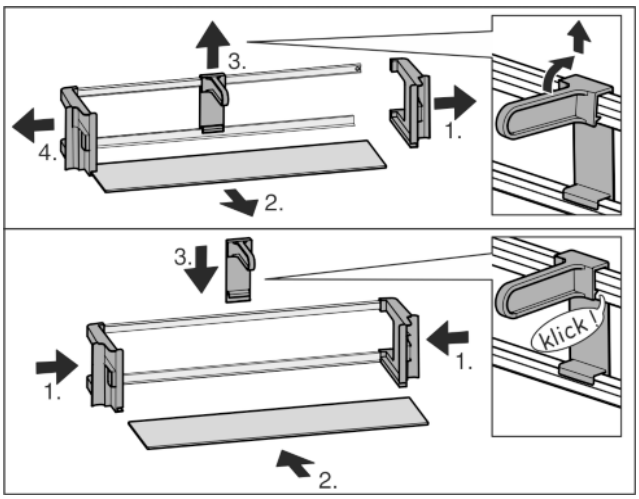

Fig. 6

*** Depending on model and options**

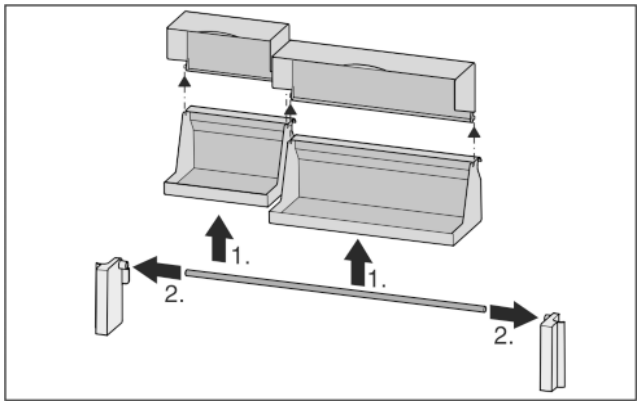

Fig. 7

▶ The door racks can be dismantled for cleaning.

5.3.8 Using the bottle holder

▶ To avoid the bottles tipping over, push the bottle holder along.

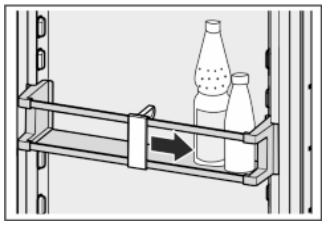

5.3.9 Vegetable bins*

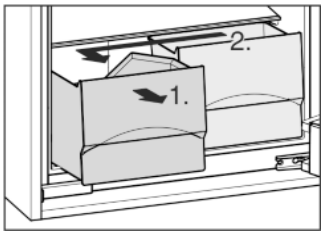

Fig. 8

5.3.10 Vegetable bins on telescopic rails*

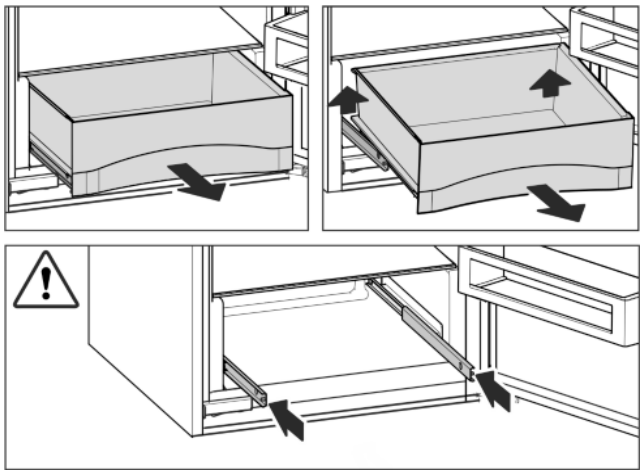

Fig. 9

5.4 Freezer compartment*

You can store frozen food for several months, make ice cubes and freeze fresh food in the freezer compartment at a temperature of -18 °C and lower.

The air temperature in the compartment, measured by thermometer or other instruments, may fluctuate.

5.4.1 Freezing food*

2 kg fresh food/24 h is the maximum weight which can be frozen.

CAUTION

Risk of injury due to broken glass!

Bottles and cans containing drinks may burst when being frozen. This applies particularly to sparkling drinks.

▶ Do not freeze bottles and cans containing drinks!

▶ 4 h before freezing food, set the temperature to 5 °C or colder.

In order that the food is rapidly frozen through to the core, do not exceed the following quantities per pack:

- Fruit, vegetables up to 1 kg
- Meat up to 2.5 kg

▶ Pack the food in portions in freezer bags, reusable plastic, metal or aluminium containers.

▶ Spread the food over the shelf. Do not allow it to contact and thaw items that are already frozen.

▶ Set the temperature back again 24 h after placing the food inside.

5.4.3 Thawing food*

- in the refrigerator compartment
- in a microwave oven
- in a conventional or fan oven
- at room temperature

▶ Remove only as much food as is required. Use thawed food as quickly as possible.

▶ Food once thawed should be re-frozen only in exceptional cases.

6 Maintenance

6.1 Defrosting

6.1.1 Defrosting refrigerator compartment

The refrigerator compartment is defrosted automatically. The water evaporates. Drops of water on the rear wall are functionally conditioned and perfectly normal.

▶ Clean the drain hole at regular intervals to allow the defrost water to drain (see 6.2) .

6.1.2 Defrosting freezer compartment*

A layer of frost and ice forms in the freezer compartment after the appliance has been in use for a lengthy period of time. This is quite normal. The layer of frost and ice forms more quickly if the door is opened frequently or if the food is warm when placed inside. However, a thick layer of ice will increase the appliance's energy consumption. You should therefore defrost the appliance regularly.

CAUTION

Risk of injury and damage as a result of hot steam!

▶ Do not use electric heaters or steam cleaners, naked flames or defrosting sprays for defrosting.

▶ Do not remove ice using sharp instruments.

▶ Switch off the appliance.

▷ The temperature display goes out.

▷ If the temperature display does not go out, the child-proofing function (see 5.1) is active.

▶ Pull out the plug.

- ▶ Wrap the frozen food in newspaper or blankets and store in a cool place.
- ▶ Leave the compartment and appliance door open during defrosting.
- ▶ Remove detached pieces of ice.
- ▶ Pay attention that the defrost water does not run into the kitchen unit.
- ▶ If necessary, pick up defrost water several times, using a sponge or cloth.
- ▶ Clean the compartment (see 6.2) .

6.2 Cleaning the appliance

WARNING
Risk of injury and damage as a result of hot steam!
Hot steam can lead to burns and can damage the surfaces.
- ▶ Do not use any steam cleaners!

NOTICE
Incorrect cleaning damages the appliance!
- ▶ Do not use cleaning agents in concentrated form.
- ▶ Do not use any scouring or abrasive sponges or steel wool.
- ▶ Do not use any sharp or abrasive cleaning agents, nor any that contain sand, chloride or acid.
- ▶ Do not use chemical solvents.
- ▶ Do not damage or remove the type plate on the inside of the appliance. It is important for the customer service.
- ▶ Do not pull off, bend or damage cables or other components.
- ▶ Do not allow any cleaning water to enter the drain channel, ventilation grille or electrical parts.
- ▶ Please use soft cleaning cloths and a universal pH-neutral cleaning agent.
- ▶ Please use cleaning and care products suitable for contact with foodstuffs in the appliance interior.

- ▶ **Empty appliance.**
- ▶ **Pull out the power plug.**



- ▶ Clean **plastic outer and inner surfaces** with lukewarm water and a little washing-up liquid.

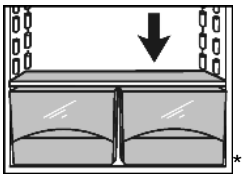

- ▶ Clean **drain hole**: Remove deposits with a narrow instrument, e.g. a cotton bud.

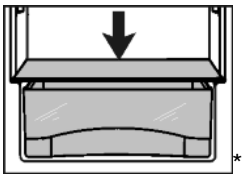

- ▶ Most of the **parts** can be dismantled for cleaning: see the relevant chapter.
- ▶ **Clean drawers** by hand with lukewarm water and a little washing up liquid.
- ▶ All the **other fittings** can be put in the dishwasher.
- ▶ Only use a damp cloth to clean the **telescopic rails**. The grease in the runners is for lubrication purposes and must not be removed.*

After cleaning:
- ▶ Wipe dry the appliance and items of equipment.
- ▶ Connect the appliance and switch it on again.
- ▶ Put the food back inside.
  When the temperature is sufficiently cold:
- ▶ Put the food back inside.

6.3 Customer service

First check whether you can correct the fault yourself by reference to the list (see Malfunction). If this is not the case, please contact the customer service whose address is given in the enclosed customer service list.

WARNING
Risk of injury if repair work is not carried out professionally!
- ▶ Have any repairs and action - not expressly specified - on the appliance and mains cable carried out by service personnel only. (see Maintenance)

- ▶ Read the appliance designation *Fig. 10 (1)*, service No. *Fig. 10 (2)* and serial No. *Fig. 10 (3)* off the type plate located inside the appliance on the left-hand side.

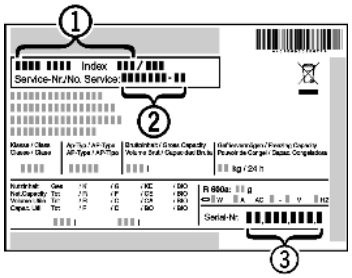

Fig. 10

- ▶ Notify the customer service, specifying the fault, appliance designation *Fig. 10 (1)*, service No. *Fig. 10 (2)* and serial No. *Fig. 10 (3)*.
- ▷ This will help us to provide you with a faster and more accurate service.
- ▶ Keep the appliance closed until the customer service arrives.
- ▷ The food will stay cool longer.
- ▶ Pull out the mains plug (not by pulling the connecting cable) or switch off the fuse.

7 Malfunctions

Your appliance is designed and manufactured for a long life span and reliable operation. If a malfunction nonetheless occurs during operation, check whether it is due to a handling error. In this case you will have to be charged for the costs incurred, even during the warranty period. You may be able to rectify the following faults yourself:

Appliance does not work.
- → The appliance is not switched on.
- ▶ Switch on the appliance.
- → The power plug is not properly inserted in the wall socket.
- ▶ Check power plug.
- → The fuse of the wall socket is not in order.
- ▶ Check fuse.

The compressor runs for a long time.
- → The compressor switches to a low speed when little cold is needed. Although the running time is increased as a result, energy is saved.
- ▶ This is normal in energy-saving models.
- → SuperCool is activated.
- ▶ The compressor runs for longer in order to rapidly cool the food. This is normal.

A LED on the bottom rear of the appliance (at the compressor) flashes repeatedly every 5 seconds*.
- → There is a fault.
- ▶ Please contact the after-sales service (see Maintenance).

Excessive noise.
- → Due to the various speed steps, speed-regulated* compressors can generate different running noises.
- ▶ The sound is normal.

A bubbling and gurgling noise.
→ This noise comes from the refrigerant flowing in the refrigeration circuit.
▶ The sound is normal.

A quiet clicking noise.
→ The noise is produced whenever the refrigeration unit (motor) automatically switches on or off.
▶ The sound is normal.

A hum. It is briefly a little louder when the refrigeration unit (the motor) switches on.
→ The refrigeration increases automatically when the SuperCool function is activated, fresh food has just been placed in the appliance or the door has been left open for a while.
▶ The sound is normal.
→ The ambient temperature is too high.
▶ Solution: (see 1.2)

A low hum.*
→ The sound is produced by air flow noise of the fan.
▶ The sound is normal.

Vibratory noise.
→ The appliance is not fixed to the ground. The running of the cooling unit therefore makes objects and adjacent furniture vibrate.
▶ Check installation and reposition appliance as required.
▶ Move bottles and containers apart.

Flow sound at the soft stop mechanism.
→ The noise is produced when the door is opened and closed.
▶ The sound is normal.

The temperature display indicates: F0 to F9
→ There is a fault.
▶ Please contact the after-sales service (see Maintenance).

DEMO shines in the temperature display.
→ The demo mode is activated.
▶ Please contact the after-sales service (see Maintenance).

The outer surfaces of the appliance are warm*.
→ The heat of the refrigeration circuit is used to prevent condensate from forming.
▶ This is normal.

The temperature is not cold enough.
→ The door of the appliance is not properly closed.
▶ Close the door of the appliance.
→ Insufficient ventilation.
▶ Keep ventilation grille clear, and clean it.
→ The ambient temperature is too high.
▶ Solution: (see 1.2) .
→ The appliance was opened too frequently or for too long.
▶ Wait to see whether the appliance reaches the required temperature by itself. If not, please contact the after sales service (see Maintenance).
→ The temperature is incorrectly set.
▶ Set the temperature to a colder setting and check after 24 hours.
→ The appliance is too close to a source of heat (stove, heater etc).
▶ Change the position of the appliance or the source of heat.
→ The appliance was not inserted properly into the recess.
▶ Check whether the appliance was inserted correctly and the door closes properly.

The internal light does not come on.
→ The appliance is not switched on.
▶ Switch on the appliance.
→ The door was open longer than 15 min.
▶ The interior light automatically switches off if the door has been open for about 15 min.
→ The LED illumination is defective or the cover is damaged:

WARNING
Risk of injury due to electric shock!
Live parts are located under the cover.
▶ Have the LED interior light changed or repaired only by the customer service or by specialized personnel trained for the purpose.

WARNING
Danger of injury by LED lamp!
The light intensity of the LED illumination corresponds to laser class 1/1M.
If the cover is defective:
▶ Do not look into the illumination with optical lenses from the immediate proximity. This can cause injury to the eyes.

8 Decommissioning

8.1 Switching off the appliance



▶ Press On/Off button *Fig. 2 (1)* for approx. 2 seconds.
▷ A long beep is emitted. The temperature display is dark. The appliance is switched off.
▷ If the appliance cannot be switched off, the child lock function is active (see 5.1) .

8.2 Taking the appliance out of service



▶ Empty the appliance.
▶ Switch off the appliance (see Decommissioning).
▶ Remove mains connector.
▶ Clean the appliance (see 6.2) .
▶ Leave the door open to prevent odour.

9 Disposing of the appliance



The appliance contains some reusable materials and should be disposed of properly - not simply with unsorted household refuse. Appliances which are no longer needed must be disposed of in a professional and appropriate way, in accordance with the current local regulations and laws.

When disposing of the appliance, ensure that the refrigeration circuit is not damaged to prevent uncontrolled escape of the refrigerant it contains (data on type plate) and oil.
▶ Disable the appliance.
▶ Pull out the plug.
▶ Cut through the connecting cable.

Liebherr Hausgeräte Ochsenhausen GmbH * Memminger Strasse 77-79 * 88416 Ochsenhausen * Deutschland * www.liebherr.com