Operating instructions

Integrated fridge/freezer

EN

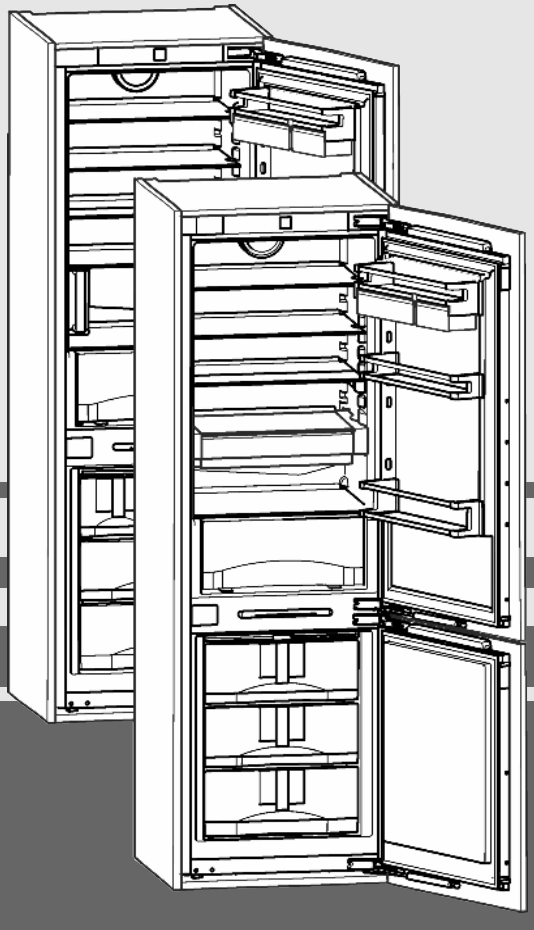

20200128 **7086530 - 00**

ICN/ SICN/ ICNP

LIEBHERR

Contents

1	**Appliance at a glance**	**2**
1.1	Description of appliance and equipment	2
1.2	Appliance range of use	2
1.3	Conformity	3
1.4	Product data	3
1.5	Saving energy	3
2	**General safety information**	**3**
3	**Controls and displays**	**4**
3.1	Operating and control elements	4
3.2	Temperature display	5
4	**Putting into operation**	**5**
4.1	Switching on the appliance	5
5	**Control**	**5**
5.1	Child proofing	5
5.2	Door alarm	5
5.3	Temperature alarm	5
5.4	Refrigerator compartment	6
5.5	Freezer compartment	9
6	**Maintenance**	**12**
6.1	Defrosting with NoFrost	12
6.2	Cleaning the appliance	12
6.3	Cleaning the IceMaker*	12
6.4	Customer service	13
7	**Malfunctions**	**13**
8	**Decommissioning**	**14**
8.1	Switching off the appliance	14
8.2	Taking the appliance out of service	15
9	**Disposing of the appliance**	**15**

The manufacturer works constantly on the further development of all the types and models. Therefore please understand that we have to reserve the right to make design, equipment and technical modifications.

To get to know all the benefits of your new appliance, please read the information contained in these instructions carefully.

The instructions apply to several models. Differences may occur. Text relating only to specific appliances is marked with an asterisk (*).

Instructions for action are marked with a ▶, the results of action are marked with a ▷.

1 Appliance at a glance

1.1 Description of appliance and equipment

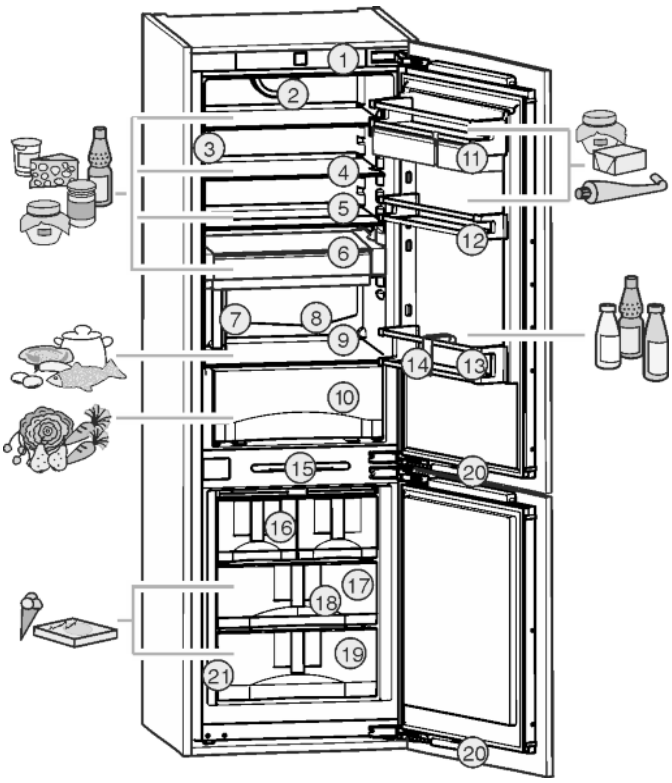

Fig. 1

(1) Operating and control elements
(2) Fan
(3) LED light column
(4) Shelf
(5) Shelf, sectioned
(6) VarioSafe
(7) Water tank*
(8) Drain hole
(9) Coldest zone
(10) BioCool
(11) VarioBox
(12) Can rack
(13) Bottle rack
(14) Bottle holder
(15) LED lighting, freezer compartment
(16) IceMaker*
(17) Freezer pack
(18) Information system
(19) Freezer compartment drawer
(20) Soft stop mechanism
(21) Type plate

Note

▶ Place food inside the appliance as shown in the diagram. This allows the appliance to save energy during operation.

▶ Shelves, drawers and baskets are arranged for optimum energy efficiency on delivery.

1.2 Appliance range of use

Intended use

The appliance is only suitable for cooling food products in a domestic or household-like environment. This includes, for example, use:

- in staff kitchens, bed and breakfast establishments,
- by guests in country houses, hotels, motels and other accommodation,

- for catering and similar services in the wholesale trade.

All other types of use are not permitted.

Foreseeable misuse

The following applications are expressly forbidden:

- Storing and refrigerating medicines, blood plasma, laboratory preparations or similar substances and products based on the Medical Device Directive 2007/47/EC
- Use in areas at risk of explosions

Misusing the appliance may lead to damage to the goods stored or they may spoil.

Climate classifications

Depending on the climate classification the appliance is designed to operate in restricted ambient temperatures. The climate classification applying to your appliance is printed on the rating plate.

Note

▶ Keep to the specified ambient temperatures in order to guarantee that the appliance works properly.

Climate classification	for ambient temperatures of
SN	10 °C to 32 °C
N	16 °C to 32 °C
ST	16 °C to 38 °C
T	16 °C to 43 °C

1.3 Conformity

The refrigerant circuit has been tested for leaks. In installed condition, this appliance complies with the applicable safety stipulations and with directives 2014/35/EU, 2014/30/EU, 2009/125/EG, 2011/65/EU and 2010/30/EU.

1.4 Product data

Product data is included with the appliance, as per Directive (EU) 2017/1369. The complete product data sheet is available on the Liebherr website under Downloads.

1.5 Saving energy

- Pay attention to good ventilation. Do not cover ventilation holes or grids.
- Always keep the fan air slits clear.
- Do not install the appliance in direct sunlight, next to an oven, radiator or similar.
- Energy consumption is dependent on the installation conditions, e.g. ambient temperature (see 1.2 Appliance range of use) . If the ambient temperature deviates from the standard temperature of 25°C, the energy consumption may differ.
- Open the appliance for as short a time as possible.
- The lower the temperature is set the higher the energy consumption.
- Arrange the food in an organised way (see 1 Appliance at a glance) .
- Keep all food properly packed and covered. This prevents frost from forming.
- Only take food out for as long as necessary so that it doesn't warm up too much.
- Inserting warm food: allow to cool down to room temperature first.
- Thaw frozen food in the refrigerator.
- If you intend to be on holiday for a long time empty the refrigerator and switch it off.

2 General safety information

Danger for the user:

- This device can be used by children and people with impaired physical, sensory or mental abilities or with a lack of experience and knowledge provided that they are supervised or have received instruction in the safe use of this device, and about the resulting hazards. Children must not play with this appliance. Cleaning and user maintenance work must not be carried out by children without adult supervision. Children aged between 3 and 8 are allowed to load and unload the appliance. Children below the age of 3 must be kept away from the appliance unless they are under continuous adult supervision.
- When disconnecting the appliance from the supply, always take hold of the plug. Do not pull the cable.
- In the event of a fault pull out the mains plug or deactivate the fuse.
- Do not damage the mains power cable. Do not operate the appliance with a defective mains power cable.
- Repairs, interventions on the appliance and the replacement of mains connection line may only be carried out by After-Sales Service or other suitably trained specialist personnel.
- Only install, connect and dispose of the appliance according to the instructions.
- Only use the appliance when it is installed.
- Please keep these instructions in a safe place and pass them on to any subsequent owners.
- All repairs to and intervention in the IceMaker may be carried out only by service personnel or by other skilled personnel trained for the purpose.*
- Special lights, such as LED lights on the appliance, are used to illuminate the interior of the appliance and are not suitable for room lighting.

Fire hazard:

- The coolant used (information on the model plate) is eco-friendly but also flammable. Any leaking coolant may ignite.
  - Do not damage the refrigerant circuit pipes.

EN

- Do not use an open flame or other source of ignition inside the appliance.
- Do not use electrical appliances inside the appliance (e.g. steam cleaners, heaters, ice cream makers, etc.).
- If the refrigerant leaks: remove any naked flames or ignition sources from the vicinity of the leakage point. Properly air the room. Inform customer services.

- Do not store explosives or sprays using combustible propellants such as butane, propane, pentane, etc. in the appliance. To identify these spray cans, look for the list of contents printed on the can, or a flame symbol. Gases possibly escaping may ignite due to electrical components.
- Please be sure to store alcoholic drinks or other packaging containing alcohol in tightly closed containers. Any alcohol that leaks out may be ignited by electrical components.

Danger of tipping and falling:

- Do not misuse the plinth, drawers, doors etc. as a step or for support. This applies particularly to children.

Danger of food poisoning:

- Do not consume food which has been stored too long.

Danger of frostbite, numbness and pain:

- Avoid lasting skin contact with cold surfaces or refrigerated/frozen food or take protective steps, e.g. wear gloves. Do not consume ice cream, water ice or ice cubes immediately and do not consume them too cold.

Danger of injury and damage:

- Hot steam can lead to injury. Do not use electrical heating or steam cleaning equipment, open flames or defrosting sprays to defrost.
- Do not use sharp implements to remove the ice.

Danger of crushing:

- Do not hold the hinge when opening and closing the door. Fingers may get caught.

Symbols on the appliance:

	The symbol can be located on the compressor. It refers to the oil in the compressor and indicates the following danger: Swallowing or inhaling can be fatal. This is only relevant for recycling. There is no danger in normal operation.
	This symbol is found on the compressor and indicates the danger of flammable materials.
	A sticker to this effect may be applied to the rear of the appliance. It refers to the foam-padded panels in the door and/or the housing. This is only relevant for recycling. Do not remove the sticker.

Please observe the specific information in the other sections:

⚠	DANGER	identifies a situation involving direct danger which, if not obviated, may result in death or severe bodily injury.
⚠	WARNING	identifies a dangerous situation which, if not obviated, may result in death or severe bodily injury.
⚠	CAUTION	identifies a dangerous situation which, if not obviated, may result in minor or medium bodily injury.
	NOTICE	identifies a dangerous situation which, if not obviated, may result in damage to property.

	Note	identifies useful information and tips.

3 Controls and displays

3.1 Operating and control elements

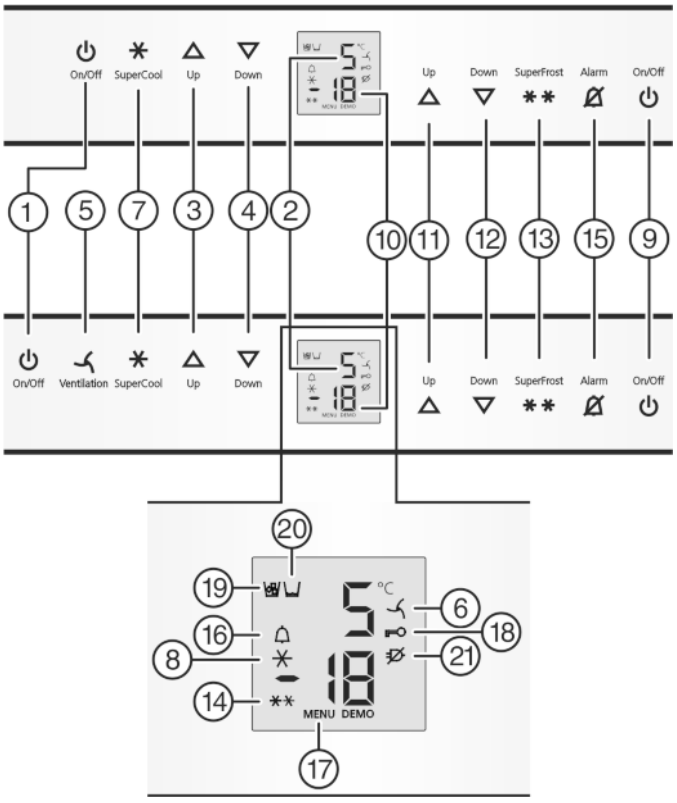

Fig. 2

(1) Refrigerator compartment On/Off button
(2) Refrigerator compartment temperature display
(3) Refrigerator compartment Up setting button
(12) Freezer compartment Down setting button
(13) SuperFrost button
(14) SuperFrost symbol

(4) Refrigerator compartment Down setting button
(5) Ventilation button*
(6) Ventilation symbol*
(7) SuperCool button
(8) SuperCool symbol
(9) Refrigerator compartment On/Off button
(10) Freezer compartment temperature display
(11) Freezer compartment Up setting button
(15) Alarm button
(16) Alarm symbol
(17) Menu symbol
(18) Child lock symbol
(19) IceMaker symbol*
(20) Water tank symbol*
(21) Power failure symbol

3.2 Temperature display

During normal operation, the display shows:

- the highest freezing temperature
- the average cooling temperature

The freezer temperature display flashes if/when:

- You change the temperature setting
- The appliance is not cold enough after switching on
- The temperature rises by several degrees

Stripes flash in the display if/when:

- The freezer temperature exceeds 0 °C.

The following displays indicate a fault. Possible causes and solutions: (see 7 Malfunctions) .

- F0 to F9
- FE*
- The power failure symbol flashes.

4 Putting into operation

4.1 Switching on the appliance

Note
The manufacturer recommends:
▶ Store frozen produce at -18 °C or colder.

Switch on the appliance approx. 2 hours before loading for the first time.

4.1.1 Switching on the entire appliance at the freezer compartment

▶ Open the door.
▶ Press On/Off button, freezer compartment *Fig. 2 (9)*.
▷ The temperature display of the refrigerator compartment indicates the current temperature inside.
▷ The temperature display of the freezer compartment and the alarm symbol flash until the temperature is sufficiently low. If the temperature is above 0 °C, dashes flash. If it is below, the current temperature flashes.
▷ If “DEMO” is displayed, demo mode is activated. Please contact the after sales service.

4.1.2 Switching on the refrigerator compartment

Note
Before going on holiday, or other prolonged periods of non-use
▶ You can switch the fridge section on/off separately from the freezer section.

▶ Open the door.
▶ Press On/Off button, refrigerator compartment *Fig. 2 (1)*.
▷ The fridge section is on: Fridge temperature display *Fig. 2 (2)* is on. When you open the door the interior light comes on.

5 Control

5.1 Child proofing

The child-proofing function enables you to make sure that the appliance is not inadvertently switched off by playing children.

5.1.1 Setting the child lock function

▶ To activate the setting mode: press SuperFrost button *Fig. 2 (13)* for about 5 s.
▷ c flashes on the display.
▷ The menu symbol *Fig. 2 (17)* shines.
▶ Briefly press the SuperFrost button *Fig. 2 (13)*.to confirm.
When cl is indicated in the display:
▶ Tto activate the child lock, briefly press the SuperFrost button *Fig. 2 (13)*.
▷ The child lock symbol *Fig. 2 (18)* shines. c flashes in the display.
When c0 is indicated in the display:
▶ to deactivate the child lock, briefly press the SuperFrost button *Fig. 2 (13)*.
▷ The child lock symbol *Fig. 2 (18)* goes out. c flashes in the display.
▶ To deactivate the set-up mode: press On/Off button, freezer compartment *Fig. 2 (9)*.
-or-
▶ Wait for 5 minutes.
▷ The temperature is indicated again in the temperature display.

5.2 Door alarm

For the fridge and freezer compartments
An audible warning sounds if the door is open for longer than 60 seconds.
The audible warning stops automatically when the door is closed.

5.2.1 Muting the door alarm

The audible alarm can be muted when the door is open. The sound switch-off function is active as long as the door is left open.
▶ Press alarm button *Fig. 2 (15)*.
▷ The door alarm is silenced.

5.3 Temperature alarm

The audible alarm sounds if the freezer temperature is not cold enough.
The temperature display and the alarm symbol *Fig. 2 (16)* flash at the same time.

The cause of the temperature being too high may be:

- warm fresh food was placed inside
- too much warm ambient air flowed in when rearranging and removing food
- Prolonged power outage
- the appliance is faulty

EN

The audible alarm is automatically silenced, the alarm symbol *Fig. 2 (16)* goes out and the temperature display stops flashing when the temperature is sufficiently cold again.

If the alarm status persists: (see 7 Malfunctions) .

Note
Food may be spoilt if the temperature is not cold enough.
▶ Check the quality of the food. Do not consume spoiled food.

5.3.1 Muting the temperature alarm

The audible alarm can be muted. When the temperature is sufficiently cold again, the alarm function is active again.
▶ Press alarm button *Fig. 2 (15)*.
▷ The audible alarm is silenced.

5.4 Refrigerator compartment

The natural circulation of air in the refrigerator compartment results in zones differing in temperature. It is coldest directly above the vegetable drawers and at the rear wall. It is warmest at the top front of the compartment and in the door.

5.4.1 Food refrigeration

Note
The energy consumption increases and the cooling performance decreases if the ventilation is inadequate.
▶ Always keep the air slits of the fan free.

▶ Store perishable food such as ready-to-serve dishes, meat products and sausages in the coldest zone. Place butter and preserves in the upper area and in the door (see 1 Appliance at a glance) .
▶ Use recyclable plastic, metal, aluminium and glass containers and cling film for wrapping.
▶ Always store raw meat and fish in clean, sealed containers on the bottom shelf of the refrigerator, to prevent them coming into contact with or dripping onto other foods.
▶ Always store liquids and food which is subject to odour or taste transfer in closed containers or cover them.
▶ Use the front area of the refrigerator compartment floor only for briefly putting down cooled products, e.g. when rearranging and sorting. However do not leave cooled products there otherwise they may be pushed back or tipped over when the door is closed.
▶ Do not store food too close together to enable good air circulation.

5.4.2 Setting the temperature

The temperature depends on the following factors:
- the frequency of opening the door
- how long the door is open for
- the room temperature of the installation location
- the type, temperature and quantity of the food

The temperature can be set from 9 °C to 1 °C, the recommended temperature is 5 °C.
▶ For a higher temperature setting: press Up button, refrigerator compartment *Fig. 2 (3)*.
▶ For a lower temperature setting: press Down button, refrigerator compartment *Fig. 2 (4)*.
▷ When the button is pressed for the first time, the previously set value is indicated, flashing, in the refrigerator compartment temperature display.
▶ To change the temperature in 1 °C steps: briefly press the button.
▶ To change the temperature continuously: hold down the button.
▷ The value is displayed flashing during the setting operation.
▷ The actual temperature is displayed about 5 s after the last press of a button. The temperature slowly adjusts to the new value.

5.4.3 SuperCool



With SuperCool you switch to the highest cooling performance to reach lower cooling temperatures. Use SuperCool, to rapidly cool large amounts of food.

When SuperCool is activated, the fan* may run. The appliance operates with maximum cooling performance, which means that the noise of the refrigeration unit may be temporarily louder.

The SuperCool function uses slightly more energy.

Cooling with SuperCool
▶ Briefly press SuperCool button *Fig. 2 (7)*.
▷ The SuperCool symbol *Fig. 2 (8)* lights up in the display.
▷ The cooling temperature drops to the coldest value. SuperCool is activated.
▷ SuperCool is automatically deactivated after 12 hours. The appliance continues to operate in the energy-saving, normal mode.

To prematurely deactivate SuperCool
▶ Briefly press SuperCool button *Fig. 2 (7)*.
▷ The SuperCool symbol *Fig. 2 (8)* goes out in the display.
▷ SuperCool is deactivated.

5.4.4 Fan*



With the fan you can rapidly cool large quantities of fresh food or achieve a relatively even distribution of temperature across all the storage levels.

The forced-air cooling is to be recommended:
- at high room temperature (above33 °C)
- at high humidity

The forced-air cooling uses slightly more energy. To save energy, the fan switches off automatically when the door is open.

Switching on the fan*
▶ Briefly press the fan button *Fig. 2 (5)*.
▷ The fan symbol *Fig. 2 (6)* shines.
▷ The fan is active. In some appliances, the fan is only activated when the compressor is running.

To switch off the fan*
▶ Briefly press the fan button *Fig. 2 (5)*.
▷ The fan symbol *Fig. 2 (6)* goes out.
▷ The fan is switched off.

5.4.5 Shelves

Moving or removing shelves

The shelves are prevented from being pulled out accidentally by pull out stops.

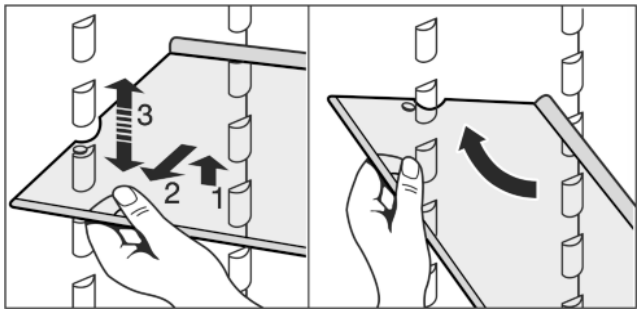

Fig. 3

- ▶ Lift the shelf and pull forward a little.
- ▶ Adjust the height of the shelf. To do this move the slots along the supports.
- ▶ In order to remove the shelf fully, place it at a slant and pull out towards the front.
- ▶ Insert shelf with the raised edge pointing upwards at the back.
- ▷ The food does not freeze onto the rear wall.

Dismantling shelves

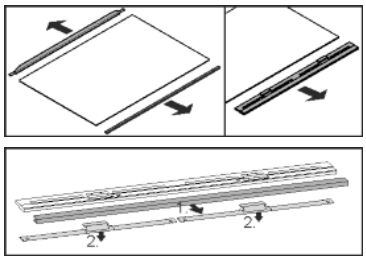

- ▶ The shelves can be dismantled for cleaning.

5.4.6 Using the sectioned shelf

- ▶ Slide the sectioned shelf under, as shown in the illustration.

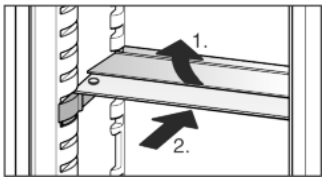

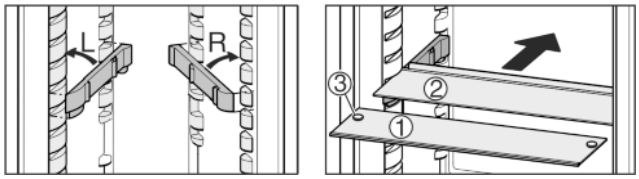

Fig. 4

- ▶ Attach the support rails, paying attention to the right (R) and left (L) part!
- ▶ The glass shelf with stop face (2) has to be at the back.
- ▶ The glass plate (1) with pull-out stops must be at the front so that the stops (3) face downwards.

5.4.7 VarioSafe

The VarioSafe provides space for small items of food and packages, tubes and jars.

Using VarioSafe

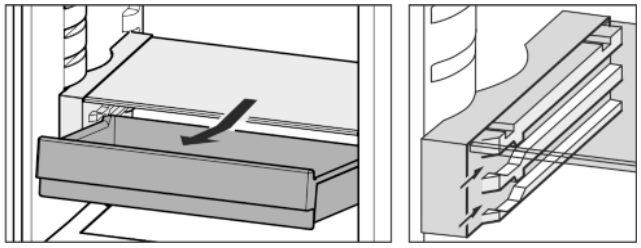

Fig. 5

- ▶ The VarioSafe drawer can be taken out and pushed in at two different heights.
- ▶ The VarioSafe can also be height-adjusted as a whole.
- ▶ To remove them completely, set them at an angle and pull towards you.

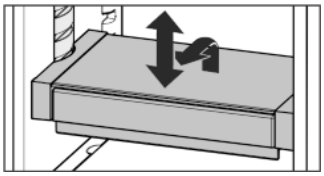

Dismantling VarioSafe

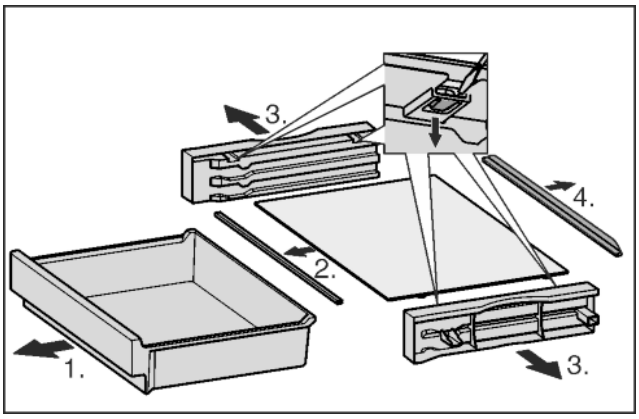

Fig. 6

- ▶ The VarioSafe can be dismantled for cleaning.

5.4.8 Door racks

Moving the storage rack

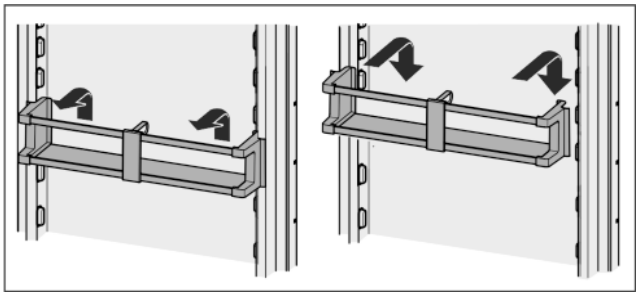

Fig. 7

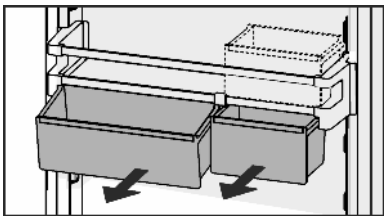

Fig. 8

You can use just one or both boxes. To store oversized bottles, just suspend one box over the bottle rack. Store the other box in the holder.

- ▶ Re-positioning the boxes: Lift them for removal and re-position them as required.

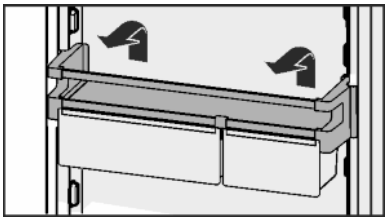

EN

Dismantling door racks

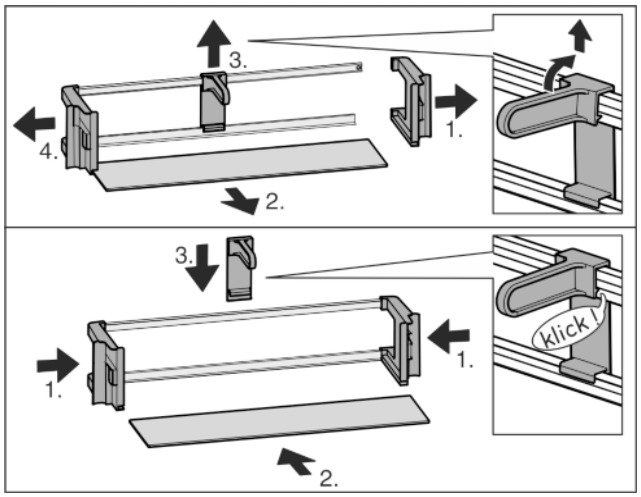

Fig. 9

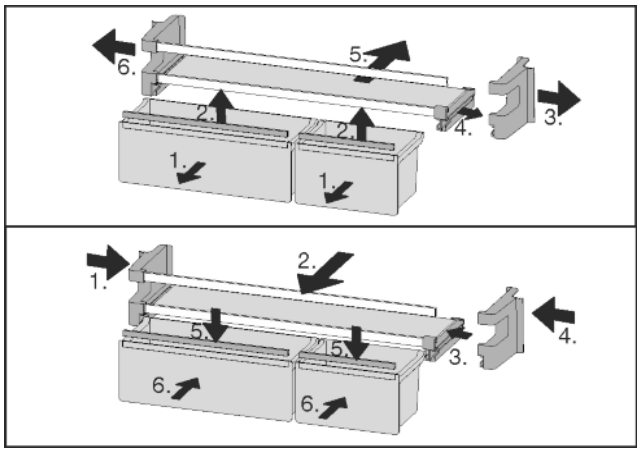

Fig. 10

▶ The door racks can be dismantled for cleaning.

5.4.9 Using the bottle holder

▶ To avoid the bottles tipping over, push the bottle holder along.

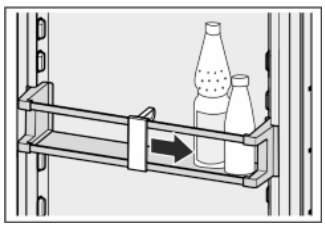

5.4.10 Butter dish

Opening/closing the butter dish

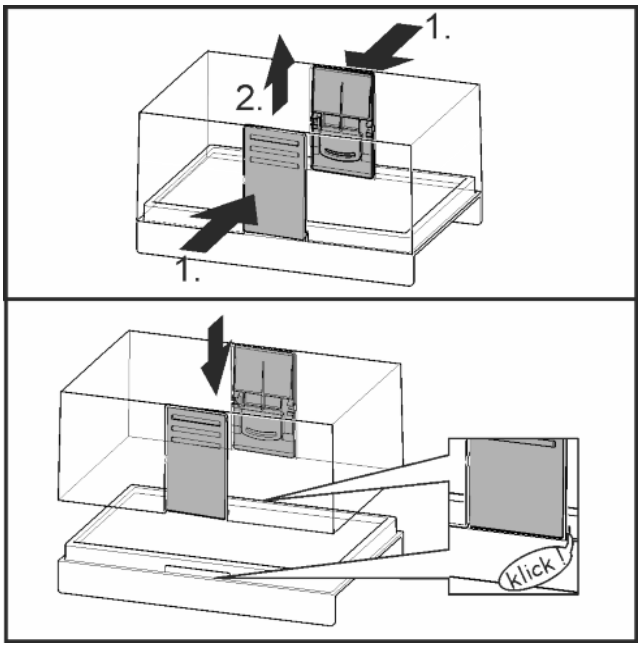

Fig. 11

Dismantling the butter dish

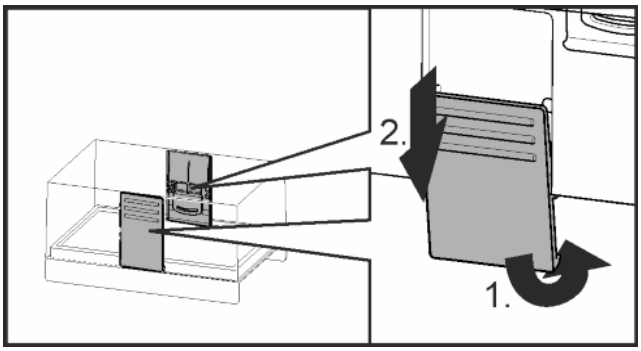

Fig. 12

▶ You can take the butter dish apart for cleaning.

5.4.11 Egg tray

You can take out and rotate the egg tray. You can use the two parts of the egg tray to mark different use-by dates, for example.

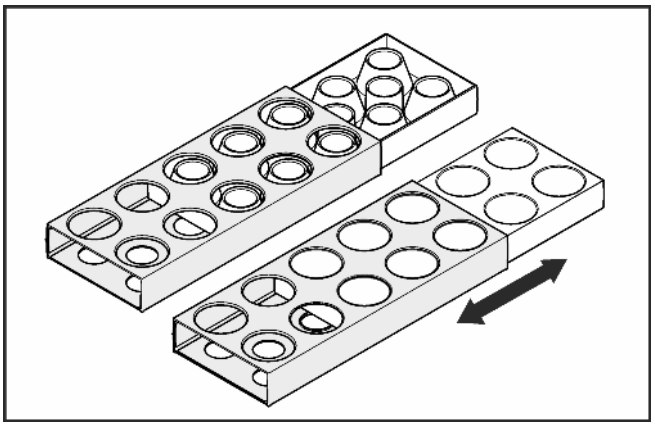

▶ Use the top part to store e.g. chicken eggs.
▶ Use the bottom part to store quails' eggs.

5.4.12 BioCool box

Controlling humidity

▶ Low humidity: Move the slide controller forward.

▶ High humidity: Move the slide controller back.

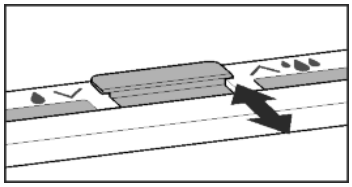

Removing the BioCool box

BioCool box on extendible rails:

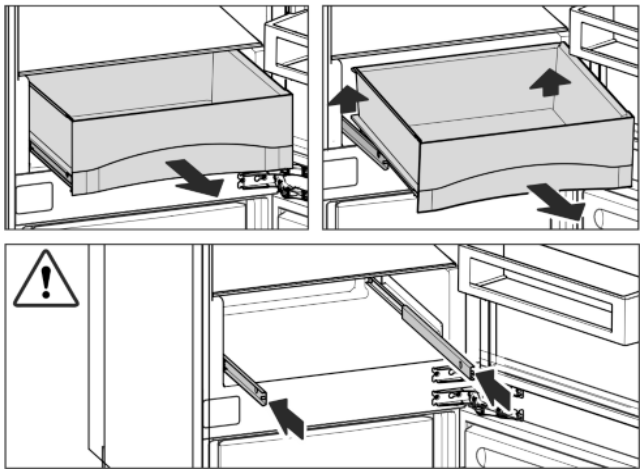

Fig. 13

▶ Pull out the drawer, lift it at the back and remove it from the front.
▶ Slide the rails in.
▶ BioCool box can be removed for cleaning.

5.5 Freezer compartment

You can store frozen food, make ice cubes and freeze fresh food in the freezer compartment.

5.5.1 Freezing food

The rating plate indicates the maximum quantity of fresh food you can freeze within 24 hours (see 1 Appliance at a glance) under “Freezing capacity ... kg/24h”.

Each drawer can hold a max. of 25 kg of frozen food.

The shelves can each be loaded with 35 kg of frozen food.

A vacuum is generated after the door is closed. After closing the door, wait for about 1 minute and then it opens more easily.

CAUTION

Risk of injury due to broken glass!
Bottles and cans containing drinks may burst when being frozen. This applies particularly to sparkling drinks.
▶ Do not freeze bottles and cans containing drinks!

So that the food is rapidly frozen through to the core, do not exceed the following quantities per pack

- Fruit, vegetables up to 1 kg
- Meat up to 2.5 kg

▶ Pack the food in portions in freezer bags, reusable plastic, metal or aluminium containers

5.5.2 Thawing food

- in the refrigerator compartment
- in a microwave oven
- in a conventional or fan oven
- at room temperature

▶ Remove only as much food as is required. Use thawed food as quickly as possible.
▶ Food once thawed should be re-frozen only in exceptional cases.

5.5.3 Setting the temperature in the freezer compartment

The appliance is pre-set for normal operation.

The temperature can be set between -14 °C and -26 °C, the recommended temperature is -18 °C.

▶ To set the temperature higher: press Up button, freezer compartment *Fig. 2 (11)*.
▶ To set the temperature lower: press Down button, freezer compartment *Fig. 2 (12)*.
▷ When the button is pressed the first time, the previous value is indicated in the temperature display of the freezer compartment.
▶ To change the temperature in 1 °C steps: briefly press the button.

-or-

▶ To change the temperature continuously: hold down the button.

▷ The value is displayed flashing during the setting operation.
▷ The actual temperature is displayed approx. 5 seconds after the button is last pressed. The temperature gradually adjusts to the new value.

5.5.4 SuperFrost

With this function you can freeze fresh food quickly through to the core. The appliance operates with maximum refrigeration. The noise of the refrigeration unit may be temporarily louder as a result. ✱✱

You can freeze as many kilograms of fresh food within 24 hrs as is indicated on the type plate under “Freezing capacity ... kg/24hrs”. This maximum freezing quantity can vary depending on model and climate class.

You have to activate SuperFrost in good time, depending on how much fresh food is to be frozen: about 6 hours before placing the food inside in case of small amounts and about 24 hours in advance in case of the maximum amount of food to be frozen.

Wrap produce and spread it out as far as possible. Do not allow produce to be frozen to touch produce that is already frozen to prevent the latter thawing.

You do not have to activate SuperFrost in the following cases:

- when placing frozen food in the freezer
- when freezing up to approx. 2 kg fresh food daily

Freezing with SuperFrost

▶ Briefly press the SuperFrost button *Fig. 2 (13)* once.
▷ The SuperFrost symbol *Fig. 2 (14)* shines.
▷ The freezing temperature drops, the appliance operates with the maximum cooling capacity.
For a smaller quantity of produce to be frozen:
▶ wait approx. 6 h.
▶ Place wrapped produce in the top drawers.
For the maximum quantity of produce to be frozen:
▶ wait approx. 24 h.
▶ Remove top drawers and place produce directly on the top shelves.
▷ SuperFrost is automatically deactivated. Depending on the quantity placed inside, after 30 h at the earliest, 65 h at the latest.
▷ The SuperFrost symbol *Fig. 2 (14)* extinguishes once freezing is completed.
▶ Place produce in the drawers and push the latter back in again.
▷ The appliance continues to operate in the energy-saving, normal mode.

EN

5.5.5 Drawers

Note
The energy consumption increases and the cooling performance decreases if there is insufficient ventilation.
For appliances with NoFrost:
▶ Leave the bottom drawer in the appliance!
▶ Always keep the air slits of the fan free at the rear wall!

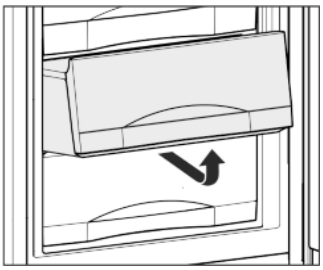

▶ To store frozen food directly on the shelves pull the drawer forward and lift it out.

5.5.6 Shelves

Moving shelves

▶ To remove the shelf: lift up at the front and pull out.
▶ To put the shelf back: simply push in as far as it will go.

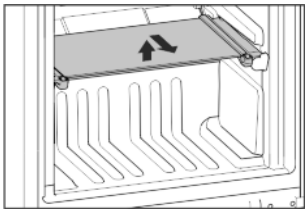

Removing shelves

▶ The shelves may be removed for cleaning.

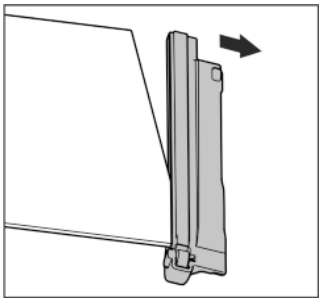

5.5.7 VarioSpace

You can remove the shelves and drawers. This leaves more room for larger food items such as poultry, meat, large game and tall baked goods, which can be frozen whole before further preparation.

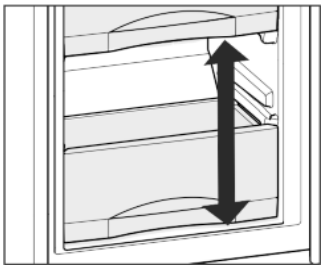

▶ Each drawer can hold max. 25 kg of frozen food.
▶ The shelves can each be loaded with 35 kg of frozen food.

5.5.8 Information system

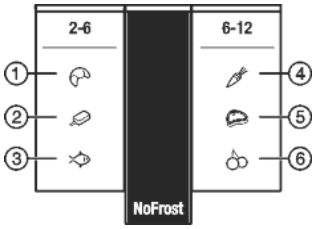

Fig. 14

(1) Bread
(2) Ice cream
(3) Fish
(4) Vegetables
(5) Meat
(6) Fruit

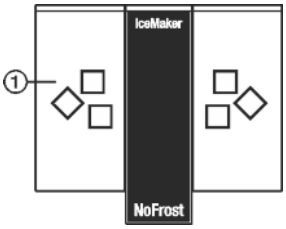

Fig. 15

(1) Ice cubes*

The figures indicate the storage time in months for several types of frozen food in each case. Storage times given are guide times.

5.5.9 Ice cube tray*

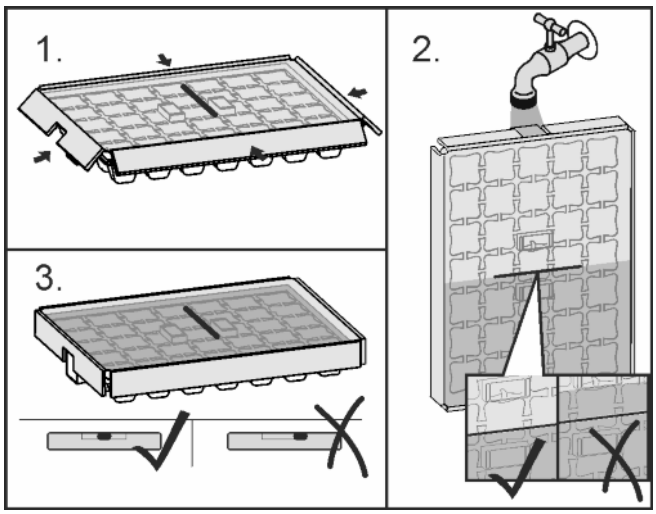

Fig. 16

When the water is frozen:
▶ Hold ice cube tray under hot water for a short time.
▶ Remove the lid.
▶ Gently turn the ends of the ice cube tray in opposite directions and release the cubes.

Dismantling the ice cube tray

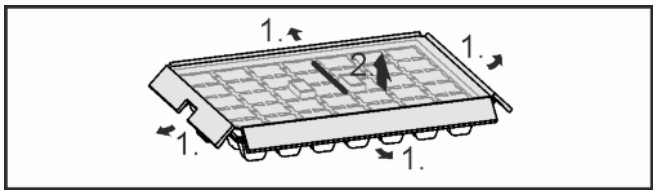

Fig. 17

▶ You can take the ice cube tray apart for cleaning.

5.5.10 Freezer pack

Freezer packs prevent the temperature rising too quickly should there be a power cut.

Using freezer packs

▶ Put the fully frozen freezer packs on the frozen food in the top front section of the freezer compartment.

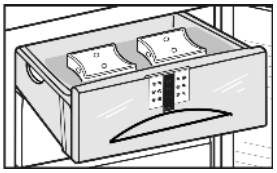

*** Depending on model and options**

5.5.11 IceMaker*

The IceMaker produces ice cubes using the water container located in the refrigerator compartment. The water container can also be used to provide chilled drinking water.

The IceMaker is in the top drawer of the freezer compartment. The drawer is marked “IceMaker”.

Make certain that the following conditions are met:

- The appliance is level.
- The appliance is connected.
- The freezer compartment is switched on.
- The water tank was cleaned with water and is filled.

Switching on the IceMaker*

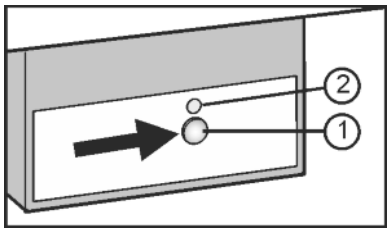

Fig. 18

▶ Pull out the drawer.
▶ Press the On/Off button *Fig. 18 (1)* so that the LED *Fig. 18 (2)* shines.
▶ Push in the drawer.
▷ The IceMaker symbol *Fig. 2 (19)* shines.

Note
▶ The IceMaker produces ice cubes only if the drawer is fully closed.

Producing ice cubes*

The production capacity depends on the freezer temperature. The lower the temperature, the more ice cubes can be produced in a specific period.

The ice cubes drop from the IceMaker into the drawer. When a certain filling level has been reached, no further ice cubes are produced. The IceMaker does not fill the drawer right up to the brim.

Distribute the ice cubes evenly in the drawer to increase the capacity.

If large quantities of ice cubes are needed, the complete IceMaker drawer can be exchanged for the adjacent drawer. When the drawer is closed, the IceMaker automatically re-commences production.

Once the IceMaker has been switched on for the first time, it may take up to 24 hours until the first ice cubes are produced.

Note
When the appliance is used for the first time and if it has been out of use for a long time, particles may collect in the IceMaker and/or water conduit.
▶ Do not use or consume ice cubes that have been made 24 hours after the first ice cubes are made.

Filling the water tank*

WARNING
Risk of poisoning!
▶ The water quality must comply with the drinking water regulations of the respective country in which the appliance is operating (e.g. 98/83/EC, NSF 61).
▶ Only fill with drinking water.
▶ The IceMaker is solely intended to produce ice cubes in quantities customary for household use and must be operated using water appropriate for this purpose.
▶ If the IceMaker is switched off or not used for a longer period of time, empty the water tank.

NOTICE
Risk of damage to the IceMaker!
Liquids containing sugar, such as soft drinks, fruit juices or similar, gum up the pump and therefore lead to total pump failure and, as a consequence, to damage to the IceMaker.
▶ Fill the water tank with cold drinking water only! Do not use liquids containing sugar, such as soft drinks, fruit juices or similar!

Note
Through the use of filtered, decarbonised water, drinking water with the best possible flavour is achieved, and this can be used for problem-free production of ice cubes.
This water quality can be achieved using a table water filter of the kind available in trade retail outlets.
▶ Always fill the water tank only with filtered, decarbonised drinking water.

The IceMaker is supplied with water from a water tank in the refrigerator compartment (see 1 Appliance at a glance) .

When the water tank is empty, the water tank symbol *Fig. 2 (20)* shines.

Before initial operation:
▶ clean the water tank thoroughly with water to remove any dust etc.

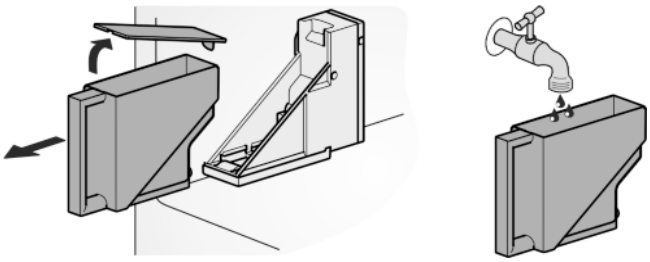

Fig. 19

▶ Pull the water tank forwards.
▶ Remove cover and fill tank with water.
▶ Replace the lid, put the filled water tank back into the holder and push it right to the back.

Note
▶ The water reservoir has to be slid all the way into the bracket provided for the purpose in the refrigerator compartment!

Setting the water intake time*

The opening time of the IceMaker valve can be set to affect the size of the ice cubes produced.

The water intake time can be set in stages from **E1** (short intake time) to **E8** (long intake time). The intake is preset at **E3**.
▶ To activate the setting mode: press the SuperFrost button *Fig. 2 (13)* for about 5 s.
▷ The display indicates **c**.
▷ Themenu symbol *Fig. 2 (17)* shines.

EN

- ▶ Using the Up setting button, freezer compartment *Fig. 2 (11)* and Down setting button, freezer compartment *Fig. 2 (12)* select E.
- ▶ To confirm: briefly press the SuperFrost button *Fig. 2 (13)*.
- ▶ To increase the water intake time: press the Up setting button, freezer compartment *Fig. 2 (11)*.
- ▶ To reduce the water intake time: press the Down setting button, freezer compartment *Fig. 2 (12)*.
- ▶ To confirm: press the SuperFrost button *Fig. 2 (13)*.
- ▶ To deactivate the setting mode: press the On/Off button, freezer compartment *Fig. 2 (9)*.



-or-

- ▶ Wait for 5 minutes.

▷ The temperature is indicated again in the temperature display.

Switching off the IceMaker*

If no ice cubes are needed, the IceMaker can be switched off independently of the freezer compartment.

When the IceMaker is switched off, the IceMaker drawer can also be used for freezing and storing food.

- ▶ Press the On/Off button for about 1 second until the LED goes out.

▷ The IceMaker symbol *Fig. 2 (19)* goes out.

- ▶ Clean the IceMaker.

▷ This ensures that no water or ice remains in the IceMaker.

6 Maintenance

6.1 Defrosting with NoFrost

The NoFrost system automatically defrosts the appliance.

Refrigerator compartment:

The defrost water evaporates due to the compressor heat. Drops of water on the rear wall are perfectly normal.

- ▶ Regularly clean the drain opening to allow the water to flow away (see 6.2 Cleaning the appliance) .

Freezer compartment:

The moisture condenses on the evaporator, is periodically defrosted and evaporates.

- ▶ The appliance does not have to be manually defrosted.

6.2 Cleaning the appliance

Clean the appliance regularly.

WARNING

Risk of injury and damage as a result of hot steam!
Hot steam can lead to burns and can damage the surfaces.

- ▶ Do not use any steam cleaners!

NOTICE

Incorrect cleaning damages the appliance!

- ▶ Do not use cleaning agents in concentrated form.
- ▶ Do not use any scouring or abrasive sponges or steel wool.
- ▶ Do not use any sharp or abrasive cleaning agents, nor any that contain sand, chloride or acid.
- ▶ Do not use chemical solvents.
- ▶ Do not damage or remove the type plate on the inside of the appliance. It is important for the customer service.
- ▶ Do not pull off, bend or damage cables or other components.
- ▶ Do not allow any cleaning water to enter the drain channel, ventilation grille or electrical parts.
- ▶ Please use soft cleaning cloths and a universal pH-neutral cleaning agent.
- ▶ Please use cleaning and care products suitable for contact with foodstuffs in the appliance interior.

- ▶ **Empty appliance.**
- ▶ **Pull out the power plug.**



- ▶ Clean **plastic outer and inner surfaces** with lukewarm water and a little washing-up liquid.
- ▶ Clean **drain hole**: Remove deposits with a narrow instrument, e.g. a cotton bud.

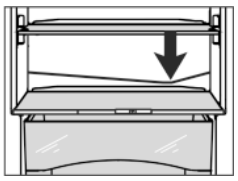

- ▶ Empty **water collect tray**: remove water tank. Carefully unlatch tray at front and then remove from below.*
- ▶ Clean the **water container** by hand using lukewarm water and a small amount of dish washing liquid.*
- ▶ The **water container** and **cover** are dishwasher safe up to max. 60° *

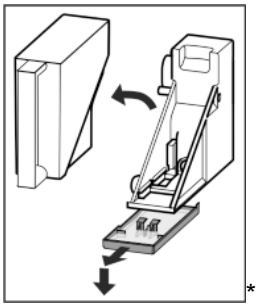

*

- ▶ Most of the **parts** can be dismantled for cleaning: see the relevant chapter.
- ▶ **Clean drawers** by hand with lukewarm water and a little washing up liquid.
- ▶ All the **other fittings** can be put in the dishwasher.
- ▶ Only use a damp cloth to clean the **telescopic rails**. The grease in the runners is for lubrication purposes and must not be removed.

Note

- ▶ Clean water reservoir when not in use for more than 24 h.*

After cleaning:

- ▶ Wipe dry the appliance and items of equipment.
- ▶ Connect the appliance and switch it on again.
- ▶ Switch on SuperFrost (see 5.5.4 SuperFrost) .
  When the temperature is sufficiently cold:
- ▶ Put the food back inside.

6.3 Cleaning the IceMaker*

The drawer of the IceMaker has to be emptied and slid in.

- ▶ To activate the setting mode: press the SuperFrost button *Fig. 2 (13)* for about 5 s.

▷ The display indicates c.

▷ The menu symbol *Fig. 2 (17)* shines.

- ▶ Using the Up setting button, freezer compartment *Fig. 2 (11)*/ Down setting button, freezer compartment *Fig. 2 (12)* select I.
- ▶ To confirm: press the SuperFrost button *Fig. 2 (13)*.

▶ Using the Up setting button, freezer compartment *Fig. 2 (11)*/ Down setting button, freezer compartment *Fig. 2 (12)* select Ic.



▶ To confirm: press the SuperFrost button *Fig. 2 (13)*.
▷ The IceMaker moves into the cleaning position and switches off.
▶ To deactivate the setting mode: press the On/Off button, freezer compartment *Fig. 2 (9)*.

-or-

▶ Wait for 2 minutes.

▷ The temperature is indicated again in the temperature display.
▶ Remove the drawer.
▶ Clean the ice cube tray and drawer with warm water. If necessary, use mild washing-up liquid. Then rinse.
▶ Slide in the drawer again.
▶ Leave the IceMaker switched off in this position.

-or-

NOTICE
Rinse agent residue in the ice compartment and drawer.
Nausea or irritation of the mucous membrane.
▶ Remove rinse agent residue: Discard the first three batches of ice cubes.

▶ Switch the IceMaker on (see 5.5.11 IceMaker*) .

6.4 Customer service

First check whether you can correct the fault yourself by reference to the list (see 7 Malfunctions) . If this is not the case, please contact the customer service whose address is given in the enclosed customer service list.

WARNING
Risk of injury if repair work is not carried out professionally!
▶ Have any repairs and action - not expressly specified - on the appliance and mains cable carried out by service personnel only. (see 6 Maintenance)

▶ Read the appliance designation *Fig. 20 (1)*, service No. *Fig. 20 (2)* and serial No. *Fig. 20 (3)* off the type plate located inside the appliance on the left-hand side.

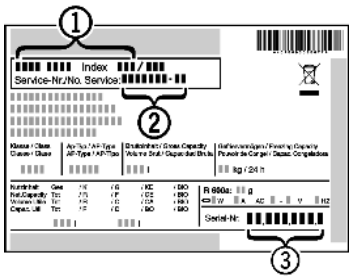

Fig. 20

▶ Notify the customer service, specifying the fault, appliance designation *Fig. 20 (1)*, service No. *Fig. 20 (2)* and serial No. *Fig. 20 (3)*.
▷ This will help us to provide you with a faster and more accurate service.
▶ Keep the appliance closed until the customer service arrives.
▷ The food will stay cool longer.
▶ Pull out the mains plug (not by pulling the connecting cable) or switch off the fuse.

7 Malfunctions

Your appliance is designed and manufactured for a long life span and reliable operation. If a malfunction nonetheless occurs during operation, check whether it is due to a handling error. In this case you will have to be charged for the costs incurred, even during the warranty period. You may be able to rectify the following faults yourself:

Appliance does not work.
→ The appliance is not switched on.
▶ Switch on the appliance.
→ The power plug is not properly inserted in the wall socket.
▶ Check power plug.
→ The fuse of the wall socket is not in order.
▶ Check fuse.

The compressor runs for a long time.
→ The compressor switches to a low speed when little cold is needed. Although the running time is increased as a result, energy is saved.
▶ This is normal in energy-saving models.
→ SuperFrost is activated.
▶ The compressor runs for longer in order to rapidly cool the food. This is normal.
→ SuperCool is activated.
▶ The compressor runs for longer in order to rapidly cool the food. This is normal.

A LED on the bottom rear of the appliance (at the compressor) flashes repeatedly every 5 seconds*.
→ There is a fault.
▶ Please contact the after-sales service (see 6 Maintenance) .

Excessive noise.
→ Due to the various speed steps, speed-regulated* compressors can generate different running noises.
▶ The sound is normal.

A bubbling and gurgling noise.
→ This noise comes from the refrigerant flowing in the refrigeration circuit.
▶ The sound is normal.

A quiet clicking noise.
→ The noise is produced whenever the refrigeration unit (motor) automatically switches on or off.
▶ The sound is normal.

A hum. It is briefly a little louder when the refrigeration unit (the motor) switches on.
→ The refrigeration increases automatically when the SuperFrost, function is activated, fresh food has just been placed in the appliance or the door has been left open for a while.
▶ The sound is normal.
→ The refrigeration increases automatically when the SuperCool function is activated, fresh food has just been placed in the appliance or the door has been left open for a while.
▶ The sound is normal.
→ The ambient temperature is too high.
▶ Solution: (see 1.2 Appliance range of use)

A low hum.
→ The sound is produced by air flow noise of the fan.
▶ The sound is normal.

Vibration noises
→ The appliance is not standing firmly on the floor. As a result objects and adjacent units start to vibrate when the refrigerator is running.
▶ Check the installation and realign the appliance.
▶ Keep bottles and jars apart.

Flow sound at the soft stop mechanism.
→ The noise is produced when the door is opened and closed.
▶ The sound is normal.

EN

Hum of the water tank pump.*
→ When water is pumped out of the water reservoir, a brief hum of the pump can be heard.
▶ The sound is normal.

The temperature display indicates: F0 to F9
→ There is a fault.
▶ Please contact the after-sales service (see 6 Maintenance) .

The temperature display reads:FE*
→ There is a fault.
▶ Please contact the after-sales service (see 6 Maintenance) .

Power failure flashes in the temperature display . The highest temperature reached during power failure is indicated in the temperature display.
→ The freezer temperature rose too high over the last hours or days due to a power failure or power interruption. When the power interruption is over, the appliance will continue to operate in the last temperature setting.
▶ To cancel the display of the warmest temperature: press alarm button *Fig. 2 (15)*.
▶ Check the quality of the food. Do not consume spoiled food. Do not re-freeze thawed food.

DEMO shines in the temperature display.
→ The demo mode is activated.
▶ Please contact the after-sales service (see 6 Maintenance) .

The outer surfaces of the appliance are warm*.
→ The heat of the refrigeration circuit is used to prevent condensate from forming.
▶ This is normal.

The IceMaker cannot be switched on. *
→ The appliance and therefore the IceMaker are not connected.
▶ Connect the appliance to the mains (see 4 Putting into operation) .

The IceMaker does not make any ice cubes.*
→ The IceMaker is not switched on.
▶ Switch on the IceMaker.
→ The drawer of the IceMaker is not properly closed.
▶ Close the drawer properly.
→ The water tank is not correctly inserted.
▶ Insert the water tank.
→ There is not enough water in the water tank.
▶ Fill the water tank.

The LED of the IceMaker flashes.*
→ There is not enough water in the water tank.
▶ Fill the water tank.
→ If the LED flashes and the water tank is full, the IceMaker is defective.
▶ Please contact the after-sales service (see 6 Maintenance) .

The temperature is not cold enough.
→ The door of the appliance is not properly closed.
▶ Close the door of the appliance.
→ Insufficient ventilation.
▶ Keep ventilation grille clear, and clean it.
→ The ambient temperature is too high.
▶ Solution: (see 1.2 Appliance range of use) .
→ The appliance was opened too frequently or for too long.
▶ Wait to see whether the appliance reaches the required temperature by itself. If not, please contact the after sales service (see 6 Maintenance) .
→ Too much fresh food was placed inside without SuperFrost.
▶ Solution: (see 5.5.4 SuperFrost)
→ The temperature is incorrectly set.
▶ Set the temperature to a colder setting and check after 24 hours.
→ The appliance is too close to a source of heat (stove, heater etc).
▶ Change the position of the appliance or the source of heat.
→ The appliance was not inserted properly into the recess.
▶ Check whether the appliance was inserted correctly and the door closes properly.

Dashes ("- -") are indicated in the display.
→ The freezer temperature has risen above zero degrees due to power failure or interruption.
▶ See also "Power failure" and "".

The internal light does not come on.
→ The appliance is not switched on.
▶ Switch the appliance on.
→ The door was open for longer than 15 minutes.
▶ The internal light switches itself off automatically after about 15 minutes if the door is open.
→ The LED illumination is faulty or the cover is damaged:

WARNING
Risk of injury due to electric shock!
Live parts are located under the cover.
▶ Have the LED interior light changed or repaired only by the customer service or by specialized personnel trained for the purpose.

WARNING
Danger of injury by LED lamp!
The light intensity of the LED lighting corresponds to risk group RG 2.
If the cover is defective:
▶ Do not look into the illumination with optical lenses from the immediate proximity. This can cause injury to the eyes.

The door gasket is defective or should be replaced for other reasons.*
→ In some units, the seal around the door can be replaced. You will not need any special tools to do this.
▶ Please contact the after-sales service (see 6 Maintenance) .

The unit has iced up or condensation has formed.*
→ The door seal may have also slipped out of its groove.
▶ Check to ensure that the door seal is seated properly in the groove.

8 Decommissioning

8.1 Switching off the appliance

Note
▶ If the appliance cannot be switched off, the Child Safety function is still activated (see 5.1 Child proofing) .

8.1.1 Switching the whole appliance off via the freezer compartment

▶ Press the freezer compartment On/Off button *Fig. 2 (9)* for approx. 2 seconds.
▷ A long beep sounds.
▷ The temperature displays are dark.
▷ The appliance is switched off.

8.1.2 Switching off the refrigerator compartment

Note
Before going on holiday, or other prolonged periods of non-use
▶ You can switch the fridge compartment on/off separately.

▶ Press the refrigerator compartment On/Off button *Fig. 2 (1)* for approx. 2 seconds.
▷ The fridge temperature display *Fig. 2 (2)* is dark.
▷ The fridge compartment is switched off.

8.2 Taking the appliance out of service

▶ Empty the appliance.
▶ Put the IceMaker in the cleaning position (see 6 Maintenance) .*
▶ Switch off the appliance (see 8 Decommissioning) .
▶ Remove mains connector.
▶ Clean the appliance (see 6.2 Cleaning the appliance) .



▶ Leave the door open to prevent odour.

9 Disposing of the appliance

The appliance contains some reusable materials and should be disposed of properly - not simply with unsorted household refuse. Appliances which are no longer needed must be disposed of in a professional and appropriate way, in accordance with the current local regulations and laws.



When disposing of the appliance, ensure that the refrigeration circuit is not damaged to prevent uncontrolled escape of the refrigerant it contains (data on type plate) and oil.
▶ Disable the appliance.
▶ Pull out the plug.
▶ Cut through the connecting cable.

EN

Liebherr-Hausgeräte Ochsenhausen GmbH
Memminger Straße 77-79
88416 Ochsenhausen
Deutschland

home.liebherr.com