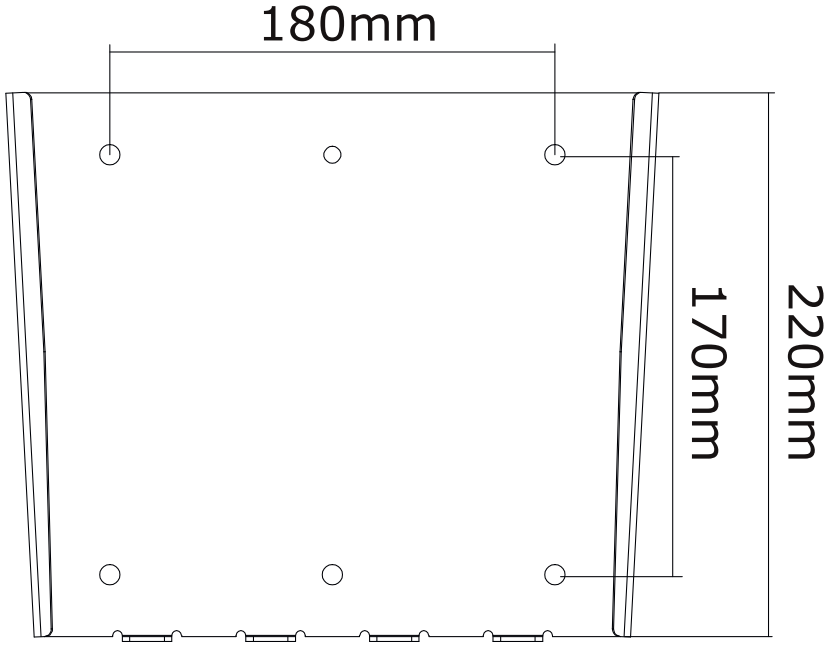


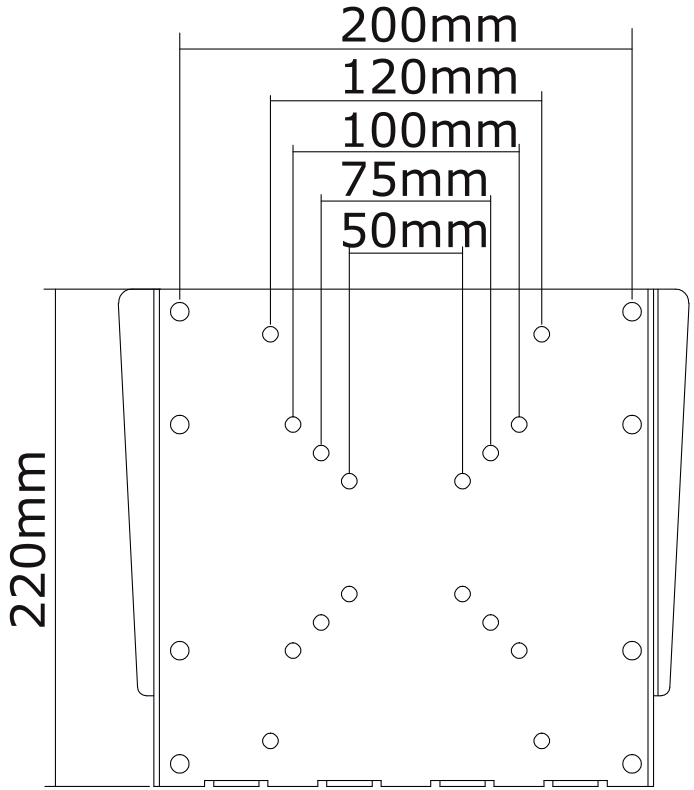




Measuring unit: mm