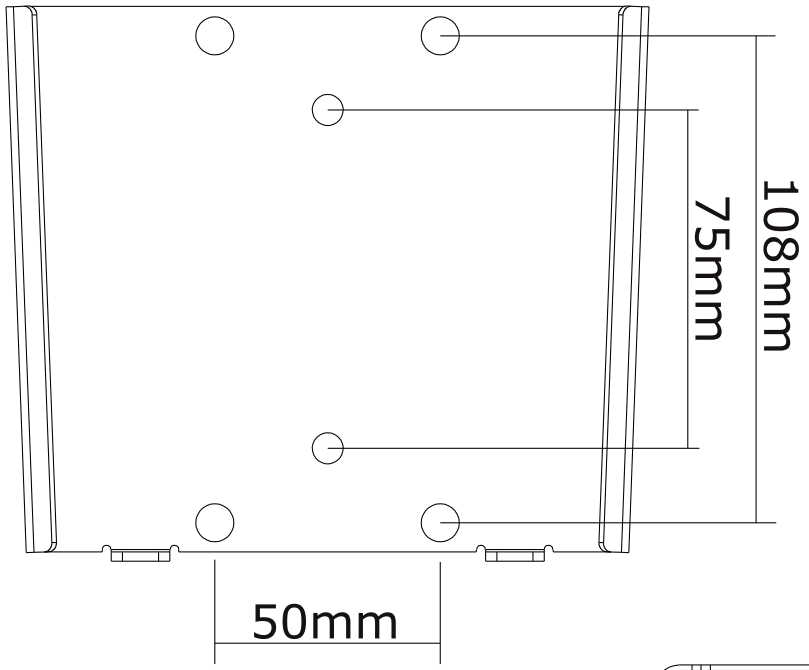

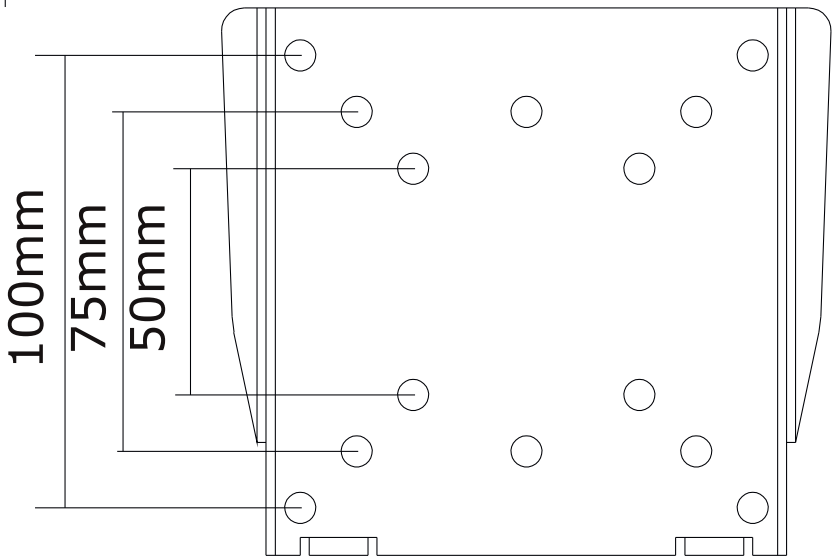

Measuring unit: mm