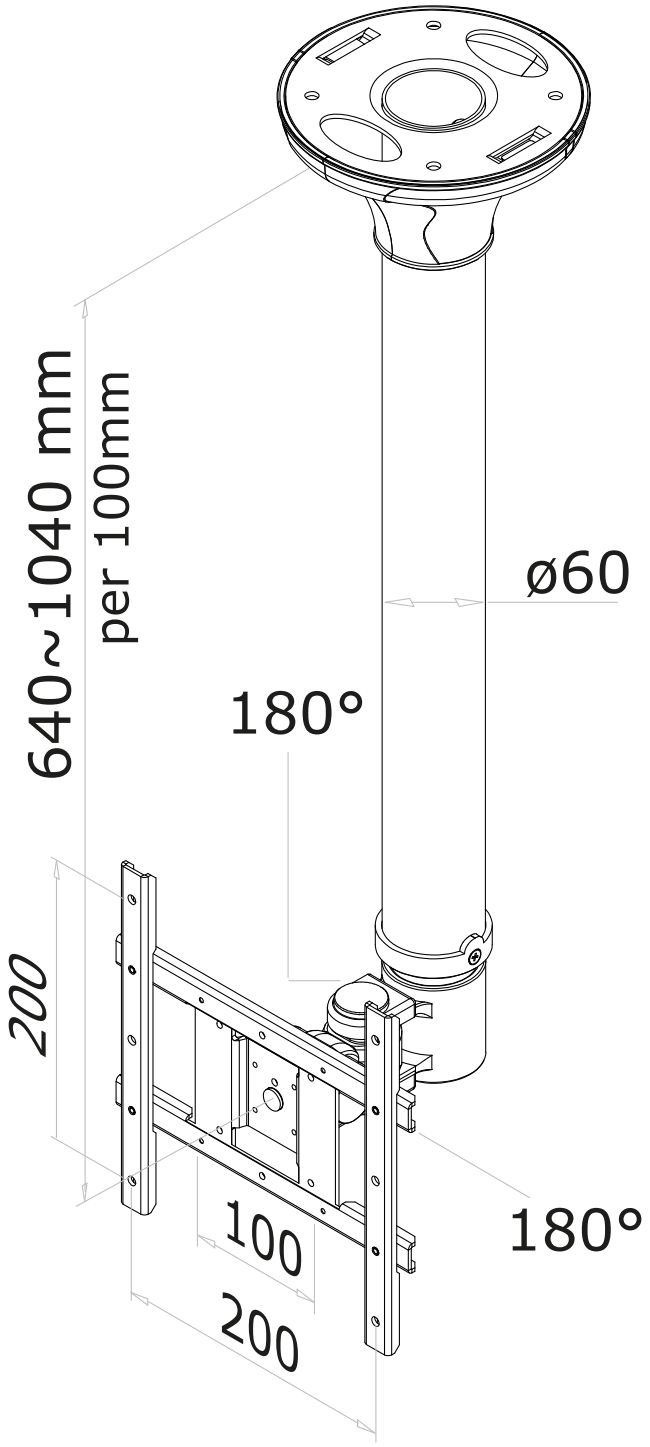

Measuring unit: mm