FPMA-D9GROMMET

NEOMOUNTS DESK MOUNT GROMMET PLATE

SPECIFICATIONS

GENERAL

Desk mount	Grommet

FUNCTIONALITY

Type	Fixed
Adjustment type	None

INFORMATION

Color	Silver
Main material	Steel
Warranty	5 year
EAN code	8717371442170

*Please note: The inch sizes stated are just an indication, combined with the weight and VESA sizes. The maximum weight and VESA size are absolute restrictions for the products and should not be exceeded.

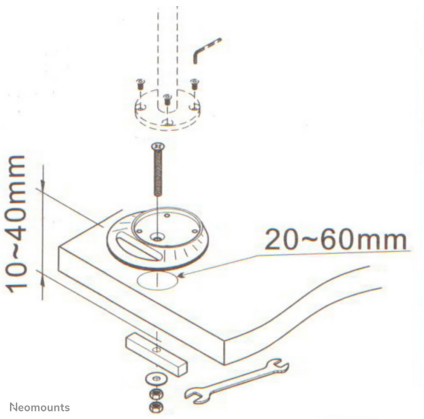

Neomounts Grommet Converter for FPMA-D910/920/930/1010/1020/1030 - Silver

The Neomounts desk grommet mount, model FPMA-D9GROMMET is the right solution to mount a monitor arm on a desk using the available cable hole on desks. This product includes the grommet and installation material. This mount must be purchased separately from the desk mount arm.

An innovative cable management conceals and routes cables through the cable holes of the grommet. Hide your cables to keep the workplace nice and tidy.

This model is suitable for the following Neomounts desk mounts:
FPMA-D910, FPMA-D920, FPMA-D930, FPMA-D930D, FPMA-D930D3, FPMA-D930D4, FPMA-D930D-5, FPMA-D930D6, FPMA-D1010, FPMA-D1020, FPMA-D1030, FPMA-D1030D, FPMA-D1030D3, FPMA-D1110, FPMA-D1120, FPMA-D1130

All installation material is included with the product.

FPMA-D9GROMMET NEOMOUNTS DESK MOUNT GROMMET PLATE

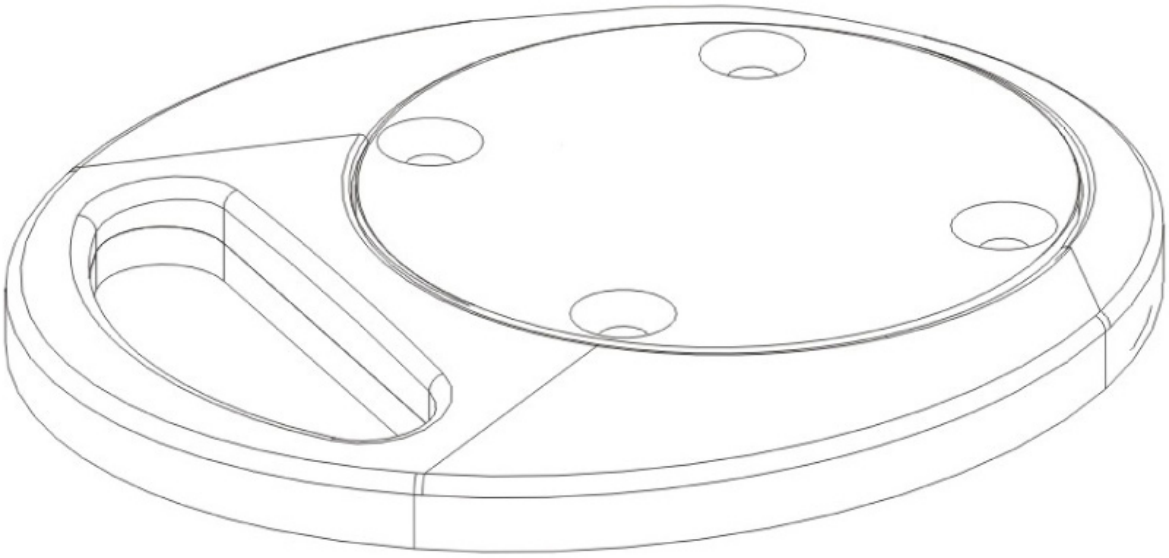

Neomounts