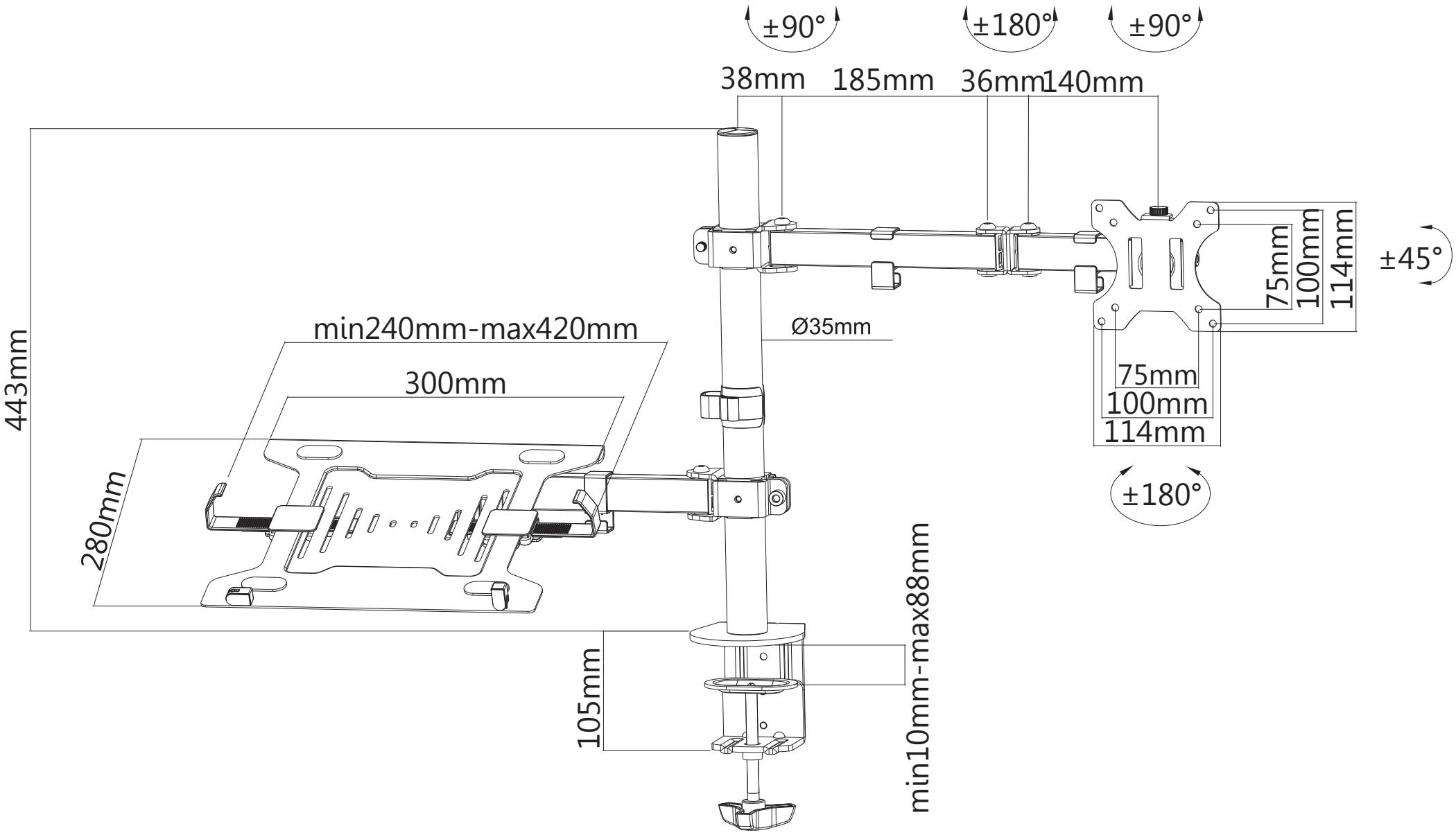
±90°
±180°
±90°
38mm
185mm
36mm
140mm
75mm
100mm
114mm
±45°
Ø35mm
min240mm-max420mm
300mm
443mm
280mm
75mm
100mm
114mm
±180°
105mm
min10mm-max88mm