Computer Power Cord - Flat NEMA 5-15P to Right-Angle NEMA 5-15-R - 1.5 ft. (18 in.)

PACF10118IN

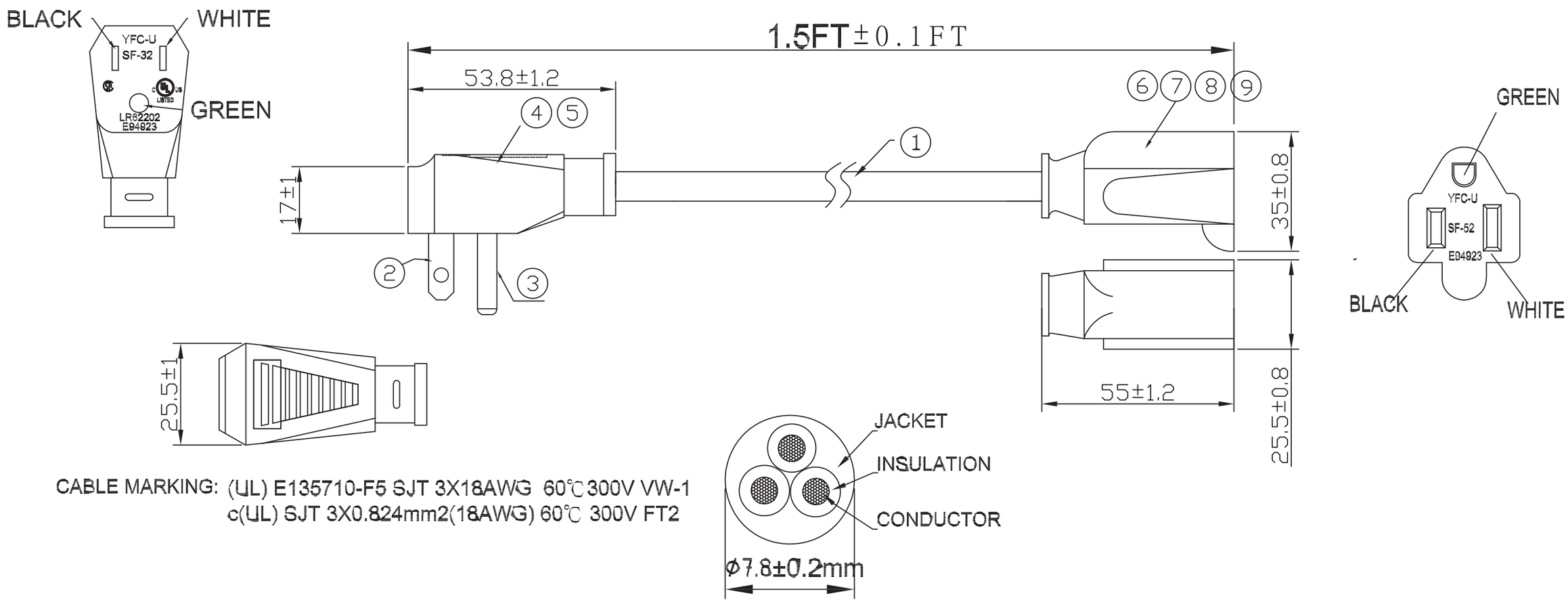

CABLE MARKING: (UL) E135710-F5 SJT 3X18AWG 60℃ 300V VW-1
c(UL) SJT 3X0.824mm2(18AWG) 60℃ 300V FT2

Electrical Performance (20°C)	
Item	Parameter
Conductor resistance	≤22.85Ω/1000m
Voltage Rating	AC 300V

NO.	ITEM	REVISION	Q'TY
9	Socket molding	Molding (SF-52) PVC	30.3 G
8	Inner BKT	5-15R inner bracket	1 PCS
7	Connector	5-15R connector, ground female	1 PCS
6	Connector	5-15R connector female	2 PCS
5	Plug molding	Molding (SF-32) PVC	31 G
4	Inner BKT	5-15P inner bracket	1 PCS
3	Connector	5-15P connector, ground	1 PCS
2	Connector	5-15P blade	2 PCS
1	Cable	SJ T 18AWGx3 60℃ BLACK	1 PCS