Operating instructions

base unit fridge

EN

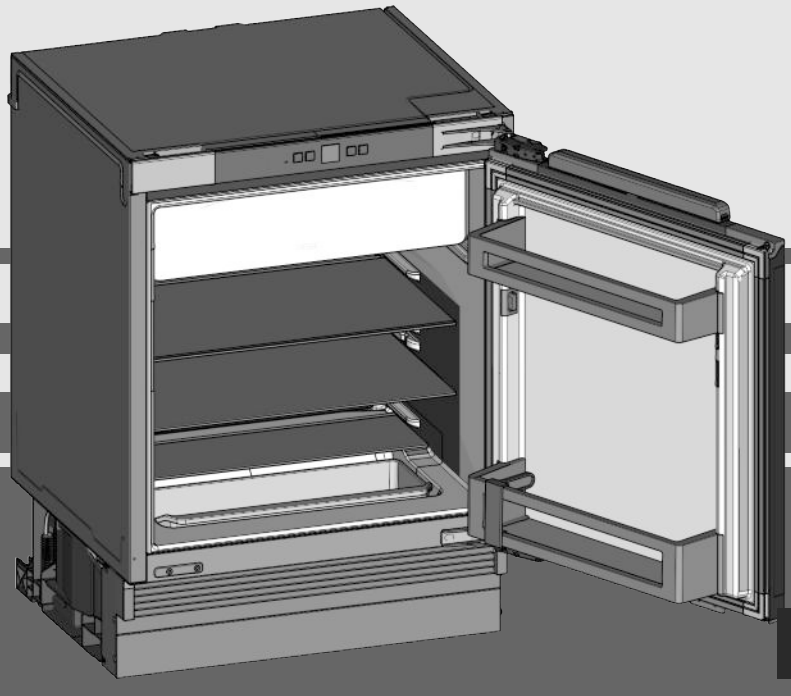

20200618 **7086642 - 00**

UIK 1510/14

LIEBHERR

Contents

1	**Appliance at a glance**	**2**
1.1	Description of appliance and equipment	2
1.2	Appliance range of use	2
1.3	Conformity	3
1.4	Product data	3
1.5	EPREL database	3
1.6	Saving energy	3
2	**General safety information**	**3**
3	**Controls and displays**	**4**
3.1	Operating and control elements	4
3.2	Temperature display	4
4	**Putting into operation**	**4**
4.1	Switching on the appliance	4
5	**Control**	**4**
5.1	Child proofing	4
5.2	Door alarm	5
5.3	Refrigerator compartment	5
5.4	Freezer compartment*	6
6	**Maintenance**	**7**
6.1	Defrosting	7
6.2	Cleaning the appliance	7
6.3	Customer service	8
7	**Malfunctions**	**8**
8	**Decommissioning**	**9**
8.1	Switching off the appliance	9
8.2	Taking the appliance out of service	9
9	**Disposing of the appliance**	**9**

The manufacturer works constantly on the further development of all the types and models. Therefore please understand that we have to reserve the right to make design, equipment and technical modifications.

To get to know all the benefits of your new appliance, please read the information contained in these instructions carefully.

The instructions apply to several models. Differences may occur. Text relating only to specific appliances is marked with an asterisk (*).

Instructions for action are marked with a ▶, the results of action are marked with a ▷.

1 Appliance at a glance

1.1 Description of appliance and equipment

Note

▶ Place food inside the appliance as shown in the diagram. This allows the appliance to save energy during operation.

▶ Shelves, drawers and baskets are arranged for optimum energy efficiency on delivery.

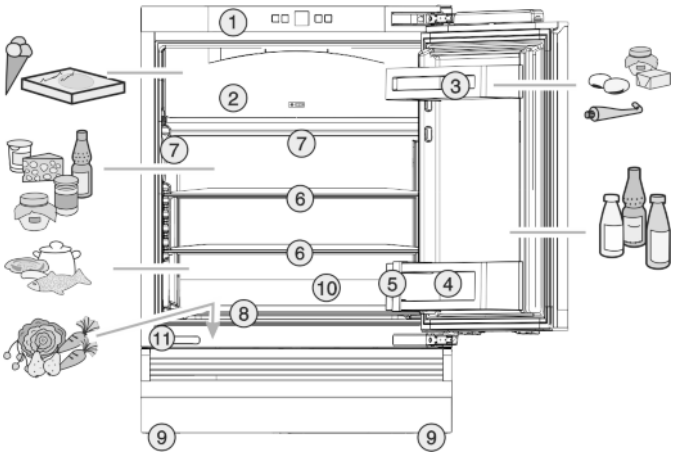

Fig. 1

(1) Operating panel
(2) Freezer compartment*
(3) Butter and cheese tray
(4) Bottle shelf
(5) Bottle rack
(6) Shelf, relocatable
(7) LED interior lighting*
(8) Vegetable bowl in the well
(9) Height-adjustable feet, front and back
(10) Water drain
(11) Nameplate in the well

1.2 Appliance range of use

Intended use

The appliance is only suitable for cooling food products in a domestic or household-like environment. This includes, for example, use:

The appliance is not suitable for freezing food;*

- in staff kitchens, bed and breakfast establishments,
- by guests in country houses, hotels, motels and other accommodation,
- for catering and similar services in the wholesale trade.

The appliance is suitable for integrating under counters.

All other types of use are not permitted.

Foreseeable misuse

The following applications are expressly forbidden:

- Storing and refrigerating medicines, blood plasma, laboratory preparations or similar substances and products based on the Medical Device Directive 2007/47/EC
- Use in areas at risk of explosions

Misusing the appliance may lead to damage to the goods stored or they may spoil.

Climate classifications

Depending on the climate classification the appliance is designed to operate in restricted ambient temperatures. The climate classification applying to your appliance is printed on the rating plate.

*** Depending on model and options**

Note

▶ Keep to the specified ambient temperatures in order to guarantee that the appliance works properly.

Climate classification	for ambient temperatures of
SN	10 °C to 32 °C
N	16 °C to 32 °C
ST	16 °C to 38 °C
T	16 °C to 43 °C

1.3 Conformity

The refrigerant circuit has been tested for leaks. In installed condition, this appliance complies with the applicable safety stipulations and with directives 2014/35/EU, 2014/30/EU, 2009/125/EG, 2011/65/EU and 2010/30/EU.

1.4 Product data

Product data is included with the appliance, as per Directive (EU) 2017/1369. The complete product data sheet is available on the Liebherr website under Downloads.

1.5 EPREL database

Details about energy labelling and ecodesign requirements will be available on the European product database (EPREL) from 1st March 2021. You can access the product database at the following link: https://eprel.ec.europa. eu/ You will be asked to enter the model ID. You can find the model ID on the nameplate.

1.6 Saving energy

- Pay attention to good ventilation. Do not cover ventilation holes or grids.
- Always keep the fan air slits clear.
- Do not install the appliance in direct sunlight, next to an oven, radiator or similar.
- Energy consumption is dependent on the installation conditions, e.g. ambient temperature (see 1.2 Appliance range of use) . If the ambient temperature deviates from the standard temperature of 25°C, the energy consumption may differ.
- Open the appliance for as short a time as possible.
- The lower the temperature is set the higher the energy consumption.
- Arrange the food in an organised way (see 1 Appliance at a glance) .
- Keep all food properly packed and covered. This prevents frost from forming.
- Only take food out for as long as necessary so that it doesn't warm up too much.
- Inserting warm food: allow to cool down to room temperature first.
- Thaw frozen food in the refrigerator.*
- If there is a thick layer of frost in the appliance: defrost the appliance.*

2 General safety information

Danger for the user:

- This device can be used by children and people with impaired physical, sensory or mental abilities or with a lack of experience and knowledge provided that they are supervised or have received instruction in the safe use of this device, and about the resulting hazards. Children must not play with this appliance. Cleaning and user maintenance work must not be carried out by children without adult supervision. Children aged between 3 and 8 are allowed to load and unload the appliance. Children below the age of 3 must be kept away from the appliance unless they are under continuous adult supervision.
- When disconnecting the appliance from the supply, always take hold of the plug. Do not pull the cable.
- In the event of a fault pull out the mains plug or deactivate the fuse.
- Do not damage the mains power cable. Do not operate the appliance with a defective mains power cable.
- Repairs, interventions on the appliance and the replacement of mains connection line may only be carried out by After-Sales Service or other suitably trained specialist personnel.
- Only install, connect and dispose of the appliance according to the instructions.
- Only use the appliance when it is installed.
- Please keep these instructions in a safe place and pass them on to any subsequent owners.

Fire hazard:

- The coolant used (information on the model plate) is eco-friendly but also flammable. Any leaking coolant may ignite.
  - Do not damage the refrigerant circuit pipes.
  - Do not handle ignition sources inside the appliance.
  - Do not use electrical appliances inside the appliance (e.g. steam cleaners, heaters, ice cream makers, etc.).
  - If the refrigerant leaks: remove any naked flames or ignition sources from the vicinity of the leakage point. Properly air the room. Inform customer services.
- Do not store explosives or sprays using combustible propellants such as butane, propane, pentane, etc. in the appliance. To identify these spray cans, look for the list of contents printed on the can, or a flame symbol. Gases possibly escaping may ignite due to electrical components.
- Please be sure to store alcoholic drinks or other packaging containing alcohol in tightly closed containers. Any alcohol that leaks out may be ignited by electrical components.

EN

Danger of tipping and falling:

- Do not misuse the plinth, drawers, doors etc. as a step or for support. This applies particularly to children.

Danger of food poisoning:

- Do not consume food which has been stored too long.

Danger of frostbite, numbness and pain:

- Avoid prolonged skin contact with cold surfaces or refrigerated/frozen goods or take protective measures, e.g wear use gloves.

Danger of injury and damage:

- Hot steam can lead to injury. Do not use electrical heating or steam cleaning equipment, open flames or defrosting sprays to defrost.
- Do not use sharp implements to remove the ice.

Danger of crushing:

- Do not hold the hinge when opening and closing the door. Fingers may get caught.

Symbols on the appliance:



The symbol can be located on the compressor. It refers to the oil in the compressor and indicates the following danger: Swallowing or inhaling can be fatal. This is only relevant for recycling. There is no danger in normal operation.



This symbol is found on the compressor and indicates the danger of flammable materials. Do not remove the sticker.



A sticker to this effect may be applied to the rear of the appliance. It refers to the foam-padded panels in the door and/or the housing. This is only relevant for recycling. Do not remove the sticker.

Please observe the specific information in the other sections:

⚠	DANGER	identifies a situation involving direct danger which, if not obviated, may result in death or severe bodily injury.
⚠	WARNING	identifies a dangerous situation which, if not obviated, may result in death or severe bodily injury.
⚠	CAUTION	identifies a dangerous situation which, if not obviated, may result in minor or medium bodily injury.
	NOTICE	identifies a dangerous situation which, if not obviated, may result in damage to property.
	Note	It contains useful instructions and tips.

3 Controls and displays

3.1 Operating and control elements

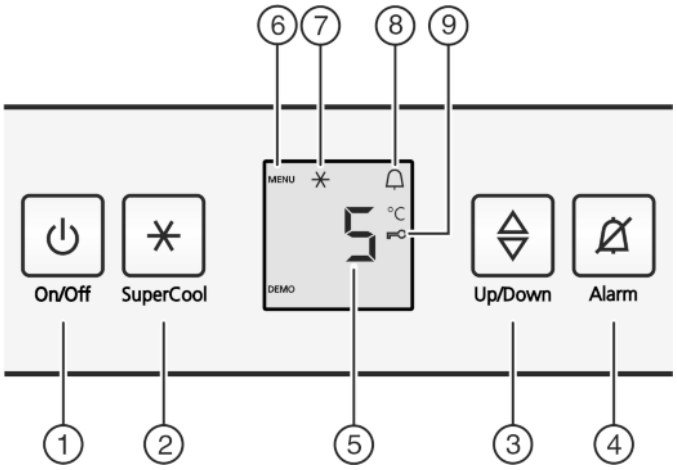

Fig. 2

(1) On/Off button
(2) SuperCool button
(3) Setting button
(4) Alarm button
(5) Temperature display
(6) Menu symbol
(7) SuperCool symbol
(8) Alarm symbol
(9) Child lock symbol

3.2 Temperature display

During normal operation, the display shows:

- the chiller temperature setting

The temperature display flashes if/when:

- You change the temperature setting

The following displays indicate a fault. Possible causes and solutions: (see 7 Malfunctions) .

- F0 to F9

4 Putting into operation

4.1 Switching on the appliance

▶ Open the door.
▶ Press the On/Off button *Fig. 2 (1)*.
▷ The temperature display lights up. The appliance is switched on.
▷ If “DEMO” is displayed, demo mode is activated. Please contact the after sales service.

5 Control

5.1 Child proofing

The child-proofing function enables you to make sure that the appliance is not inadvertently switched off by playing children.

5.1.1 Setting the child lock

To activate the setting mode:
▶ Press the SuperCool button *Fig. 2 (2)* for about 5 seconds.
▷ The Menu symbol is shown on the display, *Fig. 2 (6)*.
▷ c flashes on the display.

To switch on the function:

▶ Confirm briefly with the SuperCool button *Fig. 2 (2)*.



▷ **c1** appears on the display.
▶ Confirm briefly with the SuperCool button *Fig. 2 (2)*.
▷ The child lock symbol, *Fig. 2 (9)*, lights up on the display.
▷ **c** flashes on the display.
▷ The child lock function is switched on.

If the function is to be switched off:

▶ Confirm briefly with the SuperCool button *Fig. 2 (2)*.



▷ **c0** appears on the display.
▶ Confirm briefly with the SuperCool button *Fig. 2 (2)*.
▷ **c** flashes in the display.
▷ The child lock function is switched off.

To end the setting mode:

▶ Briefly press the On/Off button *Fig. 2 (1)*.
▷ The temperature display shows the temperature again.

5.2 Door alarm

For the fridge compartment
An audible warning sounds if the door is open for longer than 60 seconds.



The audible warning stops automatically when the door is closed.

5.2.1 Muting the door alarm

The audible alarm can be muted when the door is open. The sound switch-off function is active as long as the door is left open.

▶ Press alarm button *Fig. 2 (4)*.
▷ The door alarm is silenced.

5.3 Refrigerator compartment

The natural circulation of air in the refrigerator compartment results in zones differing in temperature. It is coldest directly above the vegetable drawers and at the rear wall. It is warmest at the top front of the compartment and in the door.

5.3.1 Refrigerating food

The coldest areas are directly above the vegetable compartments and along the back wall. The warmest area is at the top front and in the door.*

▶ Store perishable foods such as ready-to-eat meals, meat and sausages in the coldest area. Place butter and preserves in the top area and in the door. (see 1 Appliance at a glance)
▶ Use reuseable plastic, metal, aluminium, glass containers and foil wrap to store food.
▶ Always store raw meat and fish in clean, sealed containers on the bottom shelf of the refrigerator, to prevent them coming into contact with or dripping onto other foods.
▶ Foods that easily absorb or give off smell or taste, as well as liquids, should be stored in sealed containers or covered.
▶ Do not pack foods too closely together, as the air needs to circulate.

5.3.2 Setting the temperature

The temperature depends on the following factors:

- the frequency of opening the door
- how long the door is open for
- the room temperature of the installation location
- the type, temperature and quantity of the food

Recommended temperature setting: 5 °C *

An average temperature of approx. -18 °C is then established in the freezer compartment.*

The temperature is changed sequentially. Once the 2 °C setting is reached, the sequence starts again at 9 °C.



▶ Call up temperature function: press the setting button *Fig. 2 (3)*.
▷ The previously-set value will flash in the temperature display.
▶ Change the temperature in 1 °C steps: Press the setting button *Fig. 2 (3)* until the required temperature is indicated in the temperature display.
▶ Change temperature continually: hold down setting button.
▷ During adjustment the value flashes on the display.
▷ The new setting is adopted approx. 5 seconds after the last time the button was pressed and the set temperature displayed again. The temperature in the interior gradually adjusts to the new value.

5.3.3 SuperCool



SuperCool is for maximum cooling. This option is for very low temperatures:

- In the fridge compartment
- In the freezer compartment*

Use SuperCool to quickly cool large amounts of food.

To freeze food, activate SuperCool when you place the goods in the appliance.*

When SuperCool is activated, the fan* may run. The appliance operates with maximum cooling performance, which means that the noise of the refrigeration unit may be temporarily louder.

The SuperCool function uses slightly more energy.

Switching onSuperCool

▶ Briefly press SuperCool button *Fig. 2 (2)*.
▷ The SuperCool *Fig. 2 (7)* symbol lights up in the display.
▷ The cooling temperature drops to the lowest setting.
▷ SuperCool is on.
▷ SuperCool turns off automatically. The appliance continues in energy-saving Normal mode.

To prematurely deactivate SuperCool

▶ Briefly press SuperCool button *Fig. 2 (2)*.
▷ The SuperCool symbol *Fig. 2 (7)* goes out in the display.
▷ SuperCool is deactivated.

5.3.4 Shelves

Moving or removing shelves

The shelves are prevented from being pulled out accidentally by pull out stops.

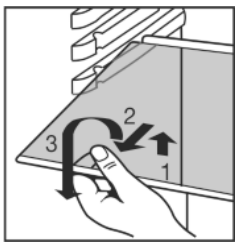

Fig. 3

▶ Lift the shelf and pull it out towards the front.
▶ Insert shelf with the raised edge pointing upwards at the back.

EN

▷ The food does not freeze onto the rear wall.

Dismantling shelves

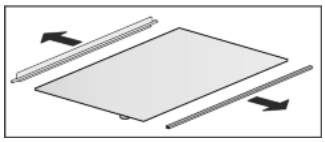

▶ The shelves can be dismantled for cleaning.

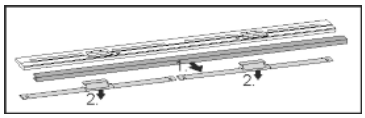

5.3.5 Door racks

Removing the storage rack

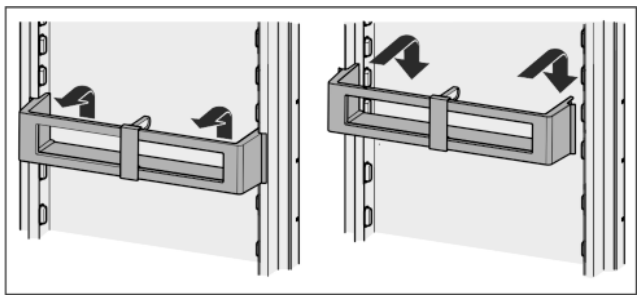

Fig. 4

Dismantling door racks

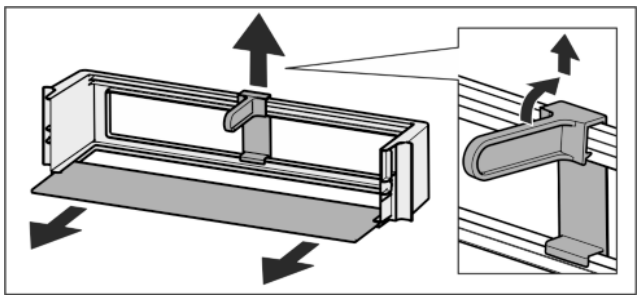

Fig. 5

▶ The door racks can be dismantled for cleaning.

5.3.6 Using the bottle holder

▶ To avoid the bottles tipping over, push the bottle holder along.

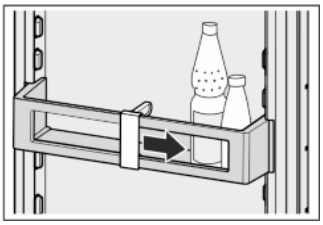

5.3.7 Egg tray

You can take out and rotate the egg tray. You can use the two parts of the egg tray to mark different use-by dates, for example.

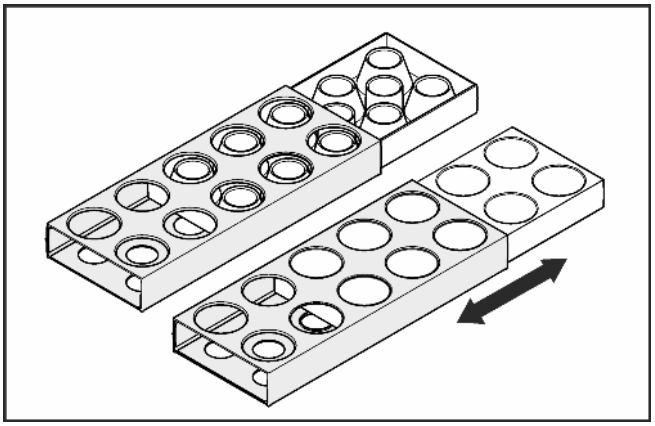

▶ Use the top part to store e.g. chicken eggs.
▶ Use the bottom part to store quails' eggs.

5.4 Freezer compartment*

You can store frozen food for several months, make ice cubes and freeze fresh food in the freezer compartment at a temperature of -18 °C and lower.

The air temperature in the compartment, measured by thermometer or other instruments, may fluctuate.

5.4.1 Opening the freezer compartment

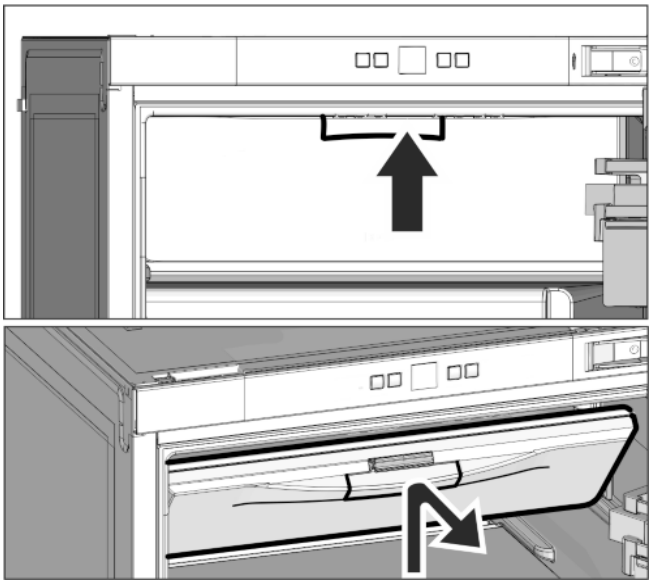

Fig. 6

To open the freezer compartment, push the handle up and pull the freezer door towards you.

When closing the freezer, push on the handle to make sure the lock clicks into place.

5.4.2 Freezing food

The rating plate indicates the maximum quantity of fresh food you can freeze within 24 hours (see 1 Appliance at a glance) under “Freezing capacity ... kg/24h”.

CAUTION
Risk of injury due to broken glass!
Bottles and cans containing drinks may burst when being frozen. This applies particularly to sparkling drinks.
▶ Do not freeze bottles and cans containing drinks!

▶ Switch on SuperCool 4 hours before freezing and set the temperature to 4 °C or less.

▶ Once the food is frozen, you can reset the temperature and switch off SuperCool.

So that the food is rapidly frozen through to the core, do not exceed the following quantities per pack

- Fruit, vegetables up to 1 kg
- Meat up to 2.5 kg

▶ Pack the food in portions in freezer bags, reusable plastic, metal or aluminium containers

5.4.3 Storage times

Guide times for storing various types of food in the freezer compartment:	
Ice cream	2 to 6 months
Sausage, ham	2 to 6 months
Bread, bakery products	2 to 6 months
Game, pork	6 to 10 months
Fish, fatty	2 to 6 months
Fish, lean	6 to 12 months
Cheese	2 to 6 months
Poultry, beef	6 to 12 months
Vegetables, fruit	6 to 12 months

Storage times given are guide times.

5.4.4 Thawing food

- in the refrigerator compartment
- in a microwave oven
- in a conventional or fan oven
- at room temperature

▶ Remove only as much food as is required. Use thawed food as quickly as possible.

▶ Food once thawed should be re-frozen only in exceptional cases.

6 Maintenance

6.1 Defrosting

6.1.1 Defrosting refrigerator compartment

The refrigerator compartment is defrosted automatically. The water evaporates. Drops of water on the rear wall are functionally conditioned and perfectly normal.

▶ Clean the drain hole at regular intervals to allow the defrost water to drain (see 6.2 Cleaning the appliance) .

6.1.2 Defrosting freezer compartment*

A layer of frost and ice forms in the freezer compartment after the appliance has been in use for a lengthy period of time. This is quite normal. The layer of frost and ice forms more quickly if the door is opened frequently or if the food is warm when placed inside. However, a thick layer of ice will increase the appliance‘s energy consumption. You should therefore defrost the appliance regularly.

WARNING

Danger of injury and damage

▶ Do not use any mechanical aids or other means not recommended by the manufacturer in order to accelerate the defrosting process.

▶ Do not use electrical heating or steam cleaning equipment, open flames or defrosting sprays to defrost.

▶ Do not use sharp implements to remove the ice.

▶ Do not damage the pipework in the refrigerant circuit.

▶ Switch off the appliance.

▷ The temperature display goes out.

▷ If the temperature display does not go out, the child-proofing function (see 5.1 Child proofing) is active.

▶ Pull out the plug.

▶ Wrap the frozen food in newspaper or blankets and store in a cool place.

▶ Leave the compartment and appliance door open during defrosting.

▶ Remove detached pieces of ice.

▶ Pay attention that the defrost water does not run into the kitchen unit.

▶ If necessary, pick up defrost water several times, using a sponge or cloth.

▶ Clean the compartment (see 6.2 Cleaning the appliance) .

6.2 Cleaning the appliance

Clean the appliance regularly.

WARNING

Risk of injury and damage as a result of hot steam!

Hot steam can lead to burns and can damage the surfaces.

▶ Do not use any steam cleaners!

NOTICE

Incorrect cleaning damages the appliance!

▶ Do not use cleaning agents in concentrated form.

▶ Do not use any scouring or abrasive sponges or steel wool.

▶ Do not use any sharp or abrasive cleaning agents, nor any that contain sand, chloride or acid.

▶ Do not use chemical solvents.

▶ Do not damage or remove the type plate on the inside of the appliance. It is important for the customer service.

▶ Do not pull off, bend or damage cables or other components.

▶ Do not allow any cleaning water to enter the drain channel, ventilation grille or electrical parts.

▶ Please use soft cleaning cloths and a universal pH-neutral cleaning agent.

▶ Please use cleaning and care products suitable for contact with foodstuffs in the appliance interior.

▶ **Empty appliance.**

▶ **Pull out the power plug.**



▶ Clean the **vent grille** regularly.

▷ Dust deposits increase energy consumption.

▶ Clean **plastic outer and inner surfaces** with lukewarm water and a little washing-up liquid.

▶ Clean **drain hole**: Remove deposits with a narrow instrument, e.g. a cotton bud.

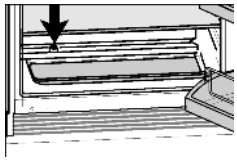

▶ Most of the **parts** can be dismantled for cleaning: see the relevant chapter.

EN

- ▶ **Clean drawers** by hand with lukewarm water and a little washing up liquid.
- ▶ All the **other fittings** can be put in the dishwasher.

After cleaning:

- ▶ Wipe dry the appliance and items of equipment.
- ▶ Connect the appliance and switch it on again. When the temperature is sufficiently cold:
- ▶ Put the food back inside.

6.3 Customer service

First check whether you can correct the fault yourself by reference to the list (see 7 Malfunctions) . If this is not the case, please contact the customer service whose address is given in the enclosed customer service list.

WARNING

Risk of injury if repair work is not carried out professionally!

- ▶ Have any repairs and action - not expressly specified - on the appliance and mains cable carried out by service personnel only. (see 6 Maintenance)

- ▶ Read the appliance designation *Fig. 7 (1)*, service No. *Fig. 7 (2)* and serial No. *Fig. 7 (3)* off the type plate located inside the appliance on the left-hand side.

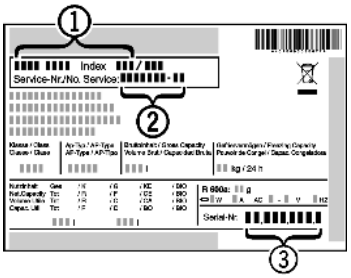

Fig. 7

- ▶ Notify the customer service, specifying the fault, appliance designation *Fig. 7 (1)*, service No. *Fig. 7 (2)* and serial No. *Fig. 7 (3)*.
- ▷ This will help us to provide you with a faster and more accurate service.
- ▶ Keep the appliance closed until the customer service arrives.
- ▷ The food will stay cool longer.
- ▶ Pull out the mains plug (not by pulling the connecting cable) or switch off the fuse.

7 Malfunctions

Your appliance is designed and manufactured for a long life span and reliable operation. If a malfunction nonetheless occurs during operation, check whether it is due to a handling error. In this case you will have to be charged for the costs incurred, even during the warranty period. You may be able to rectify the following faults yourself:

Appliance does not work.

- → The appliance is not switched on.
- ▶ Switch on the appliance.
- → The power plug is not properly inserted in the wall socket.
- ▶ Check power plug.
- → The fuse of the wall socket is not in order.
- ▶ Check fuse.

The compressor runs for a long time.

- → The compressor switches to a low speed when little cold is needed. Although the running time is increased as a result, energy is saved.
- ▶ This is normal in energy-saving models.
- → SuperCool is activated.
- ▶ The compressor runs for longer in order to rapidly cool the food. This is normal.

A LED on the bottom rear of the appliance (at the compressor) flashes repeatedly every 5 seconds*.

- → There is a fault.
- ▶ Please contact the after-sales service (see 6 Maintenance) .

Excessive noise.

- → Due to the various speed steps, speed-regulated* compressors can generate different running noises.
- ▶ The sound is normal.

A bubbling and gurgling noise.

- → This noise comes from the refrigerant flowing in the refrigeration circuit.
- ▶ The sound is normal.

A quiet clicking noise.

- → The noise is produced whenever the refrigeration unit (motor) automatically switches on or off.
- ▶ The sound is normal.

A hum. It is briefly a little louder when the refrigeration unit (the motor) switches on.

- → The refrigeration increases automatically when the SuperCool function is activated, fresh food has just been placed in the appliance or the door has been left open for a while.
- ▶ The sound is normal.
- → The ambient temperature is too high.
- ▶ Solution: (see 1.2 Appliance range of use)

A low hum.

- → The sound is produced by air flow noise of the fan.
- ▶ The sound is normal.

Vibration noises

- → The appliance is not standing firmly on the floor. As a result objects and adjacent units start to vibrate when the refrigerator is running.
- ▶ Check the installation and realign the appliance.
- ▶ Keep bottles and jars apart.

Flow sound at the soft stop mechanism.

- → The noise is produced when the door is opened and closed.
- ▶ The sound is normal.

The temperature display indicates: F0 to F9

- → There is a fault.
- ▶ Please contact the after-sales service (see 6 Maintenance) .

DEMO shines in the temperature display.

- → The demo mode is activated.
- ▶ Please contact the after-sales service (see 6 Maintenance) .

The outer surfaces of the appliance are warm*.

- → The heat of the refrigeration circuit is used to prevent condensate from forming.
- ▶ This is normal.

The temperature is not cold enough.

- → The door of the appliance is not properly closed.
- ▶ Close the door of the appliance.
- → Insufficient ventilation.
- ▶ Keep ventilation grille clear, and clean it.
- → The ambient temperature is too high.
- ▶ Solution: (see 1.2 Appliance range of use) .
- → The appliance was opened too frequently or for too long.
- ▶ Wait to see whether the appliance reaches the required temperature by itself. If not, please contact the after sales service (see 6 Maintenance) .
- → The temperature is incorrectly set.
- ▶ Set the temperature to a colder setting and check after 24 hours.

→ The appliance is too close to a source of heat (stove, heater etc).
▶ Change the position of the appliance or the source of heat.
→ The appliance was not inserted properly into the recess.
▶ Check whether the appliance was inserted correctly and the door closes properly.

The internal light does not come on.*
→ The appliance is not switched on.
▶ Switch the appliance on.
→ The door was open for longer than 15 minutes.
▶ The internal light switches itself off automatically after about 15 minutes if the door is open.
→ The LED illumination is faulty or the cover is damaged:

WARNING
Risk of injury due to electric shock!
There are live electrical parts under the cover.
▶ Only ever have the inside LED light replaced or repaired by customer service or trained personnel.

WARNING
Risk of injury from LED bulb!
The light intensity of the LED light corresponds to hazard group RG 2.
If the cover is defective:
▶ Do not look directly into the light from close range. It cause injury to the eyes.

The door seal is defective or needs to be replaced for another reason.
→ The door seal can be replaced. It can be replaced without the need for special tools.
▶ Contact Customer Service (see 6 Maintenance) :

The unit has iced up or condensation has formed.
→ The door seal may have also slipped out of its groove.
▶ Check to ensure that the door seal is seated properly in the groove.

8 Decommissioning

8.1 Switching off the appliance

▶ Press the On/Off button *Fig. 2 (1)* until the display goes dark. Release button.
▷ If the appliance cannot be switched off, the child lock function is active (see 5.1 Child proofing) .

8.2 Taking the appliance out of service

▶ Empty the appliance.
▶ Switch off the appliance (see 8 Decommissioning) .
▶ Remove mains connector.
▶ Clean the appliance (see 6.2 Cleaning the appliance) .



▶ Leave the door open to prevent odour.

9 Disposing of the appliance

The appliance contains some reusable materials and should be disposed of properly - not simply with unsorted household refuse. Appliances which are no longer needed must be disposed of in a professional and appropriate way, in accordance with the current local regulations and laws.



When disposing of the appliance, ensure that the refrigeration circuit is not damaged to prevent uncontrolled escape of the refrigerant it contains (data on type plate) and oil.
▶ Disable the appliance.
▶ Pull out the plug.
▶ Cut through the connecting cable.

EN

Liebherr-Hausgeräte Ochsenhausen GmbH
Memminger Straße 77-79
88416 Ochsenhausen
Deutschland

home.liebherr.com