SCE81925TS

EN **User Manual**
Fridge Freezer

USER MANUAL

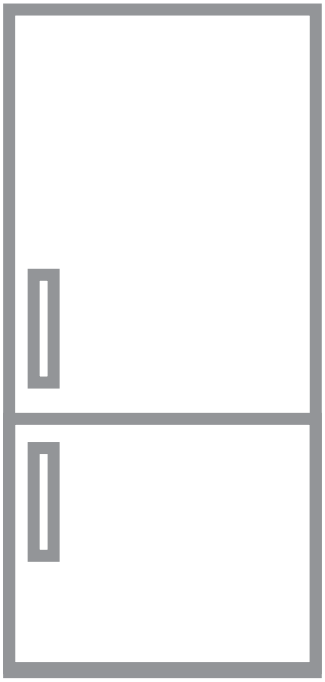

AEG

CONTENTS

1. SAFETY INFORMATION....2
2. SAFETY INSTRUCTIONS....4
3. INSTALLATION....6
4. OPERATION....8
5. DAILY USE....11
6. HINTS AND TIPS....12
7. CARE AND CLEANING....14
8. TROUBLESHOOTING....15
9. NOISES....18
10. TECHNICAL DATA....19

FOR PERFECT RESULTS

Thank you for choosing this AEG product. We have created it to give you impeccable performance for many years, with innovative technologies that help make life simpler – features you might not find on ordinary appliances. Please spend a few minutes reading to get the very best from it.
Visit our website for:



Get usage advice, brochures, trouble shooter, service and repair information:
www.aeg.com/support



Register your product for better service:
www.registeraeg.com



Buy Accessories, Consumables and Original spare parts for your appliance:
www.aeg.com/shop

CUSTOMER CARE AND SERVICE

Always use original spare parts.
When contacting our Authorised Service Centre, ensure that you have the following data available: Model, PNC, Serial Number.
The information can be found on the rating plate.

⚠ Warning / Caution-Safety information

ⓘ General information and tips

Environmental information

Subject to change without notice.

1. ⚠ SAFETY INFORMATION

Before the installation and use of the appliance, carefully read the supplied instructions. The manufacturer is not responsible for any injuries or damage that are the result of incorrect installation or

usage. Always keep the instructions in a safe and accessible location for future reference.

1.1 Children and vulnerable people safety

- This appliance can be used by children aged from 8 years and above and persons with reduced physical, sensory or mental capabilities or lack of experience and knowledge if they have been given supervision or instruction concerning the use of the appliance in a safe way and understand the hazards involved.
- Children aged from 3 to 8 years are allowed to load and unload the appliance provided that they have been properly instructed.
- This appliance may be used by persons with very extensive and complex disabilities provided that they have been properly instructed.
- Children of less than 3 years of age should be kept away from the appliance unless continuously supervised.
- Do not let children play with the appliance.
- Children shall not carry out cleaning and user maintenance of the appliance without supervision.
- Keep all packaging away from children and dispose of it appropriately.

1.2 General Safety

- This appliance is intended to be used in household and similar applications such as:
  - Farm houses; staff kitchen areas in shops, offices and other working environments;
  - By clients in hotels, motels, bed and breakfast and other residential type environments.
- To avoid contamination of food respect the following instructions:
  - do not open the door for long periods;
  - clean regularly surfaces that can come in contact with food and accessible drainage systems;

  - store raw meat and fish in suitable containers in the refrigerator, so that it is not in contact with or drip onto other food.
- WARNING: Keep ventilation openings, in the appliance enclosure or in the built-in structure, clear of obstruction.
- WARNING: Do not use mechanical devices or other means to accelerate the defrosting process, other than those recommended by the manufacturer.
- WARNING: Do not damage the refrigerant circuit.
- WARNING: Do not use electrical appliances inside the food storage compartments of the appliance, unless they are of the type recommended by the manufacturer.
- Do not use water spray and steam to clean the appliance.
- Clean the appliance with a moist soft cloth. Only use neutral detergents. Do not use abrasive products, abrasive cleaning pads, solvents or metal objects.
- When the appliance is empty for long period, switch it off, defrost, clean, dry and leave the door open to prevent mould from developing within the appliance.
- Do not store explosive substances such as aerosol cans with a flammable propellant in this appliance.
- If the supply cord is damaged, it must be replaced by the manufacturer, its Authorised Service Centre or similarly qualified persons in order to avoid a hazard.

2. SAFETY INSTRUCTIONS

2.1 Installation



WARNING!
Only a qualified person must install this appliance.

- Remove all the packaging.
- Do not install or use a damaged appliance.
- Do not use the appliance before installing it in the built-in structure due to safety manner.
- Follow the installation instructions supplied with the appliance.
- Always take care when moving the appliance as it is heavy. Always use safety gloves and enclosed footwear.
- Make sure the air can circulate around the appliance.
- At first installation or after reversing the door wait at least 4 hours before connecting the appliance to the power supply. This is to allow the oil to flow back in the compressor.

- Before carrying out any operations on the appliance (e.g. reversing the door), remove the plug from the power socket.
- Do not install the appliance close to radiators or cookers, ovens or hobs.
- Do not expose the appliance to the rain.
- Do not install the appliance where there is direct sunlight.
- Do not install this appliance in areas that are too humid or too cold.
- When you move the appliance, lift it by the front edge to avoid scratching the floor.
- The appliance contains a bag of desiccant. This is not a toy. This is not food. Please dispose of it immediately.

2.2 Electrical connection



WARNING!
Risk of fire and electric shock.



WARNING!
When positioning the appliance, ensure the supply cord is not trapped or damaged.



WARNING!
Do not use multi-plug adapters and extension cables.

- The appliance must be earthed.
- Make sure that the parameters on the rating plate are compatible with the electrical ratings of the mains power supply.
- Always use a correctly installed shockproof socket.
- Make sure not to cause damage to the electrical components (e.g. mains plug, mains cable, compressor). Contact the Authorised Service Centre or an electrician to change the electrical components.
- The mains cable must stay below the level of the mains plug.
- Connect the mains plug to the mains socket only at the end of the installation. Make sure that there is access to the mains plug after the installation.
- Do not pull the mains cable to disconnect the appliance. Always pull the mains plug.

2.3 Use



WARNING!
Risk of injury, burns, electric shock or fire.



The appliance contains flammable gas, isobutane (R600a), a natural gas with a high level of environmental compatibility. Be careful not to cause damage to the refrigerant circuit containing isobutane.

- Do not change the specification of this appliance.
- Do not put electrical appliances (e.g. ice cream makers) in the appliance unless they are stated applicable by the manufacturer.
- If damage occurs to the refrigerant circuit, make sure that there are no flames and sources of ignition in the room. Ventilate the room.
- Do not let hot items to touch the plastic parts of the appliance.
- Do not put soft drinks in the freezer compartment. This will create pressure on the drink container.
- Do not store flammable gas and liquid in the appliance.
- Do not put flammable products or items that are wet with flammable products in, near or on the appliance.
- Do not touch the compressor or the condenser. They are hot.
- Do not remove or touch items from the freezer compartment if your hands are wet or damp.
- Do not freeze again food that has been thawed.
- Follow the storage instructions on the packaging of frozen food.
- Wrap the food in any food contact material before putting it in the freezer compartment.

2.4 Internal lighting

WARNING!
Risk of electric shock.

- The type of lamp used for this appliance is for household appliances only. Do not use it for house lighting.

2.5 Care and cleaning

WARNING!
Risk of injury or damage to the appliance.

- Before maintenance, deactivate the appliance and disconnect the mains plug from the mains socket.
- This appliance contains hydrocarbons in the cooling unit. Only a qualified person must do the maintenance and the recharging of the unit.
- Regularly examine the drain of the appliance and if necessary, clean it. If the drain is blocked, defrosted water collects in the bottom of the appliance.

2.6 Service

- To repair the appliance contact the Authorised Service Centre. Use original spare parts only.
- Please note that self-repair or non-professional repair can have safety consequences and might void the guarantee.

2.7 Disposal

WARNING!
Risk of injury or suffocation.

- Disconnect the appliance from the mains supply.
- Cut off the mains cable and discard it.
- Remove the door to prevent children and pets to be closed inside of the appliance.
- The refrigerant circuit and the insulation materials of this appliance are ozone-friendly.
- The insulation foam contains flammable gas. Contact your municipal authority for information on how to discard the appliance correctly.
- Do not cause damage to the part of the cooling unit that is near the heat exchanger.

3. INSTALLATION

WARNING!
Refer to Safety chapters.

WARNING!
Refer to installation instruction document to install your appliance.

WARNING!
Fix the appliance in accordance with installation instruction document to avoid a risk of instability of the appliance.

3.1 Location

To ensure best performance, install the appliance well away from sources of heat such as radiators, boilers, direct sunlight etc. Make sure that air can circulate freely around the back of the cabinet.

3.2 Positioning

Install the appliance in a dry, well ventilated indoors where the ambient temperature corresponds to the climate class indicated on the rating plate of the appliance.

Climate class	Ambient temperature
SN	+10°C to + 32°C
N	+16°C to + 32°C
ST	+16°C to + 38°C

Climate class	Ambient temperature
T	+16°C to + 43°C

Some functional problems might occur for some types of models when operating outside of that range. The correct operation can only be guaranteed within the specified temperature range. If you have any doubts regarding where to install the appliance, please turn to the vendor, to our customer service or to the nearest Authorised Service Centre.

3.3 Electrical Connection

CAUTION!
Any electrical work required to install this appliance should be carried out by a qualified electrician or competent person.

WARNING!
This appliance must be earthed.
The manufacturer declines any liability should these safety measures not be observed.

The wires in the mains lead are coloured in accordance with the following code:

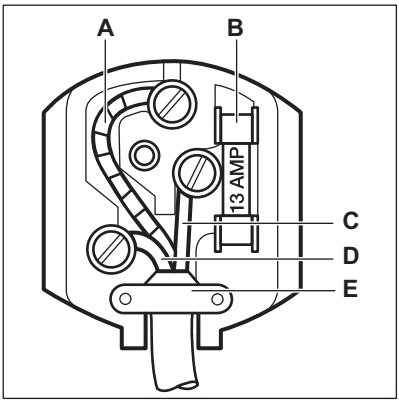

- **A** - green and yellow: Earth
- **C** - brown: Live
- **D** - blue: Neutral

As the colours of the wires in the mains lead of this appliance may not correspond with the coloured markings identifying the terminals in your plug, proceed as follows:

1. Connect the wire coloured green and yellow to the terminal marked either with the letter "E" or by the earth symbol ⏚ or coloured green and yellow.
2. Connect the wire coloured blue to the terminal either marked with the letter "N" or coloured black.
3. Connect the wire coloured brown to the terminal either marked with the "L" or coloured red.
4. Check that no cut, or stray strands of wire is present and the cord clamp (**E**) is secure over the outer sheath. Make sure the electricity supply voltage is the same as that indicated on the appliance rating plate.
5. Switch on the appliance.

The appliance is supplied with a 13 amp fuse (**B**). In the event of having to change the fuse in the plug supplied, a 13 amp ASTA approved (BS 1362) fuse must be used.

WARNING!
A cut off plug inserted into a 13 amp socket is a serious safety (shock) hazard. Ensure that it is disposed of safely.

3.4 Ventilation requirements

The airflow behind the appliance must be sufficient.

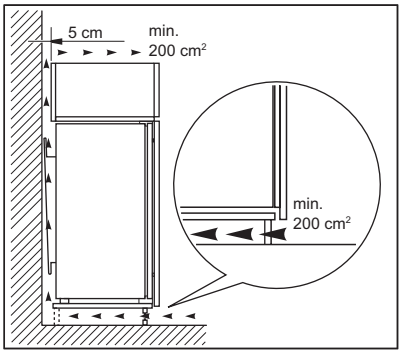

CAUTION!
Refer to the assembly instructions for the installation.

4. OPERATION

4.1 Control Panel

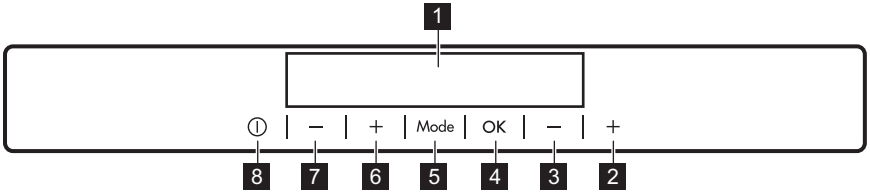

1 Display
2 Freezer Temperature warmer button
3 Freezer Temperature colder button
4 OK
5 Mode
6 Fridge Temperature warmer button
7 Fridge Temperature colder button
8 ON/OFF

It is possible to change predefined sound of buttons by pressing together Mode and temperature colder button for a few seconds. Change is reversible.

4.2 Display

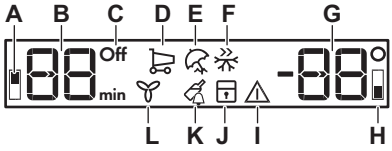

A. Fridge compartment indicator
B. Timer indicator /Temperature indicator
C. ON/OFF indicator
D. Coolmatic function
E. Holiday mode
F. Frostmatic function
G. Temperature indicator
H. Freezer compartment indicator
I. Alarm indicator
J. ChildLock function

K. DrinksChill function

L. DYNAMICAIR function

4.3 Switching on

1. Connect the mains plug to the power socket.
2. Press the appliance ON/OFF if the display is off. The temperature indicators show the set default temperature.

The alarm buzzer could operate after few seconds. To reset the alarm refer to "High temperature alarm".

To select a different set temperature refer to "Temperature regulation".

If "dEMo" appears on the display, refer to "Troubleshooting" .

4.4 Switching off

1. Press the appliance ON/OFF for 5 seconds.

The display switches off.

2. Disconnect the mains plug from the power socket.

4.5 Temperature regulation

Set the temperature of the appliance by pressing the temperature regulators.
Default set temperature:

- +5°C for the fridge
- -18°C for the freezer

The temperature indicators show the set temperature.

The set temperature will be reached within 24 hours. After a power failure the set temperature remains stored.

4.6 Switching on the fridge

To switch on the fridge it is enough to press the fridge temperature regulator.
To switch on the fridge in the other way:

1. Press Mode until the corresponding icon appears.

The Fridge OFF indicator flashes.

2. Press OK to confirm.

The fridge OFF indicator goes off.

To select a different set temperature refer to "Temperature regulation".

4.7 Switching off the fridge

1. Press Mode until the corresponding icon appears.

The fridge OFF indicator and the fridge compartment indicator flash.
The fridge temperature indicator shows dashes.

2. Press OK to confirm.

The fridge OFF indicator is shown.

4.8 Coolmatic function

If you need to insert a large amount of warm food, for example after doing the grocery shopping, we suggest activating the Coolmatic function to chill the products more rapidly and to avoid warming the other food which is already in the refrigerator.

1. Press the Mode until the corresponding icon appears.

The Coolmatic indicator flashes.

2. Press the OK to confirm.

The Coolmatic indicator is shown.
The Coolmatic function shuts off automatically after approximately 6 hours.

To switch off the function before its automatic end, repeat the procedure.

The function switches off by selecting a different fridge set temperature.

4.9 Holiday mode

This mode allows you to keep the appliance closed and empty during a long holiday period without the formation of bad odours.

1. Press the Mode until the corresponding icon appears.

The Holiday indicator flashes. The temperature indicator shows the set temperature.

2. Press the OK to confirm.

The Holiday indicator is shown.

This mode switches off after selecting a different temperature.

4.10 Frostmatic function

The Frostmatic function accelerates the freezing of fresh food and, at the same time, protects foodstuffs already stored from undesirable warming.

1. To activate this function press the Mode button until the corresponding icon appears.

The Frostmatic indicator flashes.

2. Press the OK button to confirm.

The Frostmatic indicator is shown.
This function stops automatically after 52 hours.

To switch off the function before its automatic end repeat the procedure until the Frostmatic indicator turns off.

The function switches off by selecting a different set temperature.

4.11 ChildLock function

Activate the ChildLock function to lock the buttons from unintentional operation.

1. Press Mode until the corresponding icon appears.

The ChildLock indicator flashes.

2. Press OK to confirm.

The ChildLock indicator is shown.
To deactivate the ChildLock function, repeat the procedure until the ChildLock indicator goes off.

4.12 DrinksChill function

The DrinksChill function is to be used to set an acoustic alarm at the preferred time, useful for example when a recipe requires to cool down food products for a certain period of time.

It is also useful when a reminder is needed in order not to forget the bottles placed in the freezer for fast cooling.

1. Press Mode until the corresponding icon appears.

The DrinksChill indicator flashes.
The Timer shows the set value (30 minutes) for a few seconds.

2. Press the Timer regulator to change the Timer set value from 1 to 90 minutes.
3. Press OK to confirm.

TheDrinksChill indicator is shown.
The Timer start to flash (min).
At the end of the countdown the DrinksChill indicator flashes and an audible alarm sounds. Press OK to switch off the sound and terminate the function.

To switch off the function repeat the procedure until the DrinksChill goes off.

It is possible to change the time at any time during the countdown and at the end by pressing the Temperature colder button and the Temperature warmer button.

4.13 High temperature alarm

An increase in the temperature in the freezer compartment (for example due to an earlier power failure) is indicated by flashing the alarm icon and freezer temperature indicators, and sounding of buzzer.

Press any button.
The buzzer switches off.
The freezer temperature indicator shows the highest temperature reached for a few seconds, then displays the set temperature again.

The alarm indicator continues to flash until the normal conditions are restored.

4.14 Door open alarm

If the refrigerator door is left open for approximately 5 minutes, the sound is on and alarm indicator flashes.

The alarm stops after closing the door. During the alarm, the sound can be muted by pressing any button.

4.15 DYNAMICAIR function

To switch on the function:

1. Press the Mode button until the corresponding icon appears. The DYNAMICAIR indicator flashes.
2. Press the OK button to confirm. The DYNAMICAIR indicator is shown.

To switch off the function repeat the procedure until the DYNAMICAIR indicator icon goes off.

If the function is activated automatically the DYNAMICAIR indicator is not shown (refer to "Daily use").
The activation of the DYNAMICAIR function increase the energy consumption.

5. DAILY USE

WARNING!
Refer to Safety chapters.

5.1 Cleaning the interior

Before using the appliance for the first time, the interior and all internal accessories should be washed with lukewarm water and some neutral soap to remove the typical smell of a brand-new product, then dried thoroughly.

CAUTION!
Do not use detergents, abrasive powders, chlorine or oil-based cleaners as they will damage the finish.

5.2 Positioning of the door shelves

The door of the fridge compartment is equipped with runners which enable repositioning of the door shelves according to individual preferences.

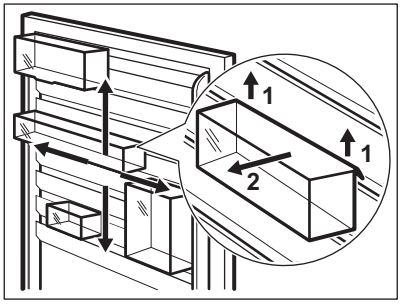

To reposition the door shelves, please slide the door shelves carefully according to arrows.

5.3 Movable shelves

The walls of the refrigerator are equipped with a series of runners so that the shelves can be positioned as desired.

This appliance is also equipped with a shelf consisting of two parts. The front half of the shelf can be placed under the second half to make better use of space.

To fold the shelf:

1. Take out the front half gently.
2. Slide it into the lower rail and under the second half.

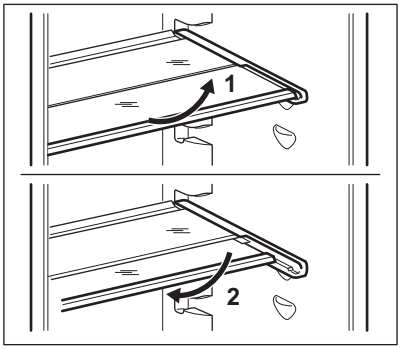

Do not move the glass shelf above the vegetable drawer to ensure correct air circulation.

5.4 DYNAMICAIR

The refrigerator compartment is equipped with a device that allows rapid cooling of food and keeps a more uniform temperature in the compartment.

This device activates automatically when needed, for example for a quick temperature recovery after door opening or when the ambient temperature is high.

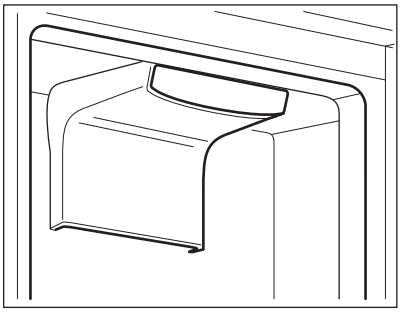

It is possible to switch on the device manually when needed (refer to "DYNAMICAIR function").

The DYNAMICAIR device stops when the door is open and restarts immediately after the door closing.

5.5 Freezing and storage of frozen food

The freezer compartment is suitable for freezing fresh food and storing frozen and deep-frozen food for a long time.

When first starting-up or after a period out of use, before putting the products in the compartment let the appliance run at least 2 hours with the Frostmatic function turned on. To freeze fresh food activate the Frostmatic function at least 24 hours before placing the food to be frozen in the freezer compartment.

To freeze fresh food place it in the top compartment.

The maximum amount of food that can be frozen in 24 hours is specified on the **rating plate**, a label located on the inside of the appliance.

The freezing process lasts 24 hours, during this period do not add other food to be frozen.

In the event of accidental defrosting, for example due to a power failure, if the power has been off for longer than the value shown in the technical characteristics chart under "rising time", the defrosted food must be consumed quickly or cooked immediately and then re-frozen (after cooling).

5.6 Thawing

Deep-frozen or frozen food, prior to being used, can be thawed in the refrigerator compartment or at room temperature, depending on the time available for this operation.

Small pieces may even be cooked still frozen, directly from the freezer: in this case, cooking will take longer.

5.7 Ice-cube production

This appliance is equipped with one or more trays for the production of ice-cubes.

Do not use metallic instruments to remove the trays from the freezer.

1. Fill these trays with water
2. Put the ice trays in the freezer compartment.

5.8 Cold accumulators

The freezer contains at least one cold accumulator which increases storage time in the event of a power cut or breakdown.

6. HINTS AND TIPS

6.1 Normal operating sounds

The following sounds are normal during operation:

- A faint gurgling and bubbling sound from coils sound when refrigerant is pumped.

- A whirring and pulsating sound from the compressor when refrigerant is pumped.
- A sudden cracking noise from inside appliance caused by thermic dilatation (a natural and not dangerous physical phenomenon).
- A faint click noise from the temperature regulator when the compressor switches on or off.

6.2 Hints for energy saving

- Eco mode / default setting preserves fresh and frozen foods while saving energy.
- Fresh Food Compartment (Fridge): Most efficient use of energy is ensured in the configuration with the drawers in the bottom part of the appliance and shelves evenly distributed. Position of the door bins does not affect energy consumption.
- Frozen Compartment (Freezer): The internal configuration of the appliance is the one that ensures the most efficient use of energy.
- Do not remove the cold accumulators from the freezer basket.
- If the ambient temperature is high and the temperature control is set to low temperature and the appliance is fully loaded, the compressor may run continuously, causing frost or ice formation on the evaporator. In this case, set the temperature control toward higher temperature to allow automatic defrosting and to save energy this way.
- Do not open the door frequently or leave it open longer than absolutely necessary.

6.3 Hints for fresh food refrigeration

- Do not store warm food or evaporating liquids in the refrigerator.
- Cover or wrap the food, particularly if it has a strong flavour.
- Position food so that air can circulate freely around it.

6.4 Hints for refrigeration

Useful hints:

- Meat (all types): wrap in a suitable packaging and place it on the glass shelf above the vegetable drawer. Store meat for at most 1-2 days.
- Cooked foods, cold dishes: cover and place on any shelf.
- Fruit and vegetables: clean thoroughly and place in a special drawer. Bananas, potatoes, onions and garlic must not be kept in the refrigerator if not packed.
- Butter and cheese: place in a special airtight container or wrap in an aluminium foil or a polythene bag to exclude as much air as possible.
- Bottles: close with a cap and place on the door bottle shelf, or (if available) on the bottle rack.

6.5 Hints for freezing

- Freeze only top quality, fresh and thoroughly cleaned food products.
- For more efficient freezing and thawing divide food into small portions.
- Wrap the food in aluminium foil or polythene. Make sure that the packages are airtight.
- To avoid increase in temperature of already frozen food, do not place fresh unfrozen food directly next to it.
- Lean foods store better and longer than fatty ones. Salt reduces the storage life of food.
- Do not eat ice cubes, water ices or ice lollies immediately after taking them out of the freezer. Risk of frostbites.
- It is advisable to show the freezing date on each individual pack to enable you to keep tab of the storage time.

6.6 Hints for storage of frozen food

- Make sure that the commercially frozen food products were adequately stored by the retailer.
- Make sure that frozen foodstuffs are transferred from the food store to the freezer in the shortest possible time.
- Once defrosted, food deteriorates rapidly and cannot be refrozen.
- Do not exceed the storage period indicated by the food manufacturer.

7. CARE AND CLEANING

WARNING!
Refer to Safety chapters.

7.1 General warnings

CAUTION!
Unplug the appliance before carrying out any maintenance operation.

This appliance contains hydrocarbons in its cooling unit; maintenance and recharging must therefore only be carried out by authorized technicians.

The accessories and parts of the appliance are not suitable for washing in a dishwasher.

7.2 Periodic cleaning

CAUTION!
Do not pull, move or damage any pipes and/or cables inside the appliance.

CAUTION!
Do not damage the cooling system.

The equipment has to be cleaned regularly:

1. Clean the inside and accessories with lukewarm water and some neutral soap.
2. Regularly check the door seals and wipe them clean to ensure they are clean and free from debris.
3. Rinse and dry thoroughly.
4. If accessible, clean the condenser and the compressor at the back of the appliance with a brush.
   This will improve the performance of the appliance and save electricity consumption.

7.3 Defrosting of the refrigerator

Frost is automatically eliminated from the evaporator of the refrigerator compartment every time the motor compressor stops, during normal use. The defrost water drains out through a trough into a special container at the back of the appliance, over the motor compressor, where it evaporates.

It is important to periodically clean the defrost water drain hole in the middle of the refrigerator compartment channel to prevent the water overflowing and dripping onto the food inside.

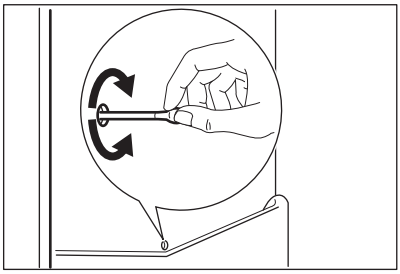

7.4 Defrosting of the freezer

The freezer compartment is frost free. This means that there is no build up of frost when it is in operation, neither on the internal walls, nor on the foods.

7.5 Periods of non-operation

When the appliance is not in use for long periods, take the following precautions:

1. Disconnect the appliance from electricity supply.
2. Remove all food.
3. Clean the appliance and all accessories.
4. Leave the door/doors open to prevent unpleasant smells.

CAUTION!
If you want to keep the appliance switched on, ask somebody to check it once in a while to prevent the food inside from spoiling in case of a power failure.
We recommend activating Holiday Mode.

8. TROUBLESHOOTING

WARNING!
Refer to Safety chapters.

8.1 What to do if...

Problem	Possible cause	Solution
The appliance does not operate.	The appliance is switched off.	Switch on the appliance.
	The mains plug is not connected to the mains socket correctly.	Connect the mains plug to the mains socket correctly.
	There is no voltage in the mains socket.	Connect a different electrical appliance to the mains socket. Contact a qualified electrician.
Audible or visual alarm is on.	The cabinet has been recently switched on or the temperature is too high.	Refer to "High temperature alarm".
	The temperature in the appliance is too high.	Contact a qualified electrician or contact the nearest Authorised Service Centre.
	The door is left open.	Close the door. Refer to "Door open alarm"
A o or o symbol is shown instead of numbers on the Temperature Display.	Temperature sensor problem.	Contact the nearest Authorised Service Centre (the cooling system will continue to keep food products cold, but temperature adjustment will not be possible).
The lamp does not work.	The lamp is in stand-by.	Close and open the door.
	The lamp is defective.	Contact the nearest Authorised Service Centre.

Problem	Possible cause	Solution
The compressor operates continually.	Temperature is set incorrectly.	Refer to "Operation".
	Many food products were put in at the same time.	Wait few hours and then check the temperature again.
	The room temperature is too high.	Refer to climate class chart on the rating plate.
	Food products placed in the appliance were too warm.	Allow food products to cool to room temperature before storing.
	The door is not closed correctly.	Refer to "Closing the door".
	The "Frostmatic function" or "Coolmatic function" is switched on.	Refer to "Frostmatic function" or "Coolmatic function".
There is too much frost and ice.	The door is not closed correctly or the gasket is deformed/dirty.	Refer to "Closing the door".
	The water drainage plug is not correctly positioned.	Position the water drainage plug in the correct way.
	Appliance is fully loaded and it is set to the lowest temperature	Set a higher temperature. Refer to "Operation".
	Temperature set in the appliance is too low and the ambient temperature is too high.	Set a higher temperature. Refer to "Operation"
	Temperature is set incorrectly.	Refer to "Operation" .
The compressor does not start immediately after pressing the "Frostmatic" or "Coolmatic", or after changing the temperature.	This is normal, no error has occurred.	The compressor starts after a period of time.
Water flows on the rear plate of the refrigerator.	During the automatic defrosting process, frost melts on the rear plate.	This is correct.
Water flows inside the refrigerator.	Food products prevent the water to flow into the water collector.	Make sure that food products do not touch the rear plate.

Problem	Possible cause	Solution
	The water outlet is clogged.	Clean the water outlet.
Water flows on the floor.	The melting water outlet is not connected to the evaporative tray above the compressor.	Attach the melting water outlet to the evaporative tray.
Temperature cannot be set.	The "Frostmatic function" or "Coolmatic function" is switched on.	Switch off "Frostmatic function" or "Coolmatic function" manually, or wait until the function resets automatically to set the temperature. Refer to "Frostmatic function" or "Coolmatic function".
dEMo appears on the display.	The appliance is in demonstration mode.	Keep the OK pressed for approximately 10 seconds until a long sound is heard and display shuts off for a short time.
The temperature in the appliance is too low/too high.	The temperature regulator is not set correctly.	Set a higher/lower temperature.
	The door is not closed correctly.	Refer to "Closing the door".
	The food products' temperature is too high.	Let the food products temperature decrease to room temperature before storage.
	Many food products are stored at the same time.	Add less food products at the same time.
	The door has been opened often.	Open the door only if necessary.
	The "Frostmatic function" or "Coolmatic function" is switched on.	Refer to "Frostmatic function" or "Coolmatic function".
	There is no cold air circulation in the appliance.	Make sure that there is cold air circulation in the appliance.

If the advice does not lead to the desired result, contact the nearest Authorised Service Centre.

8.2 Replacing the lamp

The appliance is equipped with a longlife LED interior light.

Only service is allowed to replace the lighting device. Contact your Authorised Service Centre.

8.3 Closing the door

1. Clean the door gaskets.
2. If necessary, adjust the door. Refer to assembly instructions.

3. If necessary, replace the defective door gaskets. Contact the Authorised Service Centre.

9. NOISES

There are some sounds during normal running (compressor, refrigerant circulation).

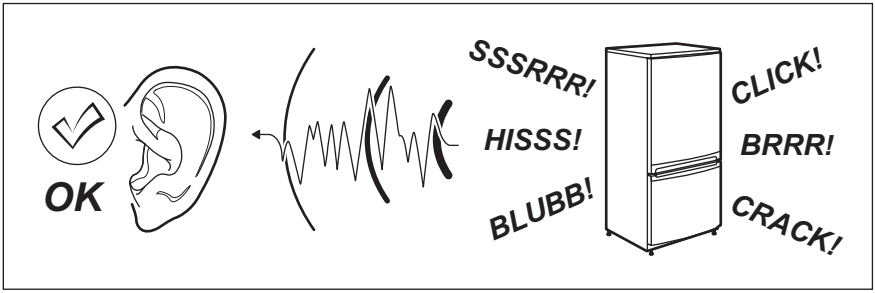

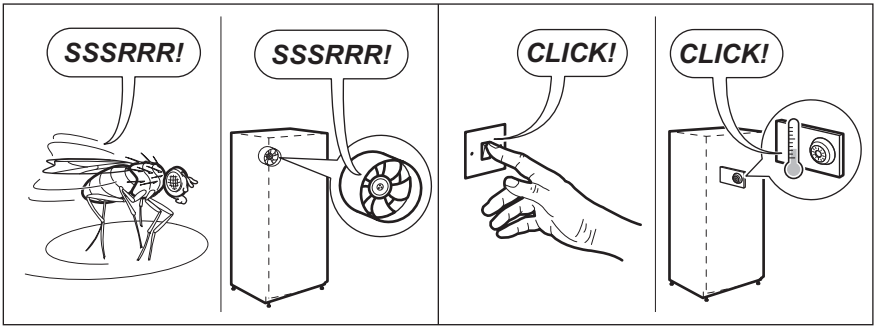

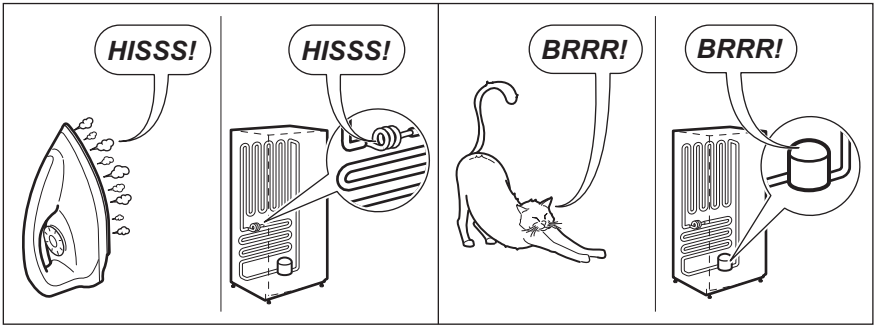

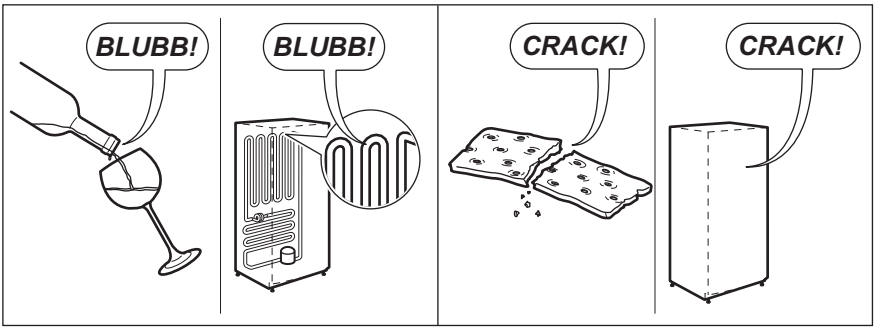

10. TECHNICAL DATA

10.1 Technical data

Dimensions of the recess	
Height	1894 mm
Width	560 mm
Depth	550 mm

Voltage	230 - 240 V
Frequency	50 Hz
Rising time	21 h

The technical information is situated in the rating plate, on the external or internal side of the appliance and on the energy label.

11. ENVIRONMENTAL CONCERNS

Recycle materials with the symbol ♺. Put the packaging in relevant containers to recycle it. Help protect the environment and human health by recycling waste of electrical and electronic appliances. Do not dispose of appliances marked with the symbol with the household waste. Return the product to your local recycling facility or contact your municipal office.

www.aeg.com/shop



222375228-C-072020

CE

AEG