SE2219H/HX Outline Dimension
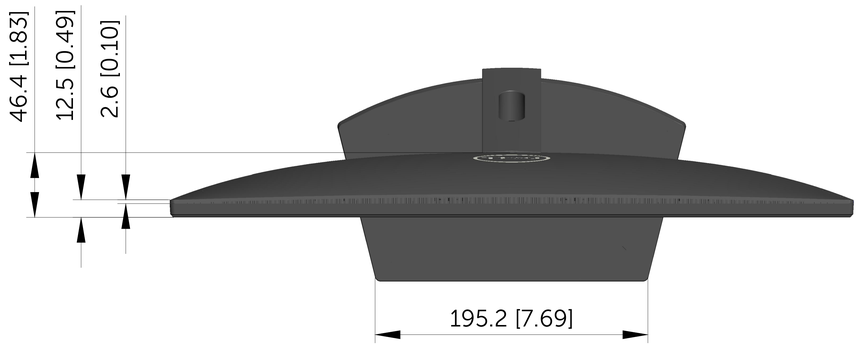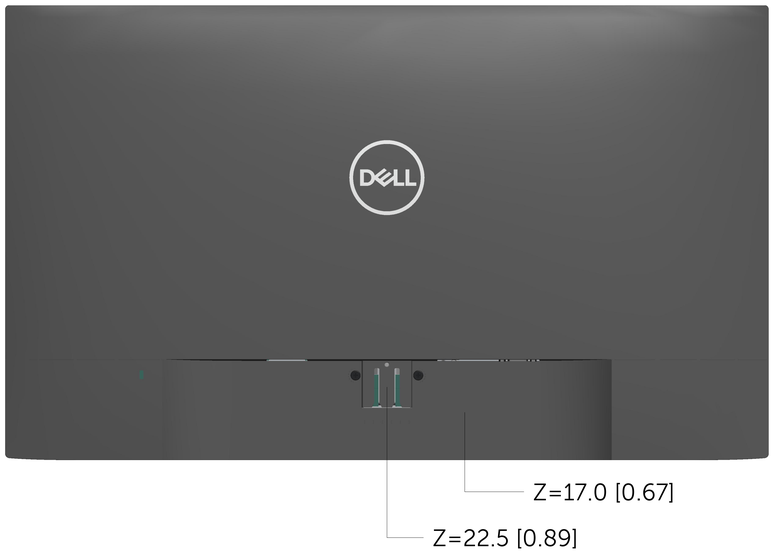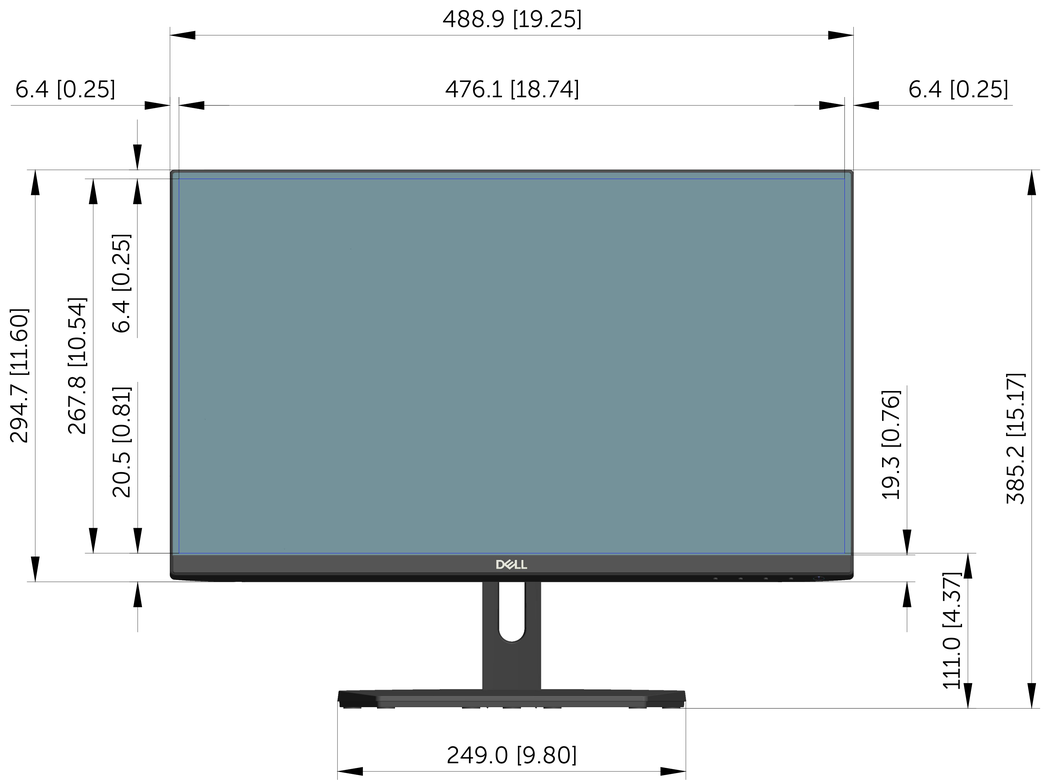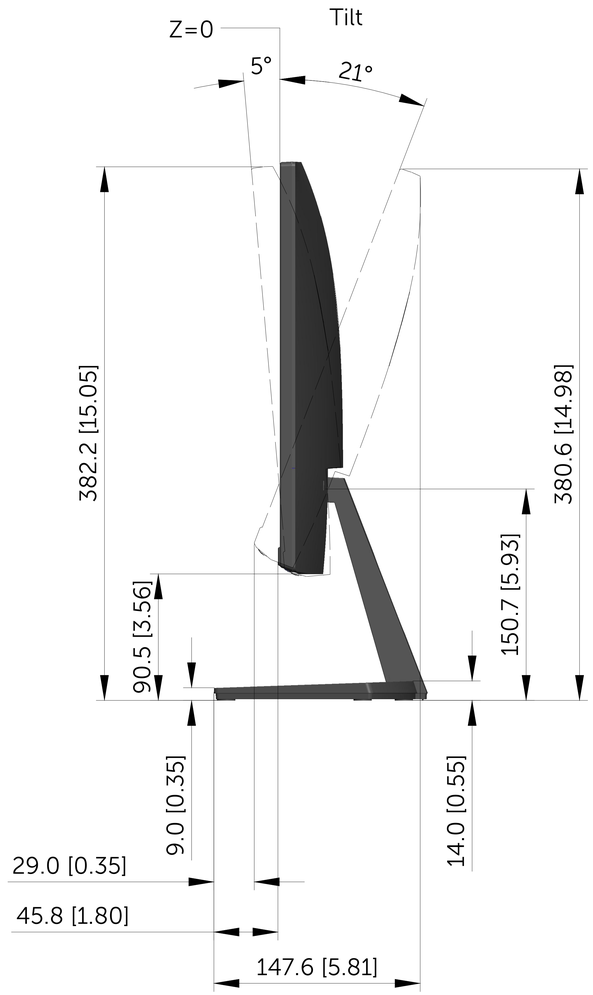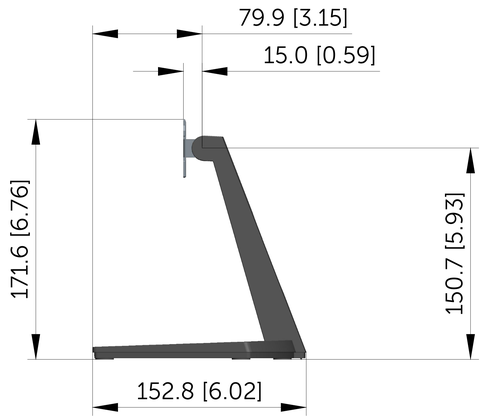
Unit : mm(inch)
Dimension : Nominal
Scale : Not to scale