LogiLink®
manufactured by
CANOVATE®

Canovate 19" Open frame rack



Canovate® 19" Open frame rack is designed for a professional cable management in protected data center rooms. Special cabling sections on the left and right side provide a flexible and proper cable management.

Technical Features

Material:	2 mm steel
Maximum Static Load:	Up to 600 kg
Finish:	Frame: Electrostatic Powder Paint
Color:	RAL 7035 light grey or RAL 9005 black
Height:	1382,1 mm (42U)
Width:	600 mm
Depth:	700 mm



Standard Configuration

- Superior design for complex cable management
- 19" universal hole pattern for front and side mounting of equipment
- Easy cable management through large cut outs on the frame and cable conducts by cable clamps can be mountable on all faces
- Base openings ready for individual positioning of the frame
- Base plate or castors
- Delivery in flat pack including 4 castors

42U Single Open Frame

Color	Part No.	EAN Code
RAL 7035 light grey	R42S68G	8698800002533
RAL 9005 black	R42S68B	8698800002540

42U Double Open Frame

Color	Part No.	EAN Code
RAL 7035 light grey	R42D68G	8698800002557
RAL 9005 black	R42D68B	8698800002564

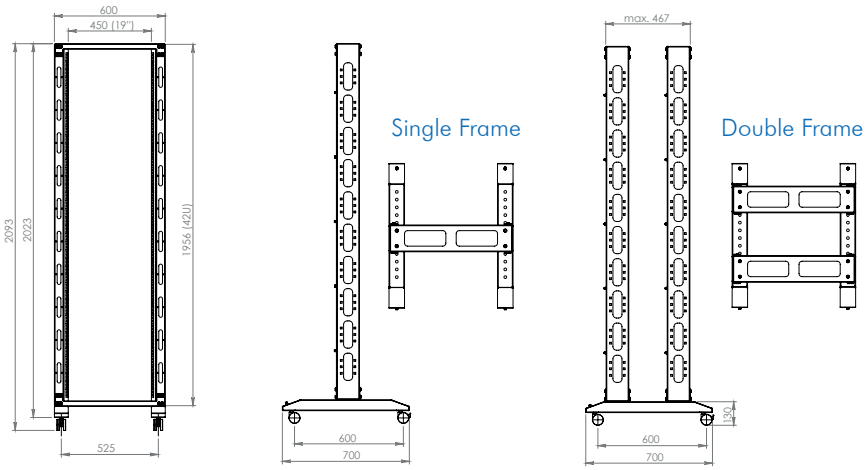

RoHS compliant CE

* The specifications and pictures are subject to change without notice.
*All trade names referenced are the registered namework of their respective owners.