User's Manual

OL1000RTXL2U
OL1000RTXL2UN
OL1500RTXL2U
OL1500RTXL2UN
OL2200RTXL2U
OL2200RTXL2UN
OL3000RTXL2U
OL3000RTXL2UN
OL3000RTXL2UHVN

Cyber Power Systems (USA), Inc.
4241 12th Avenue East Suite 400 Shakopee, MN 55379
Phone: 877-297-6937
Fax: 952-403-0009
www.cyberpowersystems.com

K01-0000500-06

IMPORTANT SAFETY INSTRUCTIONS

This manual contains important instructions. Please read and follow all instructions carefully during installation and operation of the unit. Read this manual thoroughly before attempting to unpack, install, or operate the UPS.

CAUTION! The UPS must be connected to a grounded AC power outlet with fuse or circuit breaker protection. DO NOT plug the UPS into an outlet that is not grounded. If you need to power-drain this equipment, turn off and unplug the unit.

CAUTION! The battery can power hazardous components inside the unit, even when the AC input power is disconnected.

CAUTION! The UPS should be placed near the connected equipment and easily accessible.

CAUTION! To prevent the risk of fire or electric shock, install in a temperature and humidity controlled indoor area, free of conductive contaminants. (Please see specifications for acceptable temperature and humidity range).

CAUTION! (No User Serviceable Parts): Risk of electric shock, do not remove cover. No user serviceable parts inside. Refer servicing to qualified service personnel.

CAUTION! (Non-Isolated Battery Supply): Risk of electric shock, battery circuit is not isolated from AC power source; hazardous voltage may exist between battery terminals and ground. Test before touching.

CAUTION! To reduce the risk of fire, connect the UPS to a branch circuit with 12 amperes (OL1000) / 15 amperes (OL1500) / 20 amperes (OL2200) / 30 amperes (OL3000RTXL2U) / 16 amperes (OL3000RTXL2UHV) maximum over-current protection in accordance with the National Electric Code, ANSI/NFPA 70.

CAUTION! The AC outlet where the UPS is connected should be close to the unit and easily accessible.

CAUTION! Please use only UL-marked mains cable, (e.g. the mains cable of your equipment), to connect the UPS to the AC outlet.

CAUTION! Please use only UL-marked power cables to connect any equipment to the UPS.

CAUTION! When installing the equipment, ensure that the sum of the leakage current of the UPS and the connected equipment does not exceed 3.5mA.

CAUTION! The OL1000 / OL1500 / OL2200 / OL3000 models may only be installed by qualified maintenance personnel..

CAUTION! Do not unplug the unit from AC Power during operation, as this will invalidate the protective ground insulation.

CAUTION! To avoid electric shock, turn off and unplug the unit before installing the input/output power cord with a ground wire. Connect the ground wire prior to connecting the line wires!

CAUTION! Do not use an improper size power cord as it may cause damage to your equipment and cause fire hazards.

CAUTION! Wiring must be done by qualified personnel.

CAUTION! DO NOT USE FOR MEDICAL OR LIFE SUPPORT EQUIPMENT! Under no circumstances this unit should be used for medical applications involving life support equipment and/or patient care.

CAUTION! DO NOT USE WITH OR NEAR AQUARIUMS! To reduce the risk of fire, do not use with or near aquariums. Condensation from the aquarium can come in contact with metal electrical contacts and cause the machine to short out.

CAUTION! Do not dispose of batteries in fire as the battery may explode.

CAUTION! Do not open or mutilate the battery, released electrolyte is harmful to the skin and eyes.

CAUTION! A battery can present a risk of electric shock and high short circuit current. The following precaution should be observed when working on batteries

1. Remove watches, rings or other metal objects.
2. Use tools with insulated handles.

CAUTION! The unit has a dangerous amount of voltage. When the UPS indicators is on, the units may continue to supply power thus the unit's outlets may have a dangerous amount of voltage even when it's not plugged in to the wall outlet.

CAUTION! Make sure everything is turned off and disconnected completely before conducting any maintenance, repairs or shipment.

CAUTION! Connect the Protection Earth (PE) safety conductor before any other cables are connected.

WARNING! (Fuses): To reduce the risk of fire, replace only with the same type and rating of fuse.

DO NOT INSTALL THE UPS WHERE IT WOULD BE EXPOSED TO DIRECT SUNLIGHT OR NEAR A STRONG HEAT SOURCE!

DO NOT BLOCK OFF VENTILATION OPENINGS AROUND THE HOUSING!

DO NOT CONNECT DOMESTIC APPLIANCES SUCH AS HAIR DRYERS TO UPS OUTPUT SOCKETS!

SERVICING OF BATTERIES SHOULD BE PERFORMED OR SUPERVISED BY PERSONNEL KNOWLEDGE OF BATTERIES AND THE REQUIRED PRECAUTIONS. KEEP UNAUTHORIZED PERSONNEL AWAY FROM BATTERIES!

Copyright © 2020 Cyber Power Systems, Inc.

UNPACKING

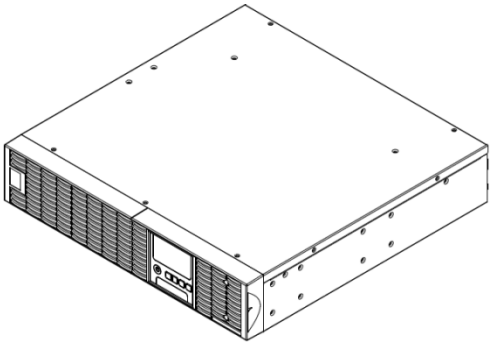

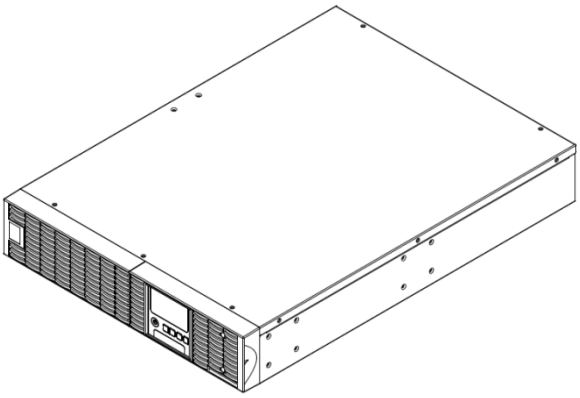

1K/1.5KVA or 2.2K/3KVA UPS

User's manual

Register card

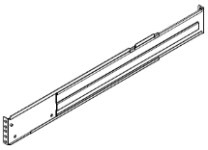

Rackmount left rail

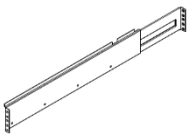

Rackmount right rail

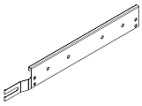

Left hanging bracket

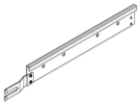

Right hanging bracket

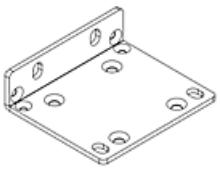

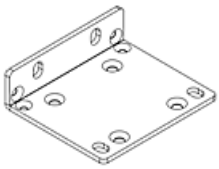

Rackmount ears (Stands) (2)

USB communication cable

Serial Interface Cable (RS-232)

M5X7L black flat head screws (8)

M5X12L black pan head screws (12)

M5X6L silver pan head screws (6)

Plastic washers (8)

Screw hole dust covers (12)

Rubber pads (12)

PowerPanel management software download card

*** PowerPanel® Business Edition software is available on our website. Please visit <u>www.cyberpowersystems.com</u> and go to the Software section for FREE download.**

Copyright © 2020 Cyber Power Systems, Inc.

HARDWARE INSTALLATION

These versatile UPS systems can be mounted in a rackmount or vertical tower orientation. This versatility is especially important to growing organizations with changing needs that value having the option to position a UPS on a floor or in a rackmount system. Please follow the instructions below for the respective mounting methods.

SAFETY PRECAUTIONS

CAUTION! To prevent the risk of fire or electric shock, only use the supplied hardware to attach the mounting brackets.

RACKMOUNT INSTALLATION FOR 4-POST RACK

Step 1: Remove the dust covers
Remove the dust covers *7pcs from the screw holes.

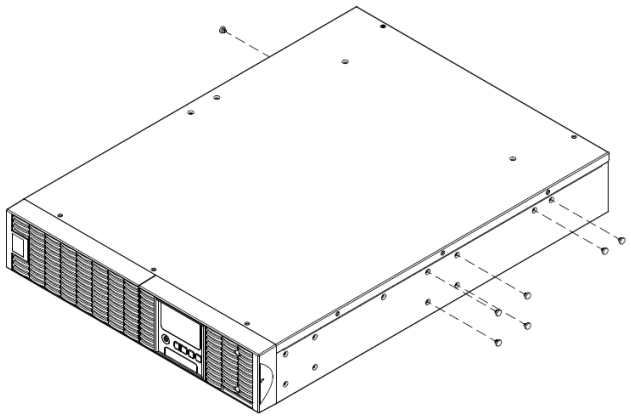

Step 2: Rackmount ears & hanging brackets installation
Attach two rackmount ears to the UPS using eight black M5X7Lscrews. Attach the included hanging brackets using six silver M5X6Lscrews as shown below.

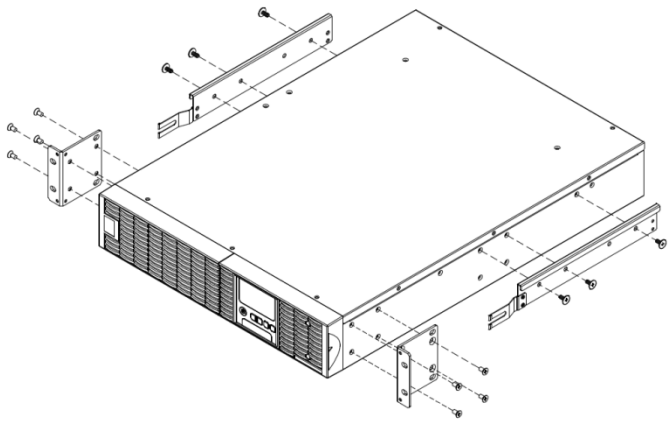

Step 3: Rackmount rail Installation
The mounting depth of the included rackmount rails can adjust from 20.5 inches to 36 inches (52 cm to 91.5 cm). Select the proper holes in the rack for positioning the UPS in the rack. The UPS takes up 2 rack units: rack hole positions 1 through 6.

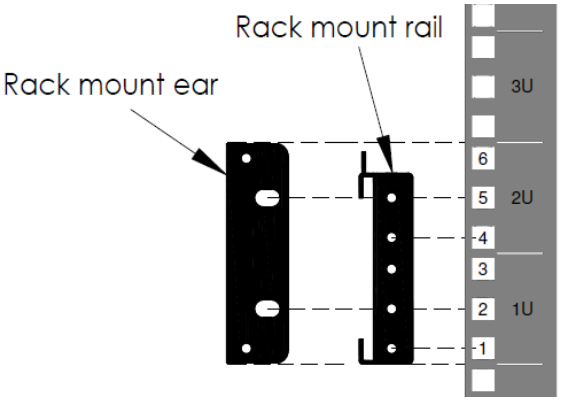

Position the guide screw on the back of the rackmount rails into the rear rack square holes to temporarily support the rails in place.

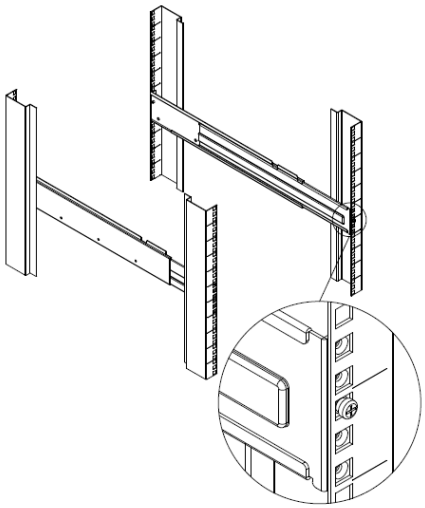

Copyright © 2020 Cyber Power Systems, Inc.

Step 4: Adjust rackmount rails to fit your rack

Adjust the rail depth to match your rack depth. Attach each rackmount rail to your rack with two black M5X12L screws and two plastic washers at the front of the rack (square holes 1 and 4 as shown below). Secure the rail to the rear of the rack with two black M5X12L screws and two plastic washers.

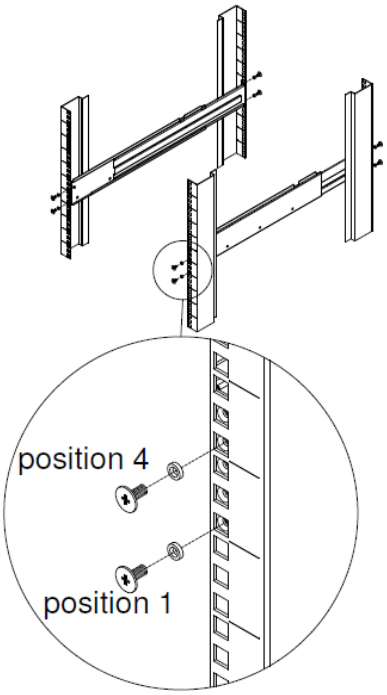

Step 5: Place and secure the UPS on the rails

Slide the hanging brackets on the UPS on to the rails mounted in the rack with the front of the unit facing toward you. Secure the UPS to your rack with four black M5X12L screws at the front of the rack (square holes 2 and 5 as shown below).

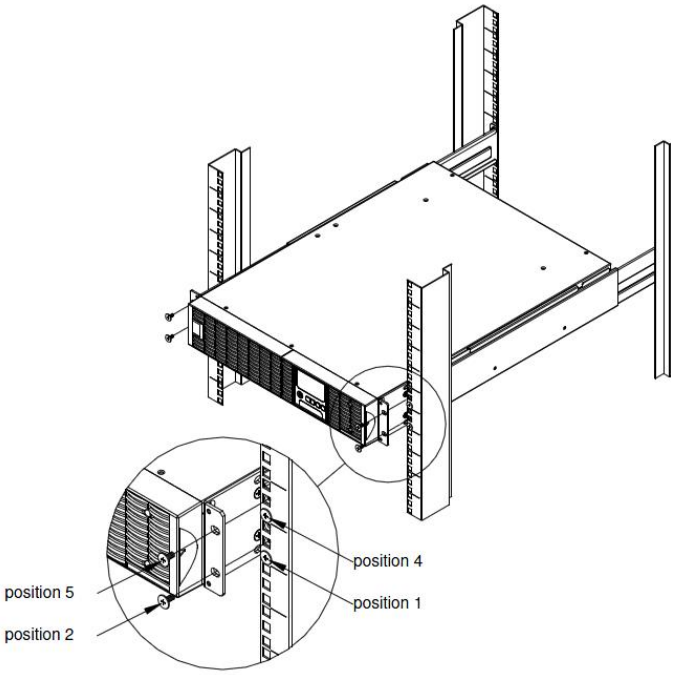

How to slide the UPS out from the rack

The UPS will be secured by a safety locking mechanism midway of pulling it out of the rack. Use both hands to hold the UPS and press the safety locking tab to pull the UPS out.

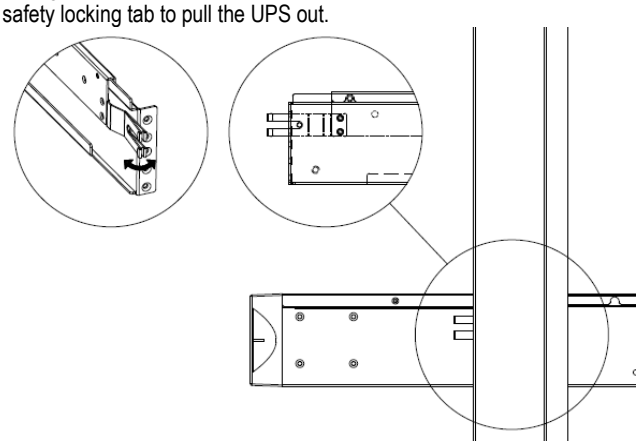

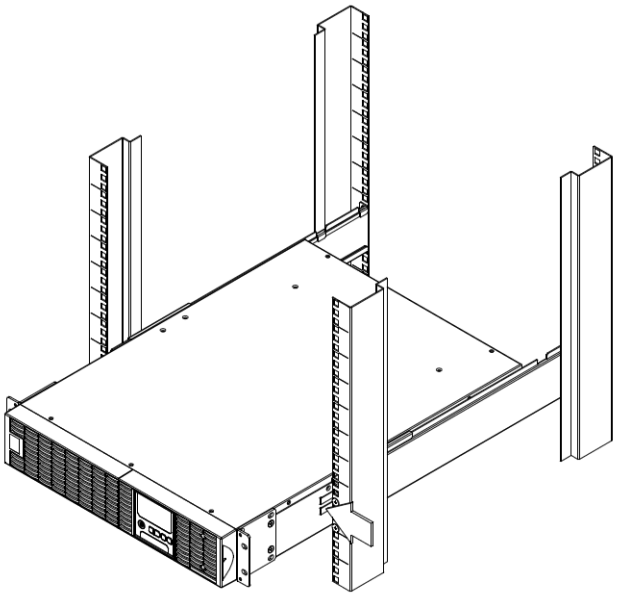

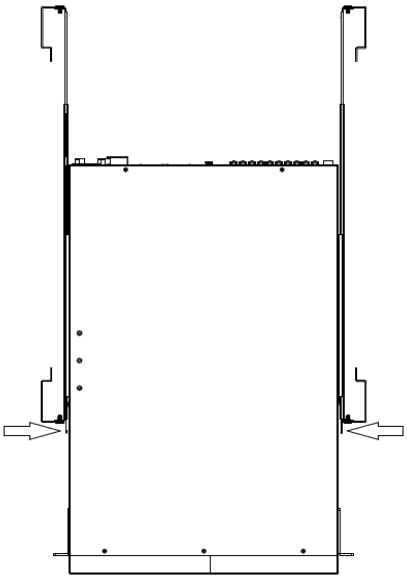

Copyright © 2020 Cyber Power Systems, Inc.

RACKMOUNT INSTALLATION FOR 2-POST RACK

CAUTION! Due to the weight of this unit, it is strongly recommended to install it at the bottom of the rack.

CAUTION! Prior to installing the unit, remove internal batteries to reduce the weight of the unit. Refer to the battery replacement section in this user manual for instructions.

CAUTION! It is strongly recommend having 2-3 people assist during the installation process.

CAUTION! It is strongly recommended that the 2 post rack be bolted to the floor prior to the installation of the UPS.

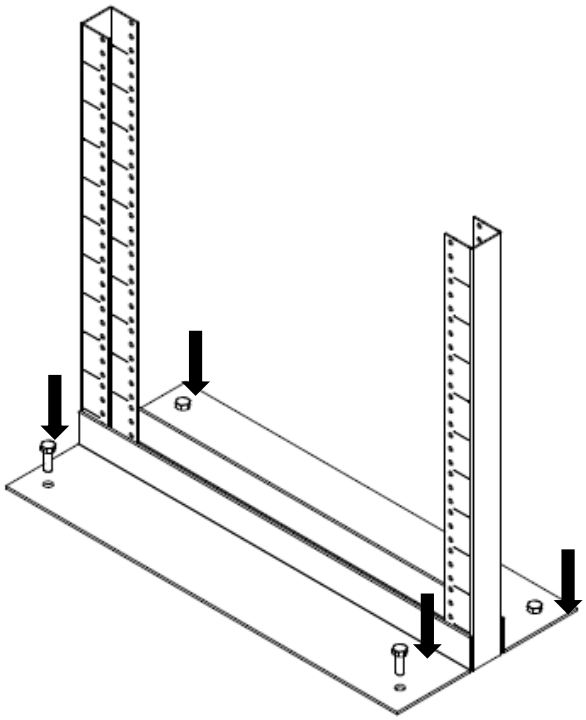

Step 1: Remove side dust covers

Remove seven dust covers from screw holes as shown below.

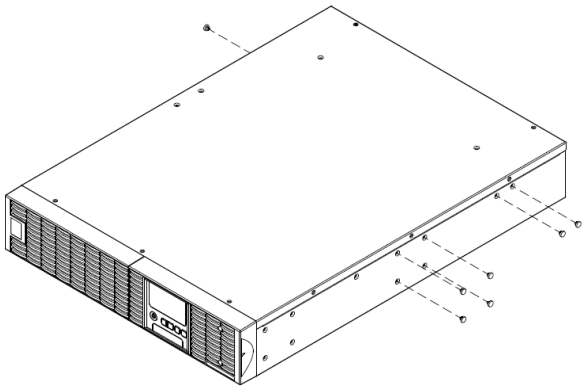

Step 2: Rackmount ears installation

Attach the included rackmount ears to the center holes on the sides of the UPS using eight black M5X7L screws as shown below.

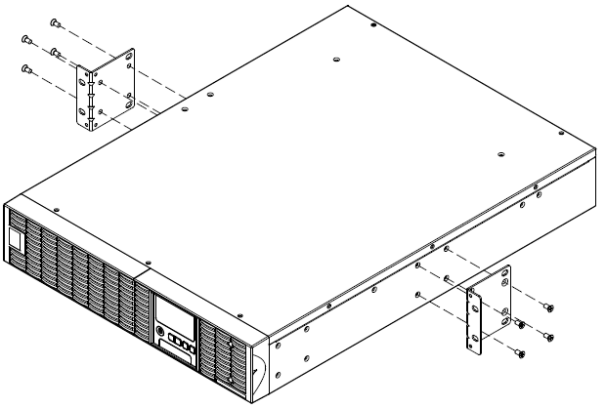

Step 3: Secure the UPS to the rack

Secure the UPS to your rack with four black M5X12L screws at the front of the rack (square holes 2 and 5 as shown below)

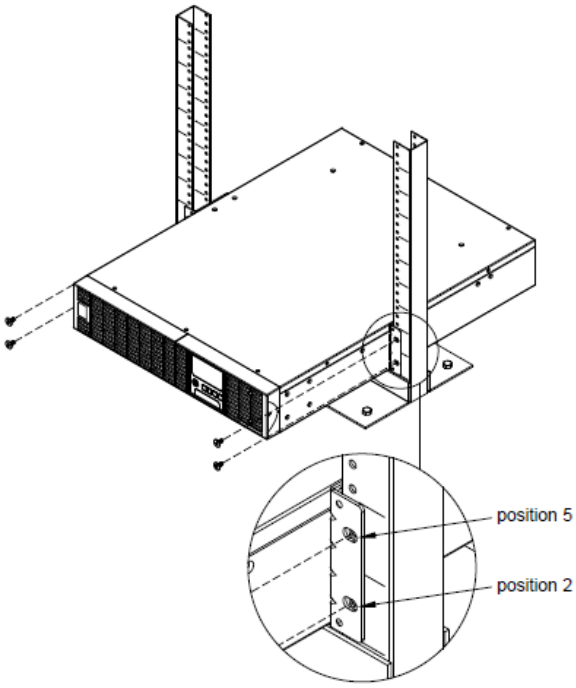

Copyright © 2020 Cyber Power Systems, Inc.

HARDWARE INSTALLATION

VERTICAL/TOWER INSTALLATION

Step 1: Adhere the rubber feet on the bottom side of base stands

Adhere the protective rubber pads to the left hand side of the UPS and to the rackmount ears as shown below. The rackmount ears will be used as tower stands.

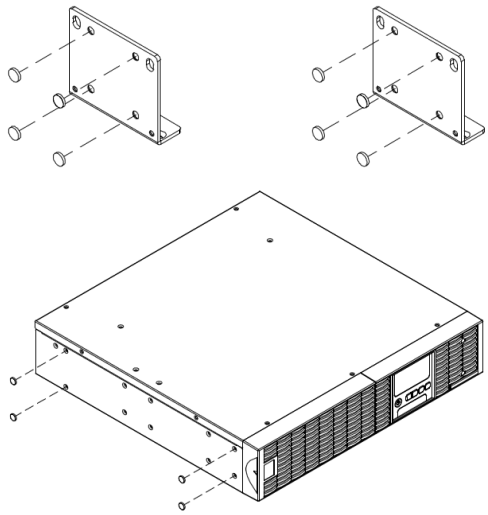

Step 2: Attach the base stands and attach the dust covers

Stand the UPS system on its side and attach the tower stands using four black M5X12 screws onto the bottom of the UPS as shown below. Insert five dust covers into the open screw holes on top.

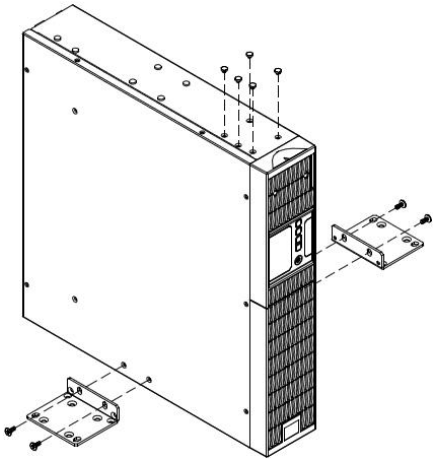

Step 3: Rotate the Multifunction LCD Module

Unscrew the upper panel of the UPS. Separate the upper panel from the UPS. Gently lift the LCD module out. Rotate it to the tower orientation. Reinstall it for a tower configuration.

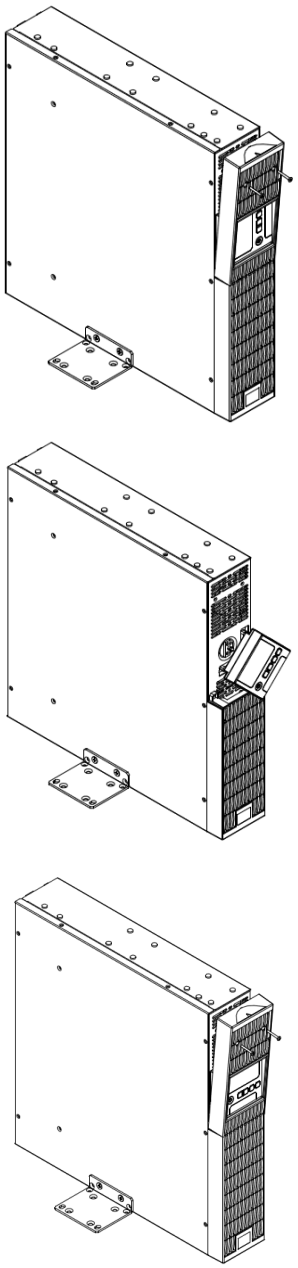

ELECTRICAL INSTALLATION

After completing the hardware installation of the UPS, you are now ready to plug in the UPS and connect your equipment.

SAFETY PRECAUTIONS

CAUTION! Installation environment should be in a temperature and humidity controlled indoor area free of conductive contaminants. Do not install this UPS where excessive moisture or heat is present (Please see specifications for acceptable temperature and humidity range).

CAUTION! Never install a UPS, or associated wiring or equipment, during a lightning storm.

CAUTION! Do not work alone under hazardous conditions.

CAUTION! In case of the risk of electric shock, do not remove the top cover.

CAUTION! The battery can energize hazardous live parts inside even when the AC input power is disconnected.

Copyright © 2020 Cyber Power Systems, Inc.

SYSTEM BLOCK DIAGRAM

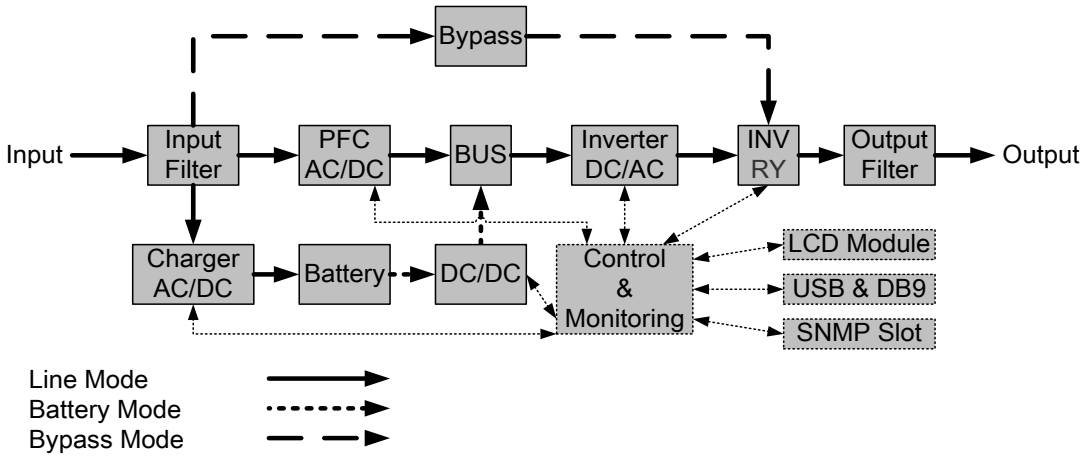

HARDWARE INSTALLATION GUIDE

1. Battery charge loss may occur during shipping and storage. Before using the UPS, it's strongly recommended to charge batteries for four hours to ensure the batteries' maximum charge capacity. To recharge the batteries, simply plug the UPS into an AC outlet.

2. When using the included software, connect either the serial or the USB cable between the computer and the corresponding port on the UPS. Note: If the USB port is used, the serial port will be disabled. They cannot be used simultaneously. After connecting to either the USB port or the Serial port on the UPS, a computer with the PowerPanel® Business Edition Agent software installed can control the operating schedule, battery test, outlets, as well as obtain UPS status information. However, other computers with PowerPanel® Business Edition Client software can only obtain UPS status information via LAN connection.

3. Connect your computer, monitor, and any externally-powered data storage device (Hard drive, Tape drive, etc.) into the outlets only when the UPS is off and unplugged. DO NOT plug a laser printer, copier, space heater, vacuum, paper shredder or other large electrical device into the UPS. The power demands of these devices will overload and possibly damage the unit.

4. To protect a fax machine, telephone, modem line or network cable, connect the telephone or network cable from the wall jack outlet to the jack marked "IN" on the UPS and connect a telephone cable or network cable from the jack marked "OUT" on the UPS to the modem, computer, telephone, fax machine, or network device.

5. Press the ON/OFF switch to turn the UPS on. The Power-On indicator light will display when activated. If an overload is detected, an audible alarm will sound and the UPS will continuously emit two beeps per second. For resetting the unit, unplug some equipment from the outlets. Make sure your equipment carries a load current within the unit's safe range, (refer to the technical specifications).

6. This UPS is equipped with an auto-charge feature. When the UPS is plugged into an AC outlet, the battery will automatically charge, even when the unit is switched off.

7. To maintain an optimal battery charge, leave the UPS plugged into an AC outlet at all times.

8. Before storing the UPS for an extended period of time, turn the unit OFF. Then cover it and store it with the batteries fully charged. Recharge the batteries every three months to ensure good battery capacity and long battery life. Maintaining a good battery charge will help prevent possible damage to the unit from battery leakage.

9. The UPS has one USB port (default) and one Serial port that allows connection and communication between the UPS and any attached computer running the PowerPanel® Business Edition Agent software. The UPS can control the computer's shutdown during a power outage through the connection while the computer can monitor the UPS and alter various programmable parameters. Note: Only one communication port can be used at a time. The port not in use will automatically become disabled or the serial port will be disabled if both ports are attached.

10. EPO (Emergency Power Off) Port:
EPO ports allow administrators the capability to connect the UPS unit to customer-supplied EPO switches. These installations give operators a single access point to immediately power-off all equipment connected to the UPS during an emergency.

11. To avoid electric shock, turn the unit OFF and disconnect the unit from utility power before hardwiring the UPS (in/out power cord). The in/out power cord MUST be grounded.

12. Please note the internal UPS temperature will increase when fans are not in operation or ventilation is obstructed. When the high temperature sensor activates protection, the UPS generates an alarm and shuts down to avoid unexpected equipment damage. When the over temperature occurs, please check the Trouble Shooting section on page 16. If the condition persists, please contact CyberPower for technical support.

Copyright © 2020 Cyber Power Systems, Inc.

POWER MODULE FRONT/REAR PANEL DESCRIPTION

1. Power Button / Power on Indicator
Master ON/OFF for the UPS. Indicates that the UPS is on and supplying power.

2. UPS Status / Fault / Replace Battery LED Indicator
Indicates the status of the UPS, displaying whether it is operating in Line, Battery or Bypass Mode, if it has an internal fault or if the battery needs to be replaced.

3. Multifunction LCD Readout
Shows UPS status, information, settings and events.

4. Function Buttons
Scroll up, scroll down, Enter, and Escape..

5. Input Circuit Breaker
Provides input overload and fault protection.

6. Battery Backup & Surge Protected Outlets
Provides battery backup and surge protection. They ensure power is provided to connected equipment over a period of time during a power failure.

Critical / Noncritical Load
Allows the creation of load priorities to ensure that battery power reserves are transferred to specified outlets during a power outage. The unit can be programmed to provide additional runtime for equipment connected to the “CRITICAL” outlets, while stopping the power supply to equipment connected to “NONCRITICAL” outlets after a designated period of time.

7. Serial Port
Serial port provides communication between the UPS and the computer. The UPS can control the computer’s shutdown during a power outage through the connection while the computer can monitor the UPS and alter its various programmable parameters.

8. USB port
This is a connectivity port which allows communication and control between the UPS and the connected computer. It is recommended to install the PowerPanel® Business Edition Agent software on the computer connected with the USB cable.

9. Surge Protected Communication Ports RJ-45/RJ-11
These ports are used to protect standard RJ-45/RJ-11 based products (ADSL, LAN, Phone/ Modem-Lines) and cabling systems from surges.

10. Relay Output Connector
Convert UPS signals into real potential-free Dry Contacts for industrial control.

11. Expansion slot
Slot to install optional remote management card. Remote Management Card is pre-installed in select models.

12. Extended Runtime Battery Module Connector
Connection for additional CyberPower External Battery modules.

13. EPO (Emergency Power Off) Connector
Enables an emergency UPS Power-Off from a remote location.

14. AC Input Inlet
Connect the AC power cord to a properly wired and grounded outlet.

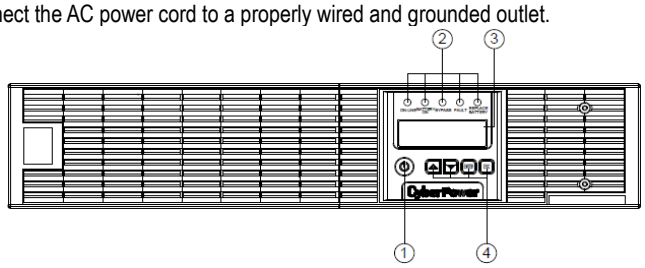

OL1000RTXL2U / OL1500RTXL2U / OL2200RTXL2U / OL3000RTXL2U / OL3000RTXL2UHV

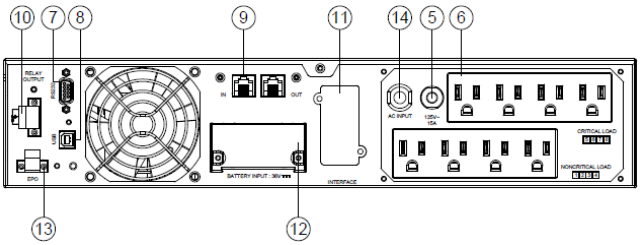

OL1000RTXL2U / OL1500RTXL2U

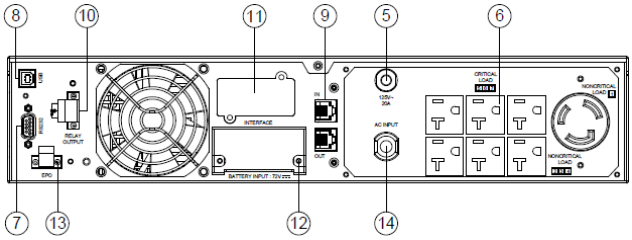

OL2200RTXL2U

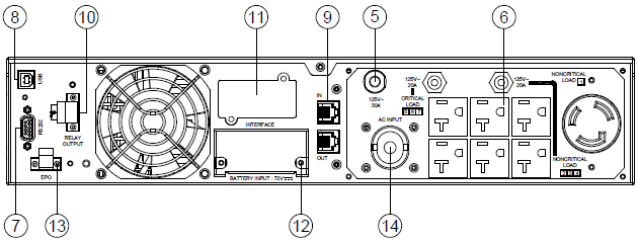

OL3000RTXL2U

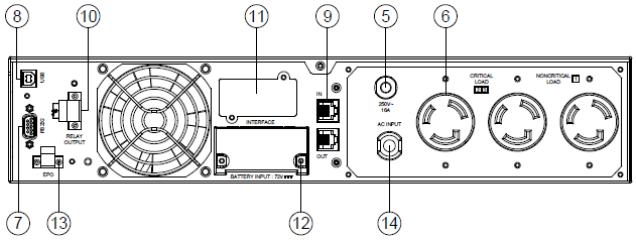

OL3000RTXL2UHV

Copyright © 2020 Cyber Power Systems, Inc.

OPERATION INSTRUCTIONS FOR LCD MODULE

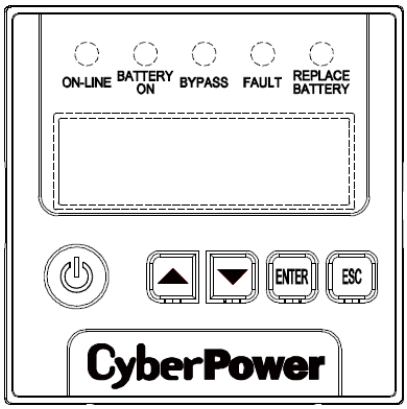

LED INDICATORS – UPS STATUS

LED Indicators	Color	UPS Status Description
ON/OFF	White	UPS power is on.
ON-LINE	Green	UPS is operating in Line Mode.
BATTERY ON	Yellow	UPS is operating in Battery Mode.
BYPASS	Yellow	UPS is operating in Bypass Mode, Manual Bypass or ECO (Economy) Mode.
FAULT	Red	UPS has an internal fault. See “Trouble Shooting” for additional information.
REPLACE BATTERY	Red	Battery will soon need to be replaced due to insufficient runtime.

LCD SCREEN – UPS STATUS

LCD Screen	UPS Status Description
Line Mode	UPS is operating in Line Mode.
Battery Mode	UPS is operating in Battery Mode.
Bypass Mode	UPS is operating in Bypass Mode.
Manual Bypass	UPS is operating in Manual Bypass.
ECO Mode	UPS is operating in ECO (Economy) Mode.

BUTTON OPERATION

Button	Operation Description
ON/OFF	Press this button to turn on or turn off UPS.
▲	Press this button to scroll up in the LCD menu.
▼	Press this button to scroll down in the LCD menu.
ENTER	Press this button to select an option.
ESC	Press this button to cancel or return to previous LCD menu.

Copyright © 2020 Cyber Power Systems, Inc.

LCD SETUP FUNCTIONS

MULTI-FUNCTION LCD MAIN MENU

Press "**Enter**" button to activate "**MAIN MENU**".

MAIN MENU submenu	Function Description
Information	Displays the UPS information.
Configure	Displays the UPS settings that can be configured by the user.
Event Log	Displays the 5 most recent events, by event count, time (day/hour/minute), and event description.

LCD INFORMATION READOUT

There are 24 types of UPS information available for display.

1. Press the "**ENTER**" button to activate the "**MAIN MENU**".
2. Press the "▲" and "▼" buttons to scroll to the "**Information**" option.
3. Press the "**ENTER**" button to select the "**Information**" submenu.
4. Press the "▲" and "▼" buttons to scroll through the "**Information**" submenu in the following table.
5. Press the "**ESC**" button to return to UPS Status.

Information Submenu	Description
O/P Volt = XXX.XV	Displays the Output Voltage
O/P Freq = XX.XHz	Displays the Output Frequency
I/P Volt = XXX.XV	Displays the Input Voltage
I/P Freq = XX.XHz	Displays the Input Frequency
O/P Load = XXX%	Displays the Output Load as a Percentage of Maximum load
O/P Amp = X.XA	Displays the Output Current
O/P Watt =XXXXXW	Displays the Output Wattage
O/P VA =XXXXXVA	Displays the Output VA
Load Energy XXXX.XKWh	Display UPS Load Energy Consumption
BAT Volt = XXX.XV	Displays the Battery Voltage
BAT Cap = XXX%	Displays the Estimated Percentage of Battery Capacity
BAT Runtime=XXXM	Displays the Estimated Battery Runtime in Minutes
EBM Number= X	Displays the External Battery Module Number
TEMP =XX°C / XXX°F	Displays the Approximate inside Temperature in both ℃(Celsius) and ℉(Fahrenheit) for the UPS
SBM = XXXXX XH(M)	Displays the stage of Smart Battery Management with Operation Time
Rating = XXK VA	Displays the UPS Rating
MCU Ver = XXXX	Displays the MCU Firmware Version
Model Name	Displays the UPS Model Name
Date & Time - - - - / - - / - - - - -:- -	Displays the present Date & Time
Next BATT Change XXX / XXXX	Displays the next Battery Change Date & Time
IP XXXXXX XXX.XXX.XXX.XXX	Display the network IP address
Subnet Mask XXX.XXX.XXX.XXX	Display the network Subnet Mask
Gateway XXX.XXX.XXX.XXX	Display the network Gateway
MAC XX-XX-XX-XX-XX-XX	Display the network card MAC address

Copyright © 2020 Cyber Power Systems, Inc.

LCD SETUP FUNCTIONS

LCD EVENT LOG

5 Event Logs of UPS can be recorded.

1. Press the "**ENTER**" button to activate the "**MAIN MENU**".
2. Press the "▲" and "▼" buttons to scroll to the "**Event Log**" option.
3. Press the "**ENTER**" button to select the "**Event Log**" submenu.
4. Press the "▲" and "▼" buttons to scroll through the "**Event Log**" submenu in the following table.
5. Press the "**ESC**" button to return to UPS Status.

Event Log Submenu	Description
(X)	XXDXXHXXM (without PowerPanel® Business or RMCARD) - - / - - - -:- - (with PowerPanel® Business or RMCARD) **Event Content**

MULTI-LANGUAGE INTERFACE

Users can configure 1 of the 4 available languages for display.

([**English**], [**Español-Spanish**], [**Français-French**], [**Deutsch-German**])

1. Press the "**ENTER**" button to activate the "**MAIN MENU**".
2. Press the "▲" and "▼" buttons to scroll to the "**Configure**" option.
3. Press the "**ENTER**" button to select the "**Configure**" submenu.
4. Press the "▲" and "▼" buttons to scroll through the "**Language**" options.
5. Press the "**ENTER**" button to select the "**Language**" submenu.
6. Press the "▲" and "▼" buttons to scroll to the language that you want to select.

   You may be prompted to save the selection, if so press the "**ENTER**" button to save the setting.
7. Press the "**ESC**" button to cancel or return to previous LCD menu.

LCD SETTINGS CONFIGURATION

There are 28 UPS settings that can be configured by the user.

1. Press the "**ENTER**" button to activate the "**MAIN MENU**".
2. Press the "▲" and "▼" buttons to scroll to the "**Configure**" option.
3. Press the "**ENTER**" button to select the "**Configure**" submenu.
4. Press the "▲" and "▼" buttons to scroll to the "**Configure**" submenu in the following table.
5. Press the "**ENTER**" button to select the setting you want to configure.

   The first configuration parameter will be displayed on the second column of LCD screen.
6. Press the "▲" and "▼" buttons to scroll through the different parameters.
7. Press the "**ENTER**" button to select the parameter you want to change.

   You may be prompted to save the selection, if so press the "**ENTER**" button to save the setting. Some options are saved and started automatically. (See the following table for additional details.)
8. Press the "**ESC**" button to cancel or return to the previous LCD menu.

Copyright © 2020 Cyber Power Systems, Inc.

LCD SETUP FUNCTIONS

Configure Submenu	Available Settings	Default Setting
Output Voltage	= [100V] [110V] [115V] [120V] [125V][1]	120V
	= [200V] [208V] [220V] [230V] [240V]	208V
Sync Freq Window	Range= [+/- 1%] [+/- 2%] [+/- 3%] [+/- 4%] [+/- 5%] [+/- 6%] [+/- 7%] [+/- 8%] [+/- 9%] [+/-10%]	+/- 5%
Bypass V Window	Range= [+10%/-10%] [+10%/-15%] [+10%/-20%] [+15%/-10%] [+15%/-15%] [+15%/-20%]	+10%/-15%
Bypass Condition	[Check Freq/Volt] [Check Volt Only] [No Bypass]	Check Freq/Volt
ECO Mode[2]	[Disable] [Enable]	Disable
	[V Range= +/-15%] [V Range= +/-10%] (for [Enable])	V Range= +/-10%
Manual Bypass	[Disable] [Enable]	Disable
UPS Diagnostic	[Battery Test] [Alarm Test] [Indicator Test] [Fan Test]	[Battery Test]
	[Activate?]	None
Audible Alarms	[Disable] [Enable]	Enable
EBM Number	= [0] [1] [2] [3] [4] [5] [6] [7] [8] [9] [10]	0
Wiring Fault: Not applicable on OL3000RTXL2UHV model	[Disable] [Enable]	Disable
NCL Control	[Outlet On] [Outlet Off]	Outlet On
Language	[English] [Español-Spanish] [Français-French] [Deutsch-German]	English
Generator Mode[3]	[Disable] [Enable]	Disable
Communication	[Disable] [Enable]	Enable
Dry Relay Set	[I/P Power Fail] [Battery Low] [Summary Alarm] [UPS On Bypass] [UPS Fail]	I/P Power Fail
Converter Mode[4]	[Converter Off] [O/P Freq = 50Hz] [O/P Freq = 60Hz]	Converter OFF
Screen Saver	[Disable] [1 Minutes] [5 Minutes]	5 minutes
Clear Event Log	[Activate?]	None
Button OFF LOCK	[Disable] [Enable]	Disable
Charger Function	[SBM] [Constant]	SBM
Signal Inputs	[Disable] [EPO] [ROO]	Disable
Charger Check	[Disable] [Enable]	Disable
Reset ReplaceBAT	[Activate?]	None
IP Address	[Mode:DHCP] [Mode:Manual]	Mode:DHCP
	[IP Address] [Subnet Mask] [Gateway] (for [Mode:Manual])	None
Reset LoadEnergy	[Activate?]	None
LowBat Capacity[5]	Threshold= [20%][25%] [30%][35%]……[55%][60%][65%]	20%
LowBat Runtime[5]	Threshold= [0min][1min][2min][3min]……[29min][30min]	5min
Period Battery Test	[Disable[6]][1 Weeks][2 Weeks] [3 Weeks] [4 Weeks]	Disable

Copyright © 2020 Cyber Power Systems, Inc.

[1] For OL1500/2200/3000RTXL2U, 100V is derated by 20%, 110/115V is derated by 10%
Output voltage default setting varies by country.
[2] This function can't be set when Manual Bypass, Generator Mode or Converter Mode is enabled.
[3] UPS has no bypass when Generator Mode is enabled.
[4] UPS has no bypass when Converter Mode is enabled. This function can only be set before the UPS is on.
[5] The Low Battery threshold setting will only affect the warning of Power Management Software (PowerPanel® Business) and RMCARD interface.
[6] If function is disabled, the Smart Battery Management (SBM) carries out battery tests when certain operating conditions are met.

SILENCING AUDIBLE ALARMS

1. Press any of four function buttons on the LCD module; Note: the alarm cannot be turned off for a "**Battery Low**" condition. This condition will still result in an audible alarm.
2. Change the '**Audible Alarms**' option to '**Disable**' in the LCD screen and it will no longer give an audible alarm for any malfunction.

MANUAL BATTERY TEST

Select '**Activate**' in the '**Battery Test**' portion of the LCD screen and the unit will perform a manual battery test.

GRAPHICAL LOAD/BATTERY CAPACITY DISPLAY

1. Press the "**ESC**" button to return to UPS Status.
2. Press the "▲" and "▼" buttons to scroll to the "**LOAD**" and "**BAT**" Capacity.
3. Press the "▲" and "▼" buttons to scroll to the "**Charging**" or "**Discharging**" Capacity.

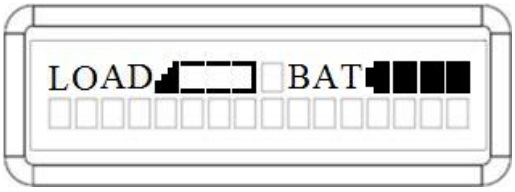

LOAD and **BAT** Capacity

The LCD screen displays the Load and Battery capacity with a graphical icon.

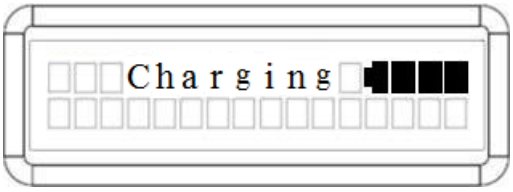

Charging Capacity

The LCD screen displays the battery capacity during charging with a graphical icon while on Line Mode.

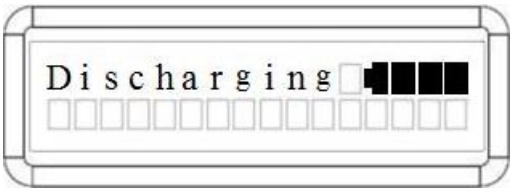

Discharging Capacity

The LCD screen displays the remaining battery capacity with a graphical icon while on Battery Mode.

Copyright © 2020 Cyber Power Systems, Inc.

LCD MODULE REMOTE CONTROL and WALL-MOUNTING INSTRUCTIONS

REMOTE CONTROL

Step 1: Remove the Multifunction LCD Control Panel
Unscrew the right panel of the UPS. Separate the right panel from the UPS. Gently lift the LCD module out. Reinstall the right panel.

Step 2: Connect the DB26 Cable
Connect a DB26 cable (not included) from LCD control panel to the "**Remote Control Port**" on the front panel as shown below

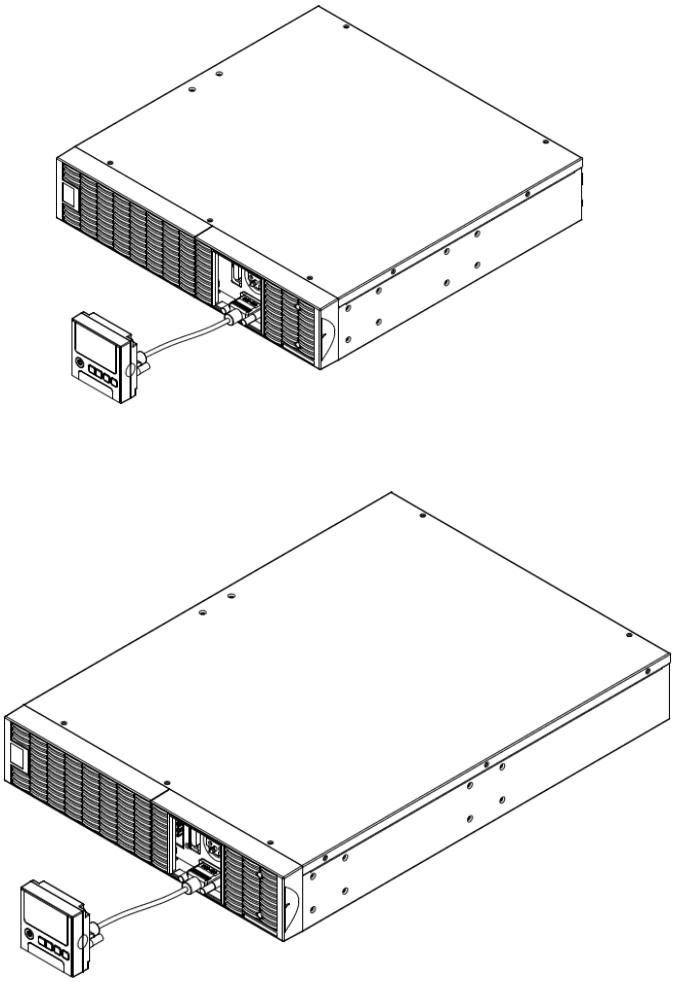

WALL-MOUNTING INSTRUCTIONS

Step 1: Remove the Multifunction LCD Control Panel
Unscrew the right panel of the UPS. Separate the right panel from the UPS. Gently lift the LCD Control Panel out. Reinstall the right panel.

Step 2: Rotate the DB26 Connector of LCD Control Panel

Step 3: Connect the DB26 Cable
Connect a DB26 cable (not included) from LCD Control Panel to the "**Remote Control Port**" on the front panel as shown in the following figure.

Step 4: Mount LCD Control Panel on the Wall

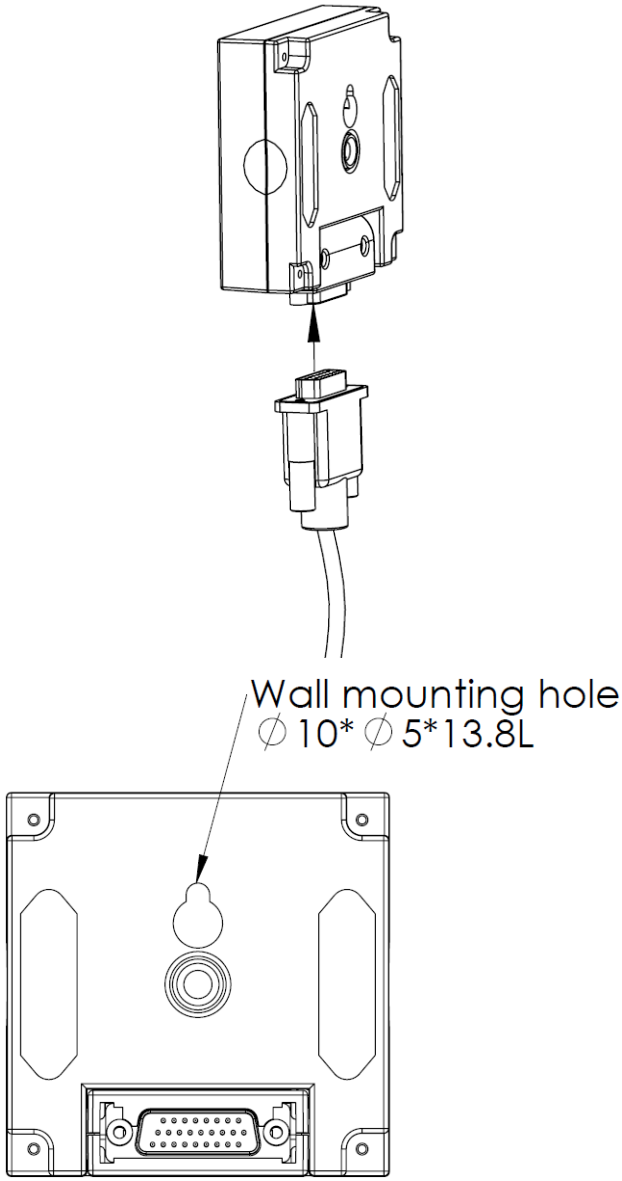

SAFETY PRECAUTIONS

CAUTION! It must be done by qualified personnel.

CAUTION! To avoid electric shock, turn off and unplug the unit before installing REMOTE CONTROL or WALL-MOUNTING INSTRUCTIONS.

Copyright © 2020 Cyber Power Systems, Inc.

MAINTENANCE

Storage

To store your UPS for an extended period, cover it and store with the battery fully charged. Recharge the battery every three months to ensure battery life.

Battery Replacement

Please read and follow the Safety Instructions before servicing the battery. Battery replacement should be performed by trained personnel who are familiar with the procedures and safety precautions. Make a note of the replacement Battery tray number.

Safety Precautions

CAUTION! Only use replacement batteries which are certified by Cyber Power Systems. Use of incorrect battery type is an electrical hazard that could lead to explosion, fire, electric shock, or short circuit.

CAUTION! Batteries contain an electrical charge that can cause severe burns. Before servicing batteries, please remove any conductive materials such as jewelry, chains, wrist watches, and rings.

CAUTION! Do not open or mutilate the batteries. Electrolyte fluid is harmful to the skin/eyes and may be toxic.

CAUTION! To avoid electric shock, turn off and unplug the UPS from the wall receptacle before servicing the battery.

CAUTION! Only use tools with insulated handles. Do not lay tools or metal parts on top of the UPS or battery terminals.

Replacement Batteries

Please refer to the front side of the UPS for the model number of the correct replacement batteries. For battery procurement, log onto www.cyberpowersystems.com, or contact your local dealer.

Battery Disposal

Batteries are considered hazardous waste and must be disposed of properly. Contact your local government for more information about proper disposal and recycling of batteries. Do not dispose of batteries in fire.

Cyber Power Systems encourages environmentally sound methods for disposal and recycling of its UPS products.

Please dispose and/or recycle your UPS and batteries in accordance with local regulations.

Battery Replacement

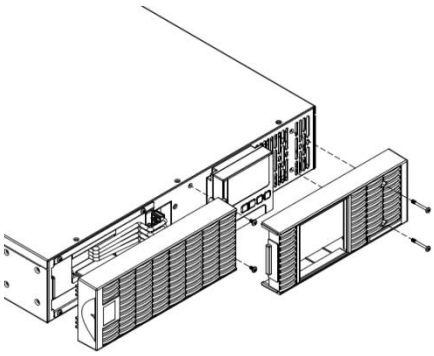

Step 1: Remove the front panels

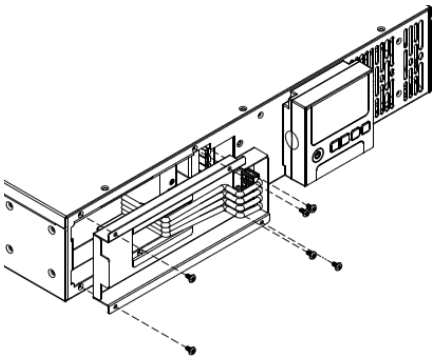

Step 2: Remove the retaining screws from the cable protection cover and then remove the cover itself

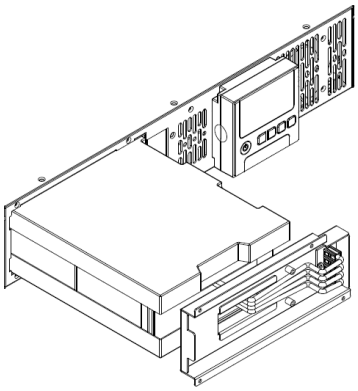

Step 3: Pull the battery tray out slowly and then put the new battery tray back into the compartment

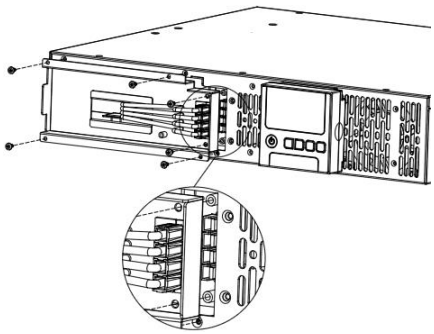

Step 4: Fasten back the connectors on the battery retaining cover. Then insert the battery connectors and tighten the screws of battery retaining cover

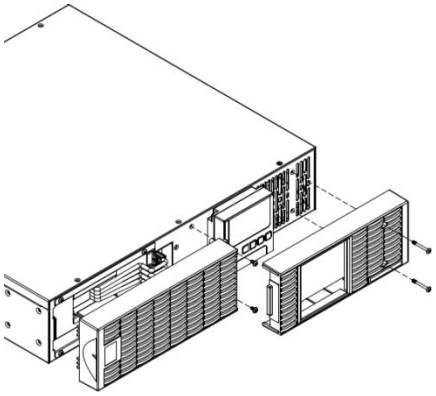

Step 5: Install the front panels. Execute a battery test via the LCD control panel, go to the Configuration Menu, then scroll to the UPS Diagnostic then select battery test and Activate, then scroll to ResetReplaceBAT to reset the battery replacement date. This operation can also be done via PowerPanel® Business Edition Agent or RMCARD web interface. Please see their respective User Manuals for detailed instructions.

Copyright © 2020 Cyber Power Systems, Inc.

TECHNICAL SPECIFICATIONS

Model	OL1000RTXL2U	OL1500RTXL2U	OL2200RTXL2U	OL3000RTXL2U	OL3000RTXL2UHV
Configuration					
Capacity (VA)	1000VA	1500VA	2200VA	3000VA	3000VA
Capacity (Watts)	900W	1350W	1800W	2700W	2700W
Form Factor	Rackmount / Tower				
Energy-saving Technology	Yes, ECO Mode Efficiency				
	≧94%	≧95%			≧97%
Input					
Input Power Plug	NEMA 5-15P		NEMA 5-20P	NEMA L5-30P	NEMA L6-20P
Input Voltage Range	100~125Vac				200~240Vac
Input Frequency Range	50 / 60Hz				
Input Power Factor	0.99				
Cold Start	Yes				
Output					
Output Waveform	Sine wave				
Output Voltage (Configurable)	100, 110, 115, 120, 125Vac ±2%[1]				200, 208, 220, 230, 240Vac ±2%
Output Frequency	50 / 60Hz (Auto-Sensing or Configurable) ±0.25Hz				
Transfer Time (Typical)	0ms				
Rated Power Factor	0.9	0.9	0.82	0.9	0.9
Harmonic Distortion	THD < 3% at Linear Load, < 5% at Non-linear Load				
Crest Factor	3 : 1				
ECO Mode Bypass Voltage Range	±10%, ±15% (Configurable)				
UPS Outlets	(8) NEMA 5-15R		(6) NEMA 5-20R, (1) L5-20R	(6) NEMA 5-20R, (1) L5-30R	(2) NEMA L6-20R, (1) NEMA L6-30R
Protection					
Surge Protection	IEC 61000-4-5 Level 3				
	1780 Joules		1335 Joules		445 Joules
Phone / Network Surge Protection	RJ11/RJ45 (One In/One Out)				
Overload Protection	Line Mode： 105~125% Load for 1 min, 126~150% Load for 10 sec Battery Mode： 105~130% Load for 10 sec, 131~150% Load for 2 sec				
Short Circuit Protection	UPS Output Cut off Immediately or Input Fuse / Circuit Breaker Protection				
Battery					
Specifications	(3) 12V/9AH		(6) 12V/9AH		
Recharge Time 0-90% (Typical)	4 hours (0~90%)				
Sealed, Maintenance Free	Yes				
Hot-Swappable	Yes				
Status Indicators					
LCD Screen	Multi-Function LCD Readout that Supports： Multi-Language Interface, (24) Types of Read Out, (28) Types of Function Setting, (5) Event Logs				
LED Indicators	Power On (White), Line Mode (Green), Battery Mode (Yellow), Bypass Mode (Yellow), Fault (Red), Replace Battery (Red)				
Audible Alarms	Battery Mode, Battery Low, Overload, UPS Fault				
Environment					
Operating Temperature	32°F to 104°F (0℃ to 40℃)				
Operating Relative Humidity	0 to 90% Non-Condensing				
Management					
On-Device Features	Start-up Self Test, Auto-Charge, Auto-Restart, Auto-Overload Recovery				
Connectivity Ports	(1) Serial Port (RS232), (1) USB Port, (1) Relay Out				
Expansion Slot	(1) Expansion Slot for optional remote management cards				
Software					
Power Management Software	PowerPanel® Business Edition				
Physical					
Dimensions	L x W x H = 16.9 x 17 x 3.5in. (43 x 43.3 x 8.8cm)		L x W x H = 23.6 x 17 x 3.5in. (60 x 43.3 x 8.8cm)		
Net Weight	39.6lbs(18Kg)		68.2lbs(31Kg)		
Certifications					
Safety	UL1778, CSA C22.2 NO.107.3, FCC Part 15 Class B		UL1778, CSA C22.2 NO.107.3, FCC Part 15 Class A		
Environmental	RoHS compliant				

[1] For OL1500/2200/3000RTXL2U, 100V is derated by 20%, 110/115V is derated by 10%

Copyright © 2020 Cyber Power Systems, Inc.

TROUBLE SHOOTING

Problem	Possible Cause	Solution
Warning		
O/P Overload	Your equipment requires more power than the UPS can provide. If the UPS is in Line Mode then it will transfer to Bypass Mode; if the UPS is in Battery Mode it will shutdown.	Shut off non-essential equipment. If this solves the overload problem, the UPS will transfer to normal operation.
Load Over XXX%	Your equipment requires more power than the setting in the Power Management Software (PowerPanel® Business) will allow.	Shut off the non-essential equipment or increase the level in the Power Management Software.
Battery Mode	UPS is operating on battery power.	Save your data and perform a controlled-shutdown.
Battery Low	UPS is operating on battery power and will be shutting down soon due to extremely low battery voltage.	UPS will restart automatically when acceptable utility power returns.
BAT Disconnected	Missing battery power.	Check battery connector and battery breaker.
Battery Failure	UPS has failed a Battery Test.	1. Check battery connector and battery breaker. 2. Contact technical support to replace the battery.
Replace Battery	Battery will soon need to be replaced due to insufficient runtime.	Contact technical support to replace the battery.
EPO OFF	Missing the EPO connection.	Check the EPO connection.
Wiring Fault* *Not applicable on OL3000RTXL2UHV model	Line and neutral wires are reversed.	Exchange line and neutral wires.
	Missing ground wire.	Connect ground wire.
	No ground wire.	Disable Wiring Fault alarm on LCD panel.
Line Abnormal	Wrong utility power backed up during UPS auto-restart.	Check whether voltage or frequency of utility power is out of range.
Output Short	Output short circuit.	Your attached equipment may have problems, please remove them and check again.
Over Temperature	High temperature sensor activates protection.	Check the fan for operation and if the ventilation hole has been covered.
Coldstart Lock	UPS is locked to prevent consuming battery power during shipping.	Plug into utility power for first-time operation.
Autorestart Lock	"Automatic Restore" is disabled in Power Management Software (PowerPanel® Business)	Press "ON/OFF" button to turn on UPS.
Replace Battery	Battery will need to be replaced soon due to insufficient runtime.	Install new batteries, execute battery test, and reset the replace battery date.
Service Battery	The Battery Replacement Date has reached the recommended 3 year maintenance period.	1. Perform a runtime calibration to verify battery capacity is sufficient and acceptable. 2. If batteries have been recently replaced, then reset the Battery Replacement Date using PowerPanel® Business Edition-Agent software, RMCARD interface (if installed) or through the LCD control panel on the UPS (see configuration menu on page 11).
Fault		
Over Charge	Battery is overcharged.	1. Remove battery connector and check charger voltage. 2. Contact CyberPower for repair.
Charger Failure	Charger has failed.	
High O/P V	Output voltage is too high.	1. Shut down UPS and turn off input breaker. 2. Contact CyberPower for repair.
Low O/P V	Output voltage is too low.	
Bus Fault	Internal DC bus voltage is too high or too low.	
Fan Error	Internal Fan has failed.	

Cyber Power Systems Inc.

www.cyberpowersystems.com

Entire contents copyright© 2020 Cyber Power Systems Inc., All rights reserved. Reproduction in whole or in part without permission is prohibited. PowerPanel® Business Edition and PowerPanel® Personal Edition are trademarks of Cyber Power Systems Inc.

Copyright © 2020 Cyber Power Systems, Inc.

PRODUCT REGISTRATION

CyberPower requests that you complete and return the Warranty Registration Card enclosed with the Product or register the Product at its website (www.cyberpowersystems.com/registration) to establish that you are the Initial Customer of the Product, and therefore entitled coverage under the Limited Warranty and the Connected Equipment Guarantee. (Registration is not required for coverage, but note: if you do not register your purchase, you will be required to provide proof of purchase.)

LIMITED WARRANTY AND CONNECTED EQUIPMENT GUARNTEE

Read the following terms and conditions carefully before using the CyberPower OL1000RTXL2U / OL1500RTXL2U / OL2200RTXL2U / OL3000RTXL2U / OL3000RTXL2UHV. By using the Product you consent to be bound by and become a party to the terms and conditions of this Limited Warranty and Connected Equipment Guarantee (together referred to as this "Warranty"). If you do not agree to the terms and conditions of this Warranty, you should return the Product for a full refund prior to using it.

Who is Providing this Warranty?

Cyber Power Systems (USA), Inc. ("CyberPower") provides this Limited Warranty.

What Does This Warranty Cover?

This warranty covers defects in materials and workmanship in the Product under normal use and conditions. It also covers equipment that was connected to the Product and damaged because of the failure of the Product.

What is the Period of Coverage?

This warranty covers the Product for three years and connected equipment for as long as you own the Product.

Who Is Covered?

This warranty only covers the original purchaser. Coverage ends if you sell or otherwise transfer the Product.

How Do You Get Warranty Service?

1. Before contacting CyberPower, identify Your Product model number, the Purchase Date, and each item of Connected Equipment.

2. Email us at tech@cpsww.com or Call us at (877) 297-6937.

3. If your product requires warranty service you must provide a copy of your dated purchase receipt or invoice.

How Do You Open A Connected Equipment Claim?

1. Call us at (877) 297-6937 or write to us at Cyber Power Systems (USA), Inc., 4241 12th Ave. E., STE 400, Shakopee, MN 55379, or send us an e-mail message at claims@cpsww.com for instructions, within 10 days of the occurrence.

2. When you contact CyberPower, identify the Product, the Purchase Date, and the item(s) of Connected Equipment. Have information on all applicable insurance or other resources of recovery/payment that are available to the Initial Customer and Request a Claim Number.

3. You must provide a dated purchase receipt (or other proof of the original purchase) for the Cyber Power unit and connected equipment. You also need to provide a description of the damage to your connected equipment.

4. Pack and ship the product to CyberPower and, if requested, the item(s) of Connected Equipment, a repair cost estimate for the damage to the Connected Equipment, and all claim forms that CyberPower provides to you. Show the Claim Number on the shipping label or include it with the product. **You must prepay all shipping costs, you are responsible for packaging and shipment, and you must pay the cost of the repair estimate.**

How Long Do I Have To Make A Claim?

All claims must be made within ten days of the occurrence.

What Will We Do To Correct Problems?

CyberPower will inspect and examine the Product.

If the Product is defective in material or workmanship, CyberPower will repair or replace it at CyberPower's expense, or, if CyberPower is unable to or decides not to repair or replace the Product (if defective) within a reasonable time, CyberPower will refund to you the full purchase price you paid for the Product (purchase receipt showing price paid is required).

If it appears that our Product failed to protect any equipment plugged into it, we will also send you forms for making your claim for the connected equipment. We will repair or replace the equipment that was damaged because of the failure of our Product or pay you the fair market value (NOT REPLACEMENT COST) of the equipment at of the time of the damage. We will use Orion Blue Book, or another a third-party valuation guide, or eBay, craigslist, or other source to establish that amount. Our maximum liability is limited to $400,000 for OL1000RTXL2U / OL1500RTXL2U / OL2200RTXL2U / OL3000RTXL2U / OL3000RTXL2UHV.

Copyright © 2020 Cyber Power Systems, Inc.

Who Pays For Shipping?

We pay when we send items to you; you pay when you send items to us.

What Are Some Examples Of What This Warranty Does Not Cover?

1. This Warranty does not cover any software that was damaged or needs to be replaced due to the failure of the Product or any data that is lost as a result of the failure or the restoration of data or records, or the reinstallation of software.

2. This Warranty does not cover or apply to: misuse, modification, operation or storage outside environmental limits of the Product or the equipment connected to it, nor for damage while in transit or in storage, nor if there has been improper operation or maintenance, or use with items not designed or intended for use with the Product, such as laser printers, appliances, aquariums, medical or life support devices, etc.

What Other Limitations Apply?

The sole and exclusive remedies of the Initial Customer are those provided by this Warranty.

1. This Warranty does not apply unless the Product and the equipment that was connected to it were connected to properly wired and grounded outlets (including compliance with electrical and safety codes of the most current electrical code), without the use of any adapters or other connectors.

2. The Product must have been plugged directly into the power source and the equipment connected to the Product must be directly connected to the Product and not “daisy-chained” together in serial fashion with any extension cords, another Product or device similar to the Product, surge suppressor, or power tap. Any such installation voids the Limited Warranty.

3. The Product and equipment connected to it must have been used properly in a suitable and proper environment and in conformance with any license, instruction manual, or warnings provided with the Product and the equipment connected to it.

4. The Product must have been used at all times within the limitations on the Product’s VA capacity.

The Product was designed to eliminate disrupting and damaging effects of momentary (less than 1ms) voltage spikes or impulses from lightning or other power transients. If it can be shown that a voltage spike lasting longer than 1ms has occurred, the occurrence will be deemed outside the rated capabilities of the Product and the Limited Warranty is void. CyberPower Does Not Cover or Undertake Any Liability in Any Event for Any of the Following:

1. Loss of or damage to data, records, or software or the restoration of data or records, or the reinstallation of software.

2. Damage from causes other than AC Power Line Transients, spikes, or surges on properly installed, grounded and code-compliant 120 volt power lines in the United States and Canada; transients, surges or spikes on standard telephone land lines, PBX telephone equipment lines or Base 10T Ethernet lines, when properly installed and connected. (This exclusion applies, for example, to fluctuations in data transmission or reception, by CATV or RF transmission or fluctuations, or by transients in such transmission.)

3. Damage from any circumstance described as excluded above with respect to the Product.

4. Damages from fire, flood, wind, rain, rising water, leakage or breakage of plumbing, abuse, misuse or alteration of either the product or the Connected Equipment.

5. CyberPower excludes any liability for personal injury under the Limited Warranty and Connected Equipment Guarantee. CyberPower excludes any liability for direct, indirect, special, incidental or consequential damages, whether for damage to or loss of property [EXCEPT FOR (AND ONLY FOR) the specific limited agreement of CyberPower to provide certain warranty benefits regarding "Connected Equipment" under this Warranty], loss of profits, business interruption, or loss of information or data. NOTE: Some States or Provinces do not allow the exclusion or limitation of incidental or consequential damages, so the above limitation may not apply to you.

6. The Product is not for use in high-risk activities or with aquariums. The Product is not designed or intended for use in hazardous environments requiring fail-safe performance, or for use in any circumstance in which the failure of the Product could lead directly to death, personal injury, or severe physical or property damage, or that would affect operation or safety of any medical or life support device (collectively, "High Risk Activities"). CyberPower expressly disclaims any express or implied warranty of fitness for High Risk Activities or with aquariums. CyberPower does not authorize use of any Product in any High Risk Activities or with Aquariums. **ANY SUCH USE IS IMPROPER AND IS A MISUSE OF THE PRODUCT.**

Where Can I Get More Information?

The application of the United Nations Convention of Contracts for the International Sale of Goods is expressly excluded.

CyberPower is the warrantor under this Limited Warranty.

For further information please feel free to contact CyberPower at Cyber Power Systems (USA), Inc. 4241 12th Ave E., STE 400, Shakopee, MN 55379; call us at (877) 297-6937; or send us an e-mail message at claims@cpsww.com.

Copyright © 2020 Cyber Power Systems, Inc.

CONFORMANCE APPROVALS

FCC Notice

This device complies with part 15 of the FCC Rules. Operation is subject to the following two conditions: (1) This device may not cause harmful interference, and (2) this device must accept any interference that may cause undesired operation.

For 2200 and 3000VA Online UPS Models:

WARNING!! This equipment has been tested and found to comply with the limits for a Class A digital device, pursuant to part 15 of the FCC Rules. These limits are designed to provide reasonable protection against harmful interference when the equipment is operated in a commercial environment. This equipment generates, uses, and can radiate radio frequency energy and, if not installed and used in accordance with the instruction manual, may cause harmful interference to radio communications. Operation of this equipment in a residential area is likely to cause harmful interference in which case the user will be required to correct the interference at his own expense. Shielded signal cables must be used with this product to ensure compliance with the Class A FCC limits.

The Class A digital apparatus meets all requirements of the Canadian Interference-Causing Equipment Regulation.

Cet appareil numerique de la class A respecte toutes les exigencies du Reglement sur le materiel brouilleur du Canada.

For 1000 and 1500VA Online UPS Models:

WARNING!! This equipment has been tested and found to comply with the limits for a Class B Digital Device, pursuant to Part 15 of the FCC Rules. These limits are designed to provide reasonable protection against harmful interference in residential installation. This equipment generates, uses and can radiate radio frequency energy and, if not installed and used in accordance with the instructions, may cause harmful interference to radio communications. However, there is no guarantee that interference will not occur in a particular installation. If this equipment does cause harmful interference to radio or television reception, which can be determined by turning the equipment off and on, the user is encouraged to try to correct the interference by one or more of the following measures: (1) Reorient or relocate the receiving antenna. (2) Increase the separation between the equipment and receiver. (3) Connect the equipment into an outlet on a circuit different from that to which the receiver is connected. (4) Consult the dealer or an experienced radio/TV technician for help. Any special accessories needed for compliance must be specified in the instruction.

The Class B digital apparatus meets all requirements of the Canadian Interference-Causing Equipment Regulation.

Cet appareil numerique de la class B respecte toutes les exigencies du Reglement sur le materiel brouilleur du Canada

This document is believed to be accurate, but CyberPower reserves the right to change or correct the contents and does not assume any responsibility for omissions or errors.

Need Additional Help?

Feel free to contact our Tech Support department with installation, troubleshooting, or general product questions.

CyberPower Technical Support

Phone: 1-877-297-6937

Email: tech@cpsww.com

Web: www.cyberpowersystems.com

Address: 4241 12th Avenue E, Suite 400 Shakopee, MN 55379, USA

Hours of Operation:

Monday – Friday, 7:00am – 6:00pm (CST)

Entire contents copyright © 2020 Cyber Power Systems, Inc.

All rights reserved. Reproduction in whole or in part without permission is prohibited.

Copyright © 2020 Cyber Power Systems, Inc.