Operating instructions

Refrigerator

Read the operating instructions before switching on for the first time

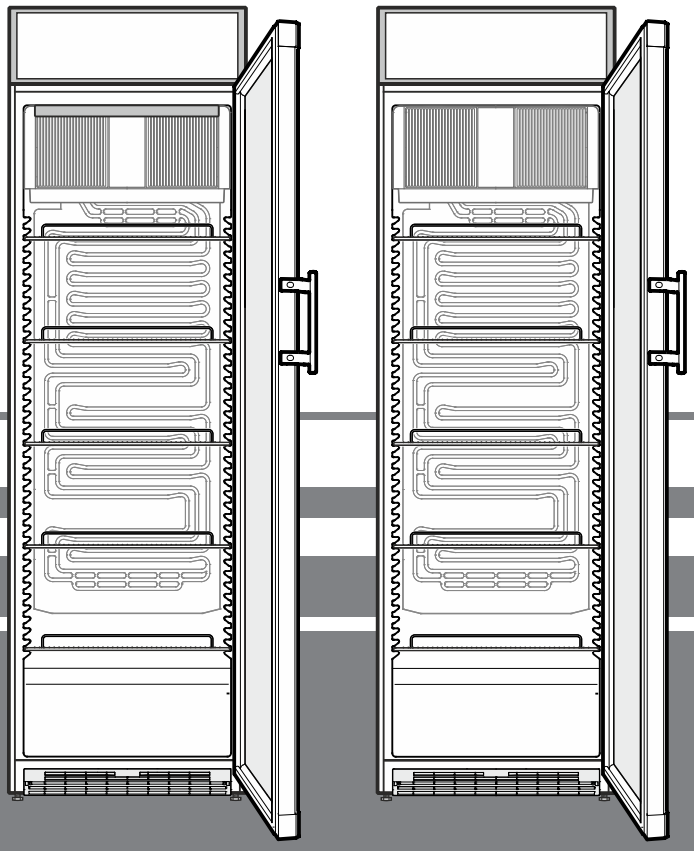

7085 693-01

FKDv 4203, FKDv 4213

LIEBHERR

Disposal notes

The appliance contains reusable materials and should be disposed of properly - not simply with unsorted household refuse. Appliances which are no longer needed must be disposed of in a professional and appropriate way, in accordance with the current local regulations and laws.

When disposing of the appliance, ensure that the refrigerant circuit is not damaged to prevent uncontrolled escape of the refrigerant it contains (data on type plate) and oil.

- Disable the appliance.
- Pull out the mains plug.
- Cut through the connection cable.

⚠ WARNING

Danger of suffocation due to packing material and plastic film!

Do not allow children to play with packaging material.

Take the packaging material to an official collection point.

Range of appliance use

The appliance is suitable solely for cooling food in a domestic environment or similar.

This includes, for example, use

- in staff kitchenettes, bed and breakfast establishments,
- by guests in cottages, hotels, motels and other forms of accommodation,
- in catering and similar services in the wholesale trade.

Use the appliance solely as is customary within a domestic environment. All other types of use are inadmissible.

The appliance is not suitable for storing and cooling medicines, blood plasma, laboratory preparations or similar substances and products covered by the 2007/47/EC Medical Devices Directive. Any misuse of the appliance may result in damage to or spoilage of stored goods.

Furthermore, the appliance is not suitable for operation in potentially explosive atmospheres.

Description of the appliance

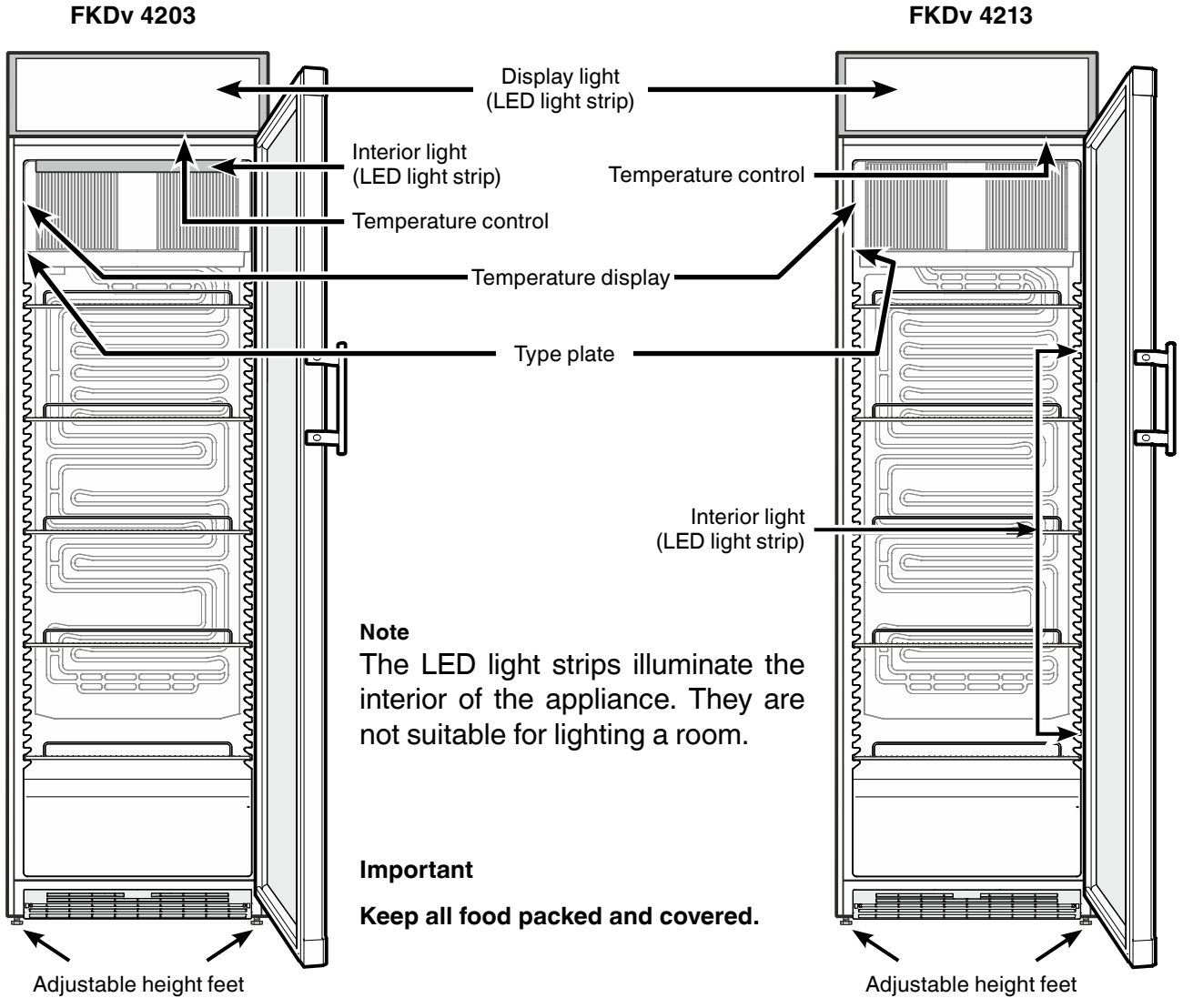

Note

The LED light strips illuminate the interior of the appliance. They are not suitable for lighting a room.

Important

Keep all food packed and covered.

Safety instructions and warnings

- To prevent injury or damage to the unit, the appliance should be unpacked and set up by two people.
- In the event that the appliance is damaged on delivery, contact the supplier immediately before connecting to the mains.
- To guarantee safe operation, ensure that the appliance is set up and connected as described in these operating instructions.
- Disconnect the appliance from the mains if any fault occurs. Pull out the plug, switch off or remove the fuse.
- When disconnecting the appliance, pull on the plug, not on the cable.
- Any repairs and work on the appliance should only be carried out by the customer service department, as unauthorised work could prove highly dangerous for the user. The same applies to changing the mains power cable.
- Do not allow naked flames or ignition sources to enter the appliance. When transporting and cleaning the appliance ensure that the refrigerant circuit is not damaged. In the event of damage, make sure that there are no ignition sources nearby and keep the room well ventilated.
- Do not stand on the plinth, drawers or doors or use them to support anything else.
- This appliance can be used by children of 8 years old and over, and also by persons with restricted physical, sensory or mental capacity or lack of experience and knowledge, if they are supervised or have been instructed on safe use of the appliance and understand the resulting risks. Children must not be allowed to play with the appliance. Cleaning and user maintenance must not be carried out by children without supervision.
- Avoid prolonged skin contact with cold surfaces or chilled/frozen food. This could cause pain, numbness and frostbite. In the case of prolonged skin contact, protective measures should be taken, e.g. gloves should be worn.
- Do not consume food which has been stored for too long, as it could cause food poisoning.
- Do not store explosives or sprays using combustible propellants such as butane, propane, pentane etc. in the appliance. Electrical components might cause leaking gas to ignite. You may identify such sprays by the printed contents or a flame symbol.
- Do not use electrical appliances inside the appliance.
- If you have a lockable appliance, do not keep the key near the appliance or within reach of children.
- The appliance is designed for use in enclosed areas. Do not operate the appliance outdoors or in areas where it is exposed to splash water or damp conditions.
- When transporting or operating the appliance at an altitude of more than 1500 m above sea level, the glass pane in the door can break due to the reduction in air pressure. Broken fragments are sharp-edged and can cause serious injury.

Climate rating

The climate rating indicates the room temperature at which the appliance may be operated in order to achieve full refrigeration performance.

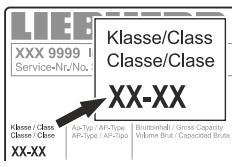

The climate rating is indicated on the type plate.

The position of the type plate is shown in the section entitled **Description of the appliance**.

Climate rating	Room temperature
SN	+10°C to +32°C
N	+16°C to +32°C
ST	+16°C to +38°C
SN-ST	+10°C to +38°C
T	+16°C to +43°C
SN-T	+10°C to +43°C

Do not operate the appliance outside the specified room temperature range.

Noise emissions from the appliance

The noise level while the appliance is operating is below 70 dB(A) (relative noise level 1 pW).

Setting up

- Do not place the appliance in direct sunlight or near cookers, radiators and similar sources of heat.
- The floor on which the appliance stands should be horizontal and level. Compensate for uneven floors with the adjustable feet.
- There must be a gap of at least 20 cm between the upper edge of the appliance and the ceiling.
- Do not cover ventilation openings or grille. →
- Standard EN 378 specifies that the room in which you install your appliance must have a volume of 1 m^3 per 8 g of R 600a refrigerant used in the appliance, so as to avoid the formation of inflammable gas/air mixtures in the room where the appliance is located in the event of a leak in the refrigerant circuit. The quantity of refrigerant used in your appliance is indicated on the type plate on the inside of the appliance.
- Always install the appliance directly against the wall.

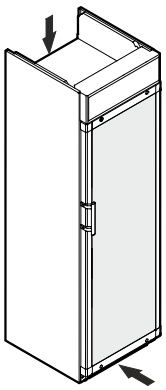

Remove transport lock

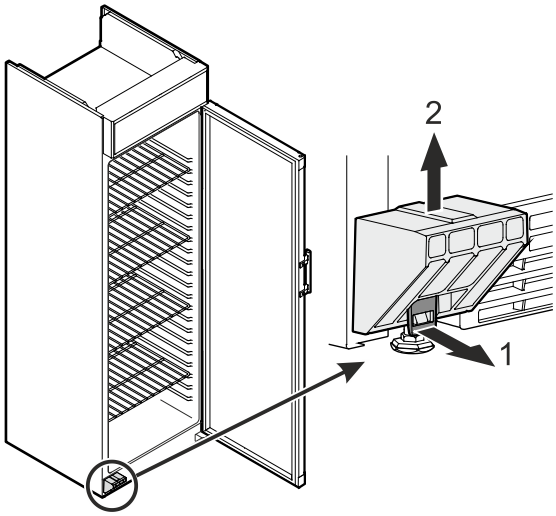

Appliance dimensions

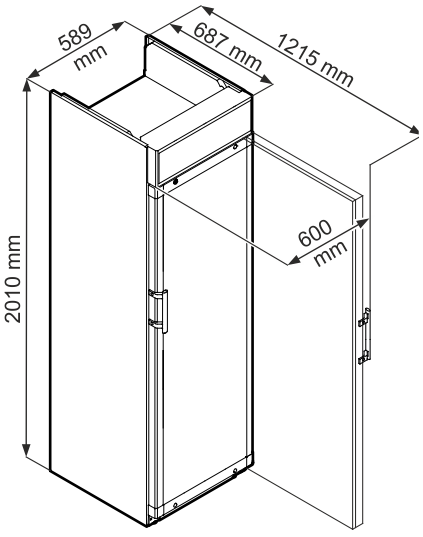

Electrical connection

Only operate the appliance with **alternating current (AC)**.

The permissible voltage and frequency are indicated on the type plate. The position of the type plate is shown in the section entitled **Description of the appliance**.

The socket must be properly earthed and protected by a fuse.

The tripping current of the fuse must be between 10 A and 16 A.

The socket must not be situated behind the appliance and must be easily accessible.

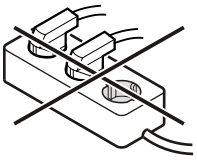

Do not connect the appliance using an extension cable or extension socket.

Do not use stand-alone inverters (conversion of direct current to alternating current/three-phase current) or energy-saving plugs. Risk of damage to the electronic control system!

Switching the appliance on and off

You are recommended to clean the interior of the appliance before switching it on for the first time (see **Cleaning**).

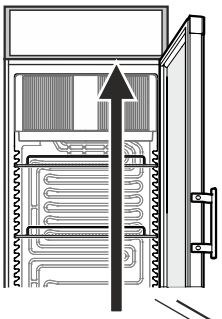

Switching the appliance on

Connect the appliance to the mains - the appliance is switched on.

Switching the appliance off

Pull out the mains plug or set the temperature control to **0** . →

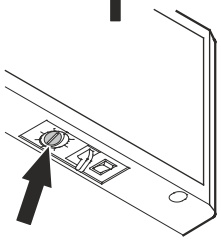

Important

When the temperature control is turned to "0", the refrigeration system is switched off, but the appliance is not completely disconnected from the mains.

Before cleaning, always disconnect the appliance from the mains. Remove the plug.

Setting the temperature

Set the temperature inside the appliance using the temperature control.

When the control is turned to **max.** , the temperature inside the appliance is at its lowest.

Set the control between **0** and **max.** as required.

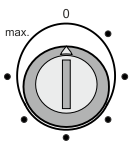

Cooling

The grid shelves can be moved to accommodate different height bottles or packages.

The ventilation slots on the inside must not be covered!

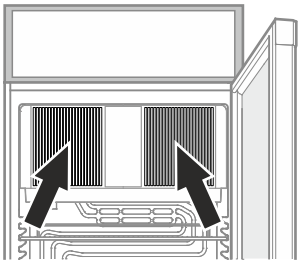

Interior light
Display light

It can be switched on and off by pressing the switch (**S**).

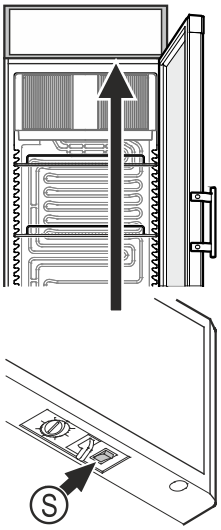

The light intensity of the LED light corresponds to laser class 1/1M.

⚠ Important

The light cover may only be removed by customer service staff. If the cover is removed, do not look directly at the light through optical lenses from close distance. This can damage your eyes.

Safety lock

The lock in the appliance door is equipped with a safety mechanism.

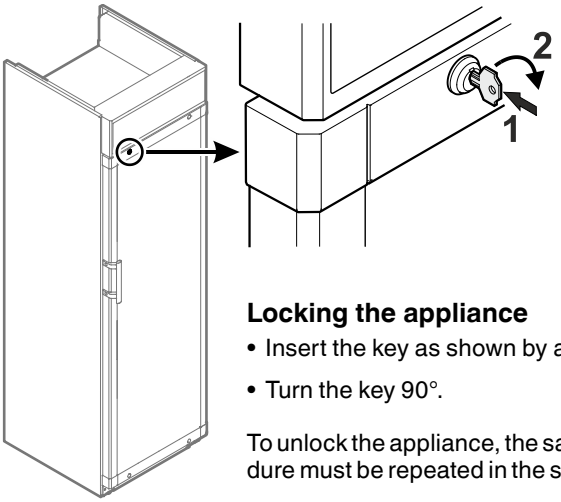

Locking the appliance

- Insert the key as shown by arrow **1**.
- Turn the key 90°.

To unlock the appliance, the same procedure must be repeated in the same order.

Defrosting

The refrigerator compartment defrosts automatically.

When operating at a very cold thermostat setting, the interior rear wall may ice up.

In this case, the appliance must be defrosted manually.

• Pull out the mains plug!

- Remove the food from the appliance and store in a cool place.
- Leave the door of the appliance open while defrosting. After defrosting mop up the remaining water and clean the appliance.

Do not use any mechanical devices or other artificial aids for defrosting other than those recommended by the manufacturer.

Cleaning

Clean the appliance at least twice per year.

Before cleaning always switch off the appliance. Pull out the mains plug or switch off or unscrew the fuse.

- Clean the inside, equipment and outer walls with lukewarm water and a little detergent. Do not use abrasive or acid cleaners or chemical solvents.
- Ensure that no cleaning water penetrates into the electrical components or ventilation grille.
- The dust should be removed from the refrigeration unit and heat exchanger - metal grid at the back of the appliance - once a year.
- Do not damage or remove the type plate on the inside of the appliance. It is very important for servicing purposes.

Do not use steam cleaners because of the risk of injury and damage.

Shutting your appliance down

If your appliance is to be shut down for any length of time, switch it off and disconnect the plug or switch off or unscrew the fuse.

Clean the appliance and leave the door open in order to prevent unpleasant smells.

The permissible room temperature for storing the appliance after decommissioning is between -10°C and +50°C.

Storing the appliance outside this temperature range can damage the appliance and cause it to malfunction.

The appliance complies with the relevant safety regulations and EU Directives 2014/30/EU and 2014/35/EU.

Malfunctions

You may be able to rectify the following faults by checking the possible causes yourself:

- **Appliance does not function:**

– Is the appliance switched on?

– Is the plug correctly fitted in the mains socket?

– Is the fuse intact?

- **Loud running noise:**

– Is the appliance set up firmly on the floor?

– Does the appliance cause nearby items of furniture or objects to vibrate? Please note that noises caused by the refrigerant circuit cannot be avoided.

- **The temperature is not low enough:**

– Is the temperature setting correct (see "Setting the temperature")?

– Have excessive amounts of fresh food been placed in the appliance?

– Does the separately installed thermometer show the correct reading?

– Is the ventilation system working properly?

– Is the appliance set up too close to a heat source?

If none of the above causes apply and you cannot rectify the fault yourself, contact the nearest customer service department stating the type designation ①, service number ② and appliance number ③ as indicated on the type plate.

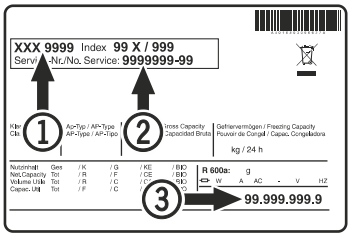

The position of the type plate is shown in the section entitled **Description of the appliance**.

Changing over door hinges

Door hinges should only be changed by a trained expert.

Changing the door hinges must be done by two people.

Important

The door must now be held secure by somebody.

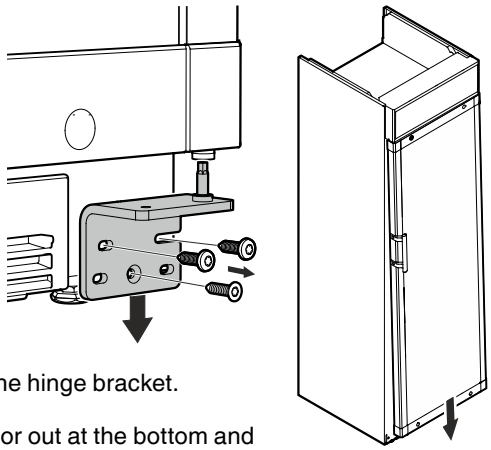

1.

Unscrew the hinge bracket.

Pull the door out at the bottom and lift off.

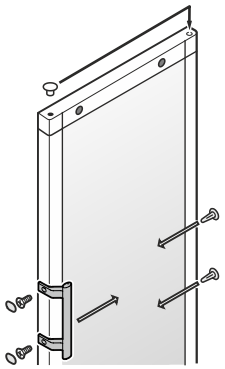

2.

Transfer door handle and plugs to the other side.

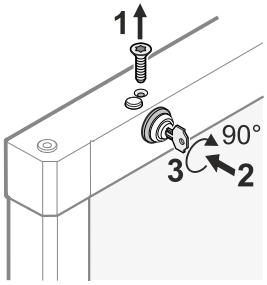

3.

Remove screw.

Insert key.

Turn key 90°.

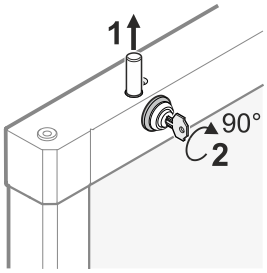

4.

Remove pin.

Turn lock.

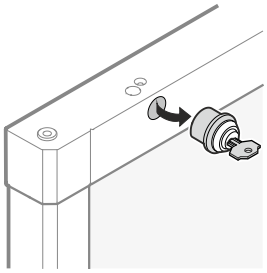

5.

Remove lock.

6.
Transfer covers to the opposite side.

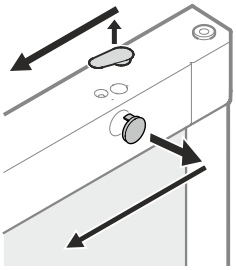

7.
Insert key.

Turn key 90°.

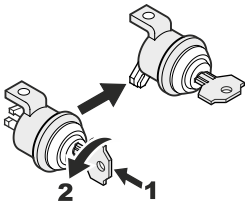

8.
Remove door latch, turn over and re-assemble.

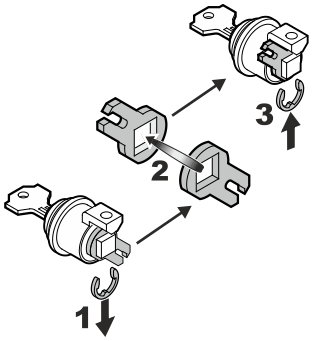

9.
Insert lock.

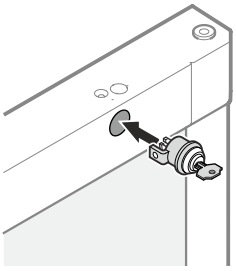

10.
Turn lock.

Insert pin.

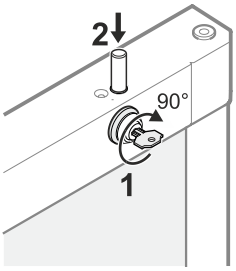

11.
Insert key.

Turn key 90°.

Insert screw.

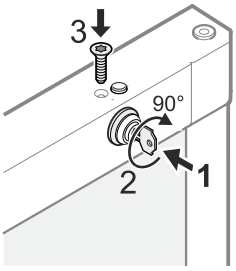

12.
Transfer hinge pin to the opposite side.

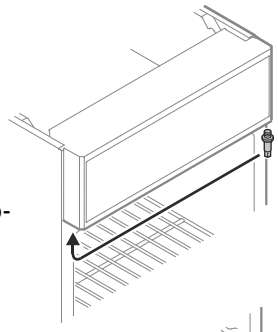

13.
Transfer cover plate to the opposite side.

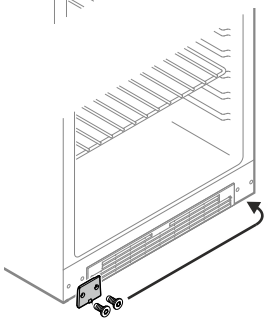

14.
Transfer pin on hinge bracket to the opposite side.

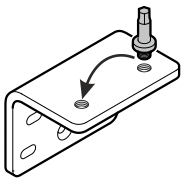

15.
Mount door on hinge pin and close.

Important
The door must now be held secure by somebody.

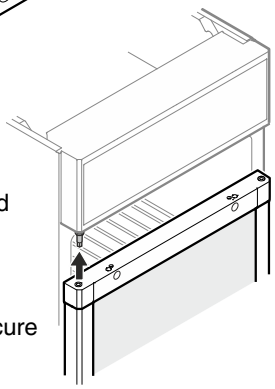

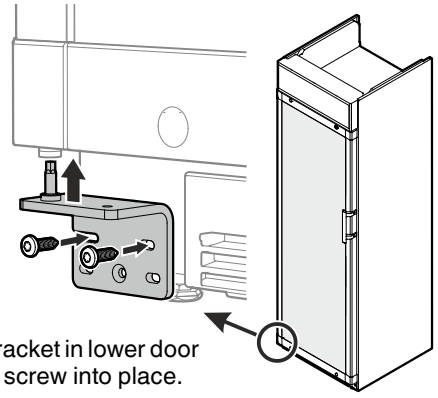

16.
Insert hinge bracket in lower door mounting and screw into place.

If the door is at an angle, adjust the angle.

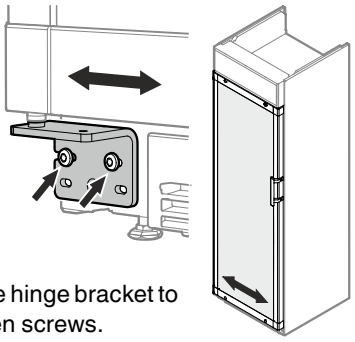

17.
Undo screws and slide hinge bracket to the right or left. Tighten screws.