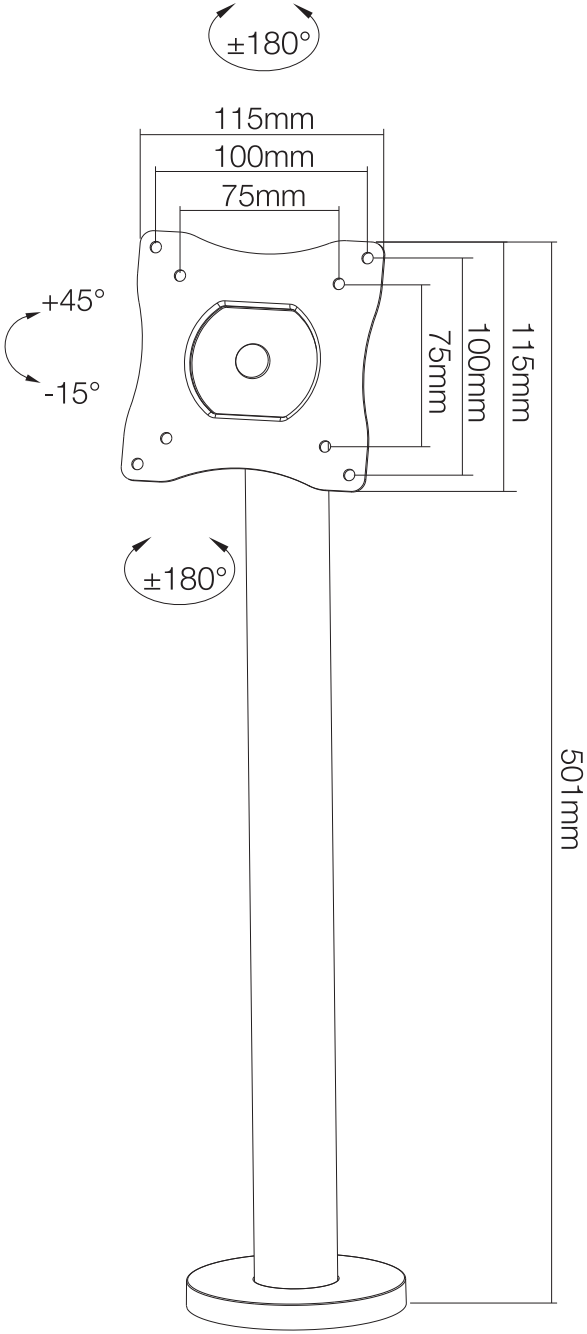
±180°
115mm
100mm
75mm
+45°
-15°
115mm
100mm
75mm
±180°
501mm