EW6F5922EF



EN Washing Machine

User Manual

Electrolux

CONTENTS

1. SAFETY INFORMATION....3
2. SAFETY INSTRUCTIONS....4
3. INSTALLATION....6
4. ACCESSORIES....9
5. PRODUCT DESCRIPTION....10
6. CONTROL PANEL....11
7. DIAL AND BUTTONS....12
8. PROGRAMMES....14
9. SETTINGS....18
10. BEFORE FIRST USE....19
11. DAILY USE....19
12. HINTS AND TIPS....23
13. CARE AND CLEANING....24
14. TROUBLESHOOTING....27
15. CONSUMPTION VALUES....30
16. TECHNICAL DATA....31
17. QUICK GUIDE....31
18. PRODUCT INFORMATION SHEET IN REFERENCE TO E.U. REGULATION 1369/2017....33

WE'RE THINKING OF YOU

Thank you for purchasing an Electrolux appliance. You've chosen a product that brings with it decades of professional experience and innovation. Ingenious and stylish, it has been designed with you in mind. So whenever you use it, you can be safe in the knowledge that you'll get great results every time.
Welcome to Electrolux.
Visit our website for:



Get usage advice, brochures, trouble shooter, service information:
www.electrolux.com/webselfservice



Register your product for better service:
www.registerelectrolux.com



Buy Accessories, Consumables and Original spare parts for your appliance:
www.electrolux.com/shop

CUSTOMER CARE AND SERVICE

Always use original spare parts.
When contacting our Authorised Service Centre, ensure that you have the following data available: Model, PNC, Serial Number.
The information can be found on the rating plate.

⚠ Warning / Caution-Safety information

ⓘ General information and tips

Environmental information

Subject to change without notice.

1. ⚠ SAFETY INFORMATION

Before the installation and use of the appliance, carefully read the supplied instructions. The manufacturer is not responsible for any injuries or damages that are the result of incorrect installation or usage. Always keep the instructions in a safe and accessible location for future reference.

1.1 Children and vulnerable people safety

- This appliance can be used by children aged from 8 years and above and persons with reduced physical, sensory or mental capabilities or lack of experience and knowledge if they have been given supervision or instruction concerning the use of the appliance in a safe way and understand the hazards involved.
- Children between 3 and 8 years of age and persons with very extensive and complex disabilities shall be kept away unless continuously supervised.
- Children of less than 3 years of age should be kept away unless continuously supervised.
- Do not let children play with the appliance.
- Keep all packaging away from children and dispose of it appropriately.
- Keep detergents away from children.
- Keep children and pets away from the appliance when the door is open.
- If the appliance has a child safety device, it should be activated.
- Children shall not carry out cleaning and user maintenance of the appliance without supervision.

1.2 General Safety

- Do not change the specification of this appliance.
- This appliance is intended to be used in household and similar applications such as:

  - staff kitchen areas in shops, offices and other working environments;
  - by clients in hotels, motels, bed & breakfast and other residential type environments;
  - areas for communal use in blocks of flats or in launderettes.
- Do not exceed the maximum load of 9 kg (refer to the "Programme chart" chapter).
- The operating water pressure at the water entry point from the outlet connection must be between 0.5 bar (0.05 MPa) and 8 bar (0.8 MPa).
- The ventilation opening in the base must not be covered by a carpet, mat, or any floor covering.
- The appliance must be connected to the water mains using the new supplied hose sets, or other new hose sets supplied by the Authorised Service Centre.
- Old hose sets must not be reused.
- If the mains power supply cable is damaged, it must be replaced by the manufacturer, its Authorised Service Centre or similarly qualified persons to avoid an electrical hazard.
- Before any maintenance operation, deactivate the appliance and disconnect the mains plug from the socket.
- Do not use high pressure water sprays and/or steam to clean the appliance.
- Clean the appliance with a moist cloth. Use only neutral detergents. Do not use abrasive products, abrasive cleaning pads, solvents or metal objects.

2. SAFETY INSTRUCTIONS

2.1 Installation

The installation must comply with relevant national regulations.

- Remove all the packaging and the transit bolts including rubber bush with plastic spacer.
- Keep the transit bolts in a safe place. If the appliance is to be moved in the future they must be reattached to lock the drum to prevent an internal damage.
- Always take care when moving the appliance as it is heavy. Always use safety gloves and enclosed footwear.

- Do not install or use a damaged appliance.
- Follow the installation instructions supplied with the appliance.
- Do not install or use the appliance where the temperature can be less than 0°C or where it is exposed to the weather.
- The floor area on which the appliance is to be installed must be flat, stable, heat resistant and clean.
- Make sure that there is air circulation between the appliance and the floor.
- When the appliance is in its permanent position, check if it is levelled correctly with the aid of a spirit level. If it is not, adjust the feet accordingly.
- Do not install the appliance directly above a floor drain.
- Do not spray water on the appliance and do not expose it to excessive humidity.
- Do not install the appliance where the appliance door cannot be fully opened.
- Do not put a closed container to collect possible water leakage under the appliance. Contact the Authorised Service Centre to ensure which accessories can be used.

2.2 Electrical connection



WARNING!
Risk of fire and electric shock.

- The appliance must be earthed.
- Always use a correctly installed shockproof socket.
- Make sure that the parameters on the rating plate are compatible with the electrical ratings of the mains power supply.
- Do not use multi-plug adapters and extension cables.
- Make sure not to cause damage to the mains plug and to the mains cable. Should the mains cable need to be replaced, this must be carried out by our Authorised Service Centre.
- Connect the mains plug to the mains socket only at the end of the installation. Make sure that there is access to the mains plug after the installation.
- Do not touch the mains cable or the mains plug with wet hands.
- Do not pull the mains cable to disconnect the appliance. Always pull the mains plug.
- This appliance complies with the E.E.C. Directives.

2.3 Water connection

- Do not cause damage to the water hoses.
- Before connection to new pipes, pipes not used for a long time, where repair work has been carried out or new devices fitted (water meters, etc.), let the water flow until it is clean and clear.
- Ensure that there are no visible water leaks during and after the first use of the appliance.
- Do not use an extension hose if the inlet hose is too short. Contact the Authorised Service Centre for the replacement of the inlet hose.
- It is possible to see water flowing from the drain hose. This is due to the testing of the appliance with the use of water in the factory.
- You can extend the drain hose to maximum 400 cm. Contact the Authorised Service Centre for the other drain hose and the extension.

2.4 Use



WARNING!
Risk of injury, electric shock, fire, burns or damage to the appliance.

- Follow the safety instructions on the detergent packaging.
- Do not put flammable products or items that are wet with flammable products in, near or on the appliance.
- Make sure that all metal objects are removed from the laundry.
- Do not wash fabrics which are heavily soiled with oil, grease or other greasy substances. It can damage rubber parts of the washing machine. Prewash such fabrics by hand before

loading them into the washing machine.
- Do not touch the glass door while a programme is in operation. The glass can get hot.

2.5 Service

- To repair the appliance contact an Authorised Service Centre.
- Use original spare parts only.

2.6 Disposal

WARNING!
Risk of injury or suffocation.

- Disconnect the appliance from the mains electrical and water supplies.
- Cut off the mains electrical cable close to the appliance and dispose of it.
- Remove the door catch to prevent children or pets from becoming trapped in the drum.
- Dispose of the appliance in accordance with local requirements for the disposal of Waste Electrical and Electronic Equipment (WEEE).

3. INSTALLATION

WARNING!
Refer to Safety chapters.

3.1 Unpacking

1. Remove the external film. If necessary, use a cutter.

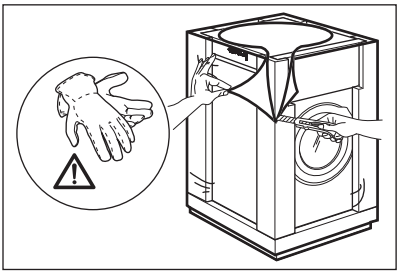

2. Remove the cardboard top and the polystyrene packaging materials.

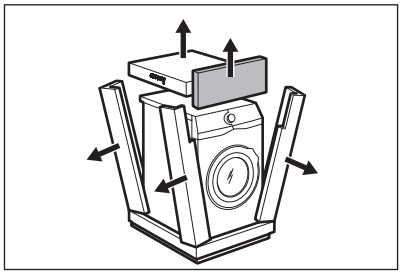

3. Open the door. Remove all the items from the drum .

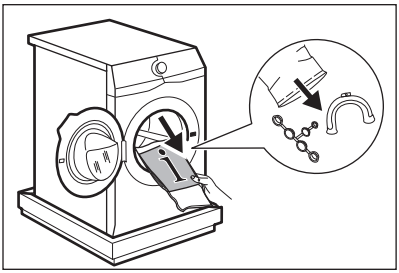

4. Put the front polystyrene packaging element on the floor under the appliance. Carefully put down the appliance onto its rear side.

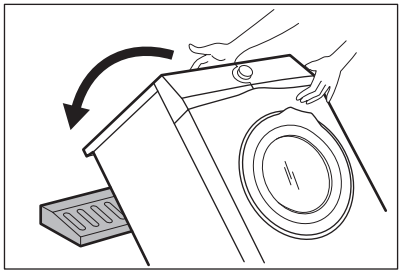

5. Remove the polystyrene protection from the bottom. Put the appliance back into an upright position.

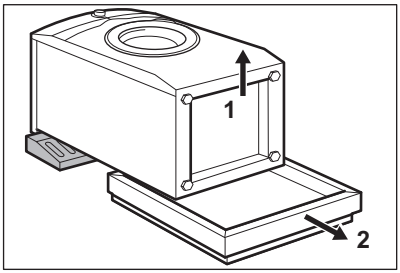

7. Remove the three transit bolts and pull out the plastic spacers.

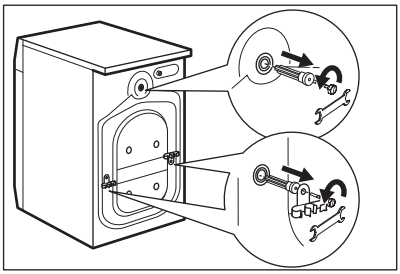

We recommend that you keep the packaging and the transit bolts for any transport of the appliance.

3.2 Information for installation

Positioning and levelling

Adjust the appliance correctly to prevent vibration, noise and movement of the appliance when it operates.

1. Install the appliance on a flat hard floor. The appliance must be levelled and stable. Make sure that the appliance does not touch the wall or other units and there is air circulation below the appliance.

2. Loosen or tighten the feet to adjust the level. All feet must rest firmly on the floor.

6. Remove the power supply cable and the drain hose from the hose holders.

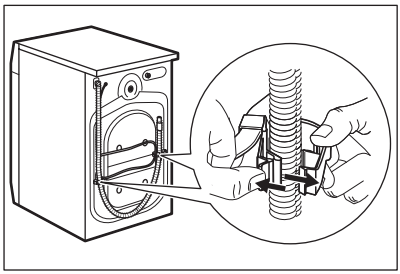

It is possible to see water flowing from the drain hose. This is because the washing machine has been tested at the factory.

8. Put the plastic caps, that you find in the user manual bag, in the holes.

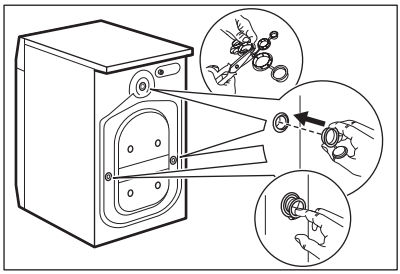

WARNING!
Do not put cardboard, wood or equivalent materials below the appliance feet to adjust the level.

The inlet hose

CAUTION!
Make sure there is no damage to hoses and there are no leaks from the couplings. Do not use an extension hose if the inlet hose is too short. Contact the service centre for a replacement inlet hose.

1. Connect the water inlet hose to the back of the appliance.

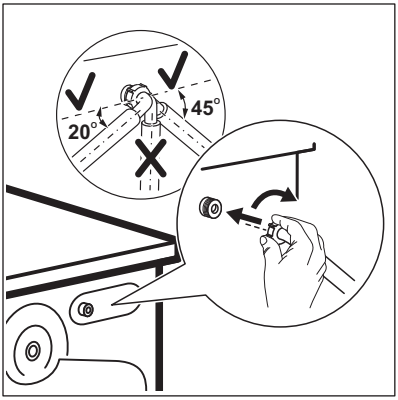

2. Position it toward left or right depending on the positon of the water tap. Make sure that the inlet hose is not in vertical position.

3. If necessary, loosen the ring nut to set it in the correct position.

4. Connect the water inlet hose to the cold water tap with 3/4" thread.

Water drainage

The drain hose should stay at a height of no less than 60 cm and not more than 100 cm.

You can extend the drain hose to maximum 400 cm. Contact the authorised service centre for the other drain hose and the extension.

It is possible to connect the drain hose in different ways:

1. Make a U shape with the drain hose and put it around the plastic hose guide.

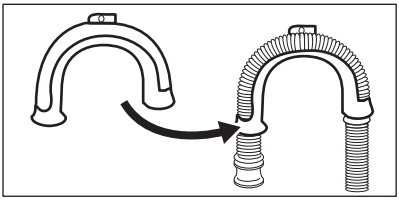

2. On the edge of a sink - Fasten the guide to the water tap or to the wall.

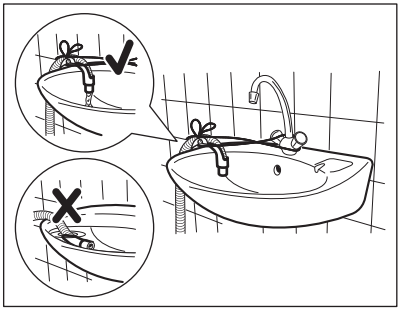

Make sure that the plastic guide cannot move when the appliance drains and the drain hose end is not immersed in the water. There may be a return of dirty water into the appliance.

3. If the end of the drain hose looks like this (see the picture), you can push it directly into the stand pipe.

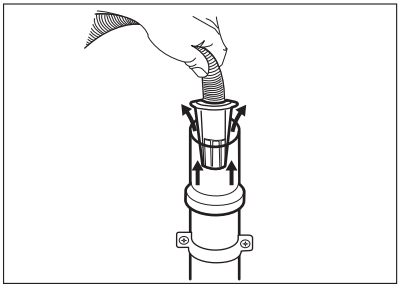

4. To a stand pipe with vent-hole - Insert the drain hose directly into a drain pipe. Refer to the illustration.

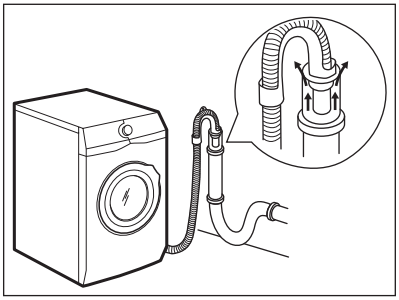

The end of the drain hose must always be ventilated , i.e. the inner diameter of the drain pipe (min. 38 mm - min. 1.5") must be larger than the external diameter of the drain hose.

5.Without the plastic hose guide, to a sink spigot- Put the drain hose in the spigot and tighten it with a clamp. Refer to the illustration.

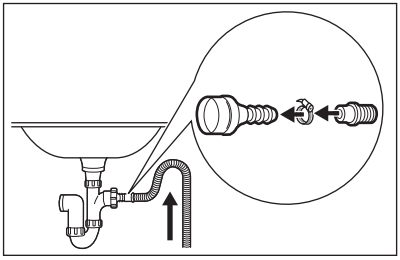

Make sure that the drain hose makes a loop to prevent particles going into the appliance from the sink.

6. Position the hose directly to a built-in drain pipe in the room wall and tighten it with a clamp.

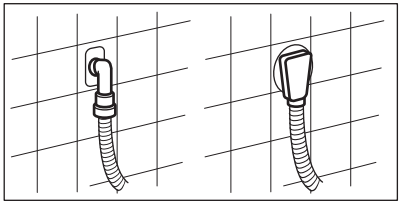

4. ACCESSORIES

4.1 Fixing plate kit (4055171146)

Available from your authorised dealer.

If you install the appliance on a plinth, secure the appliance in the fixing plates.

Read carefully the instructions supplied with the accessory.

4.2 Stacking kit

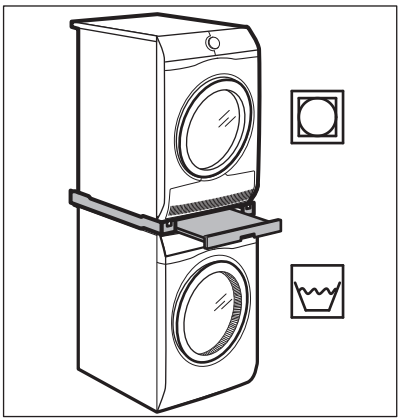

The tumble dryer can be stacked on the top of the washing machine **only by using the correct stacking kit manufactured and approved by ELECTROLUX**.

Verify the compatible stacking kit by checking the depth of your appliances.

The stacking kit can be used only with the appliances specified in the leaflet provided with the accessory.

Read carefully the instructions supplied with the appliance and with the accessory.

WARNING!
Do not put the tumble dryer under the washing machine.

4.3 Pedestal with the drawer

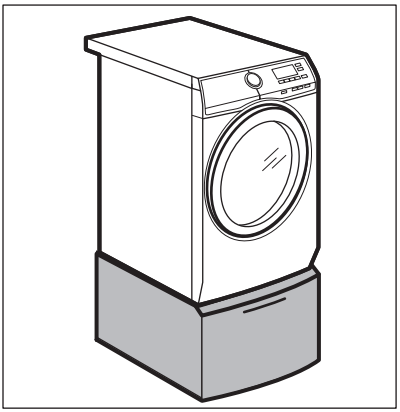

To raise your appliance and make loading and unloading laundry easier.

The drawer can be used for laundry storage e.g.: towels, cleaning products and more.

Read carefully the instructions supplied with the accessory.

4.4 Available in www.electrolux.com/shop or from authorised dealer

Only appropriate accessories approved by ELECTROLUX ensure the safety standards of the appliance. If unapproved parts are used, any claims will be invalidated.

5. PRODUCT DESCRIPTION

5.1 Appliance overview

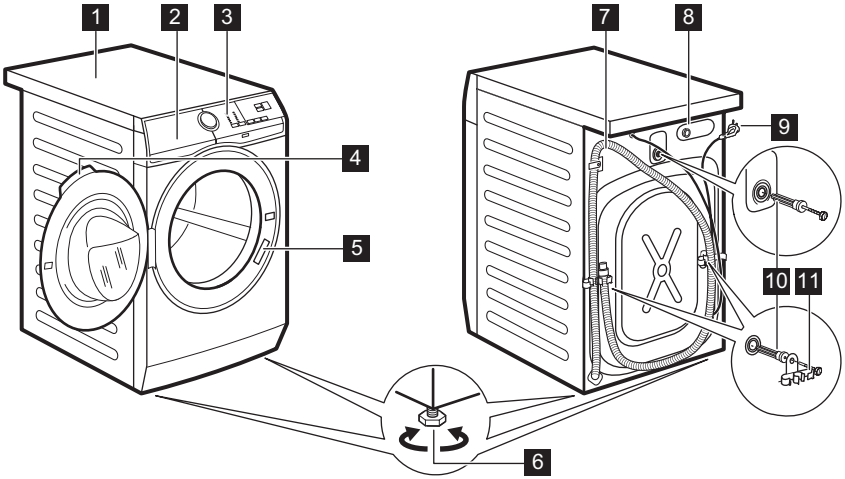

1 Worktop
2 Detergent dispenser
3 Control panel
4 Door handle
5 Rating plate
6 Feet for levelling the appliance

7 Drain hose
8 Inlet hose connection
9 Mains cable
10 Transit bolts
11 Hose support

6. CONTROL PANEL

6.1 Special features

Your new washing machine meets all modern requirements for an effective treatment of laundry with low water, energy and detergent consumption and will care for fabrics.

- The **SensiCare System** automatically adjusts the programme duration to the laundry in the drum to achieve perfect washing results in the minimum possible time.
- This appliance is designed with a self cleaning draining system, allowing light fluff fibers that fall off the clothes to be drained out with the water, in such a way that there is no need by the customer to access this area for regular maintenance and cleaning.

6.2 Control panel description

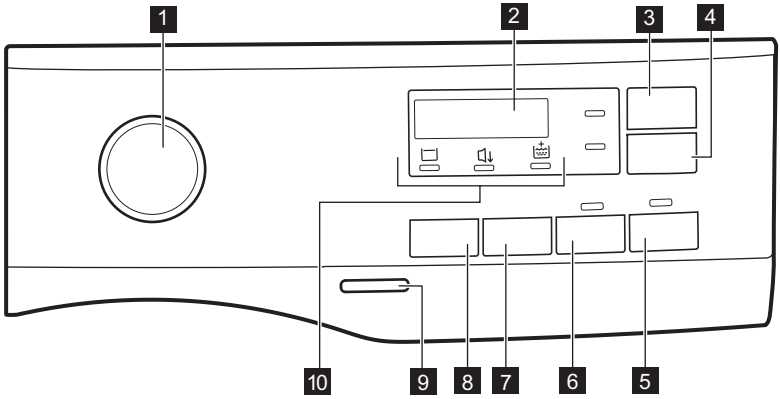

1 Programme dial
2 Display
3 Extra Rápido touch button
4 Inicio Diferido touch button
5 Inicio/Pausa touch button
6 Pre-lav. touch button
7 Centrif. reduction options touch button
8 Temp. touch button
9 On/Off push button
10 Indicators:
- Extra Aclar./Enxag.
- Silencioso
- Rinse Hold

6.3 Display

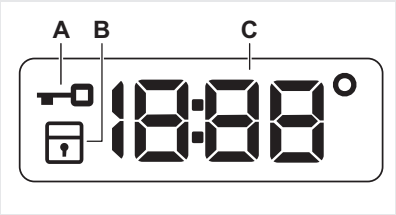

A		Door locked indicator.
B		Child safety lock indicator.
C	18:88°	The digital indicator can show: • Programme duration (e. g. 2:40). • Delay time (e. g. 2h). • Cycle end (0:00). • Warning code (e.g. E20). • Temperature (88°). • Spin speed (1888, no spin indicator – – –).

7. DIAL AND BUTTONS

7.1 Introduction

The options/functions are not available with all washing programmes. Check the compatibility between options/functions and washing programmes in the "Programme Chart". An option/function can exclude another one, in this case the appliance doesn't allow you to set incompatible options/ functions.

7.2 Extra Rápido

This option may be advisable to shorten the washing programme.

Use this option for items with normal or light soil or items to refresh.

Touch this button **once** to decrease the duration.

In case of smaller load, touch this button **twice** to set an extra quick programme.

After each touching the new programme duration is shown on the display. The relevant indicator illuminates. This option is not available for every programme. For more details, refer to Programme options compatibility in "Programmes" chapter.

7.3 Inicio Diferido

With this option you can delay the start of a programme to a more convenient time.

Touch the button repeatedly to set the required delay. The time increases in steps of 1 hour up to 20 hours.

After touching the Inicio/Pausa ▷‖ button, the relevant indicator illuminates and the selected delay time and the appliance begins the countdown. The door is locked.

7.4 Inicio/Pausa ▷‖

Touch the Inicio/Pausa ▷‖ button to start, pause the appliance or interrupt a running programme.

7.5 Pre-lav.

With this option you can add a prewash phase to a washing programme.

The relevant indicator illuminates.

- Use this option to add a pre-wash phase at 30 °C before the washing phase.
  This option is recommended for heavily soiled laundry, especially if containing sand, dust, mud and other solid particles.

This option can increase the programme duration.

7.6 Centrif.

When you set a programme, the appliance automatically sets the maximum spin speed allowed except programme Denim.

Push this button to set additional spin options:

- **Decrease the spin speed.** The display shows only the spin speeds available for the set programme.
- **No spin – – –** comes on display. Set this option to deactivate all spin phases. The appliance performs only the draining phase of the selected washing programme. Set this option for very delicate fabrics. The rinse phase uses more water for some washing programmes
- **Rinse hold** . The related indicator comes on.
  The final spin is not performed. The water of the last rinse is not drained out to prevent the fabrics from creasing. The washing programme ends with water in the drum.
  The door stays locked and the drum turns regularly to reduce creasing. You must drain the water to unlock the door.
  If you touch the Inicio/Pausa button, the appliance performs the spinning phase and drains the water.
- **Silencioso** . The related indicator comes on.
  The intermediate and the final spinning phases are suppressed and the programme ends with water in the drum. This helps to reduce creasing.
  The door stays locked. The drum turns regularly to reduce creasing. You must drain the water to unlock the door.
  As the programme is very quiet, it is suitable for use at night time when cheaper electricity tariffs are available. In some programmes the rinses are performed with more water.
  If you touch the Inicio/Pausa button, the appliance performs only the draining phase.

The appliance empties the water out automatically after approximately 18 hours.

7.7 Temp.

When you select a washing programme, the appliance automatically proposes a default temperature.

Touch this button repeatedly until the desired temperature value appears on the display.

When the display shows the indicators _ _°, the appliance does not heat the water.

7.8 On/Off

Press this button for a few seconds to activate or deactivate the appliance. Two different tunes sound while switching the appliance on or off.

As the Stand-by function automatically deactivates the appliance after several minutes to reduce the energy consumption, you may need to activate the appliance again.

For more details, refer to Stand-by paragraph in Daily Use chapter.

8. PROGRAMMES

8.1 Programme Chart

Programme Default temperature Temperature range	Reference spin speed Spin speed range [rpm]	Maximum load	Programme description (Type of load and soil level)
Algod. 40 °C 90 °C - Cold	1200 rpm (1200 - 400)	9 kg	**White cotton and coloured cotton**. Normal and heavy soil.
Algod. Eco[1)] 40 °C 60 °C - 40 °C	1200 rpm (1200 - 400)	9 kg	**White cotton and fast-coloured cotton**. Normal soil. The energy consumption decreases and the time of the washing programme is extended, ensuring good washing results.
Sintéticos 40 °C 60 °C - Cold	1200 rpm (1200 - 400)	4 kg	**Synthetic items or mixed fabric items**. Normal soil.
Delicados 30 °C 40 °C - Cold	1200 rpm (1200 - 400)	4 kg	**Delicate fabrics such as acrylics, viscose and mixed fabrics requiring gentler washing**. Normal soil.
Rápido 14 min. 30 °C	800 rpm (800 - 400)	1,5 kg	**Synthetic and mixed fabric** items. Light soil and items to freshen up.
Aclarado/ Enxag.	1200 rpm (1200 - 400)	9 kg	**All fabrics, except woollens and very delicate fabrics.** Programme for rinsing and spinning the laundry. The default spin speed is the one used for cotton programmes. Reduce the spin speed accordingly to the type of laundry. If necessary, set the Extra Aclar./Enxag. option to add rinses. With a low spin speed, the appliance performs delicate rinses and a short spin.
Drenar/ Centrif. **2)**	1200 rpm (1200 - 400)	9 kg	To spin the laundry and to drain the water in the drum. **All fabrics, except woollens and delicate fabrics**.

Programme Default temperature Temperature range	Reference spin speed Spin speed range [rpm]	Maximum load	Programme description (Type of load and soil level)
Anti-Alergia 60 °C	1200 rpm (1200 - 400)	9 kg	**White cotton items**. This programme removes micro-organisms thanks to a washing phase with the temperature maintained above 60°C for several minutes. This helps remove germs, bacteria, micro-organism and particles. An additional rinsing phase ensures a proper removal of detergent residues and pollens/ allergenic items. In this way the wash is more effective.
Edred. 40 °C 60 °C - Cold	800 rpm (800 - 400)	3 kg	**Single synthetic blanket, padded clothes, duvets, down jackets** and similar items.
Seda 30 °C	800 rpm (800 - 400)	3 kg	Special programme for **silk and mixed synthetic items**.
Lana/Lãs 40 °C 40 °C - Cold	1200 rpm (1200 - 400)	1,5 kg	**Machine washable wool, hand washable wool and other fabrics** with «hand washing» care symbol[3)].
Sport 30 °C 40 °C - Cold	1200 rpm (1200 - 400)	4 kg	**Mixed fabric sportswear**. Light soil items or items to refresh.

Programme Default temperature Temperature range	Reference spin speed Spin speed range [rpm]	Maximum load	Programme description (Type of load and soil level)
Outdoor 30 °C 40 °C - Cold	1200 rpm (1200 - 400)	2,5 kg **4)** 1 kg **5)**	Do not use fabric softener and make sure that there is no softener residue in the detergent dispenser. **Synthetic sport items.** This programme is designed to gently wash modern outdoor sportswear and is also suitable for gym, cycling or jogging clothes or similar. The recommended laundry load is 2,5 kg. **Waterproof, waterproof-breathable and water repellent fabrics.** This programme can also be used as a water repellency restoring cycle, specifically tailored for treating clothes with a hydrophobic coating. To perform the water repellency restoring cycle, proceed as follows: • Pour the washing detergent in the compartment II. • Pour a special water repellency restorer for fabric into the softener compartment of the drawer. • Reduce the laundry load to 1 kg. To further improve the water repellency restoring action, dry the laundry in a tumble dryer by setting the Outdoor drying programme (if available and if the garment care label permits tumble drying).

Programme Default temperature Temperature range	Reference spin speed Spin speed range [rpm]	Maximum load	Programme description (Type of load and soil level)
Denim 30 °C 40 °C - Cold	800 rpm (1200 - 400)	4 kg	**Special programme for Denim clothing with delicate washing phase to minimize colour fading and marks**. For better care a reduced load size is recommended.

1) Standard programmes for the Energy Label consumption values. According to regulation 1061/2010, these programmes are respectively the «Standard 60°C cotton programme» and the «Standard 40°C cotton programme». They are the most efficient programmes in terms of combined energy and water consumption for washing normally soiled cotton laundry.

The water temperature of the washing phase may differ from the temperature declared for the selected programme.

2) Set the spin speed. Make sure it is suitable for the type of fabric being washed. If you set the No Spin option then only the drain phase is available.

3) During this cycle the drum rotates slowly to ensure a gentle wash. It can seem that the drum doesn't rotate or doesn't rotate properly, but this is normal for this programme.

4) Washing programme.

5) Washing programme and waterproofing phase.

Programme options compatibility

Programme	Centrif.	– – –				Pre-lav.	Inicio Diferido	Extra Rápido
Algod.	■	■	■	■	■	■	■	■
Algod. Eco	■	■	■		■	■	■	■
Sintéticos	■	■	■	■	■	■	■	■
Delicados	■	■	■	■	■		■	
Rápido 14 min.	■	■	■				■	
Aclarado/Enxag.	■	■	■		■		■	
Drenar/Centrif.	■	■					■	
Anti-Alergia	■	■	■		■	■	■	
Edred.	■	■					■	

Programme	Centrif.	– – –				Pre-lav.	Inicio Diferido	Extra Rápido
Seda	■	■					■	
Lana/Lãs	■	■	■				■	
Sport	■	■	■		■	■	■	
Outdoor	■	■	■		■		■	
Denim	■	■	■	■	■		■	

8.2 Woolmark Apparel Care - Blue



The wool wash cycle of this machine has been approved by The Woolmark Company for the washing of wool garments labelled as «hand wash» provided that the garments are washed according to the instructions issued by the manufacturer of this washing machine. Follow the garment care label for drying and other laundry instructions. M1512
The Woolmark symbol is a Certification mark in many countries.

9. SETTINGS

9.1 Acoustic signals

This appliance has different acoustic signals, that operate when:

- You activate the appliance (special short tune).
- You deactivate the appliance (special short tune).
- You touch the buttons (click sound).
- You make an invalid selection (3 short sounds).
- The programme is completed (sequence of sounds for about 2 minutes).
- The appliance has a malfunction (sequence of short sounds for about 5 minutes).

To **deactivate/activate** the acoustic signals when the programme is completed, touch the Extra Rápido and the Inicio Diferido buttons simultaneously for about 2 seconds. The display shows On/Off

If you deactivate the acoustic signals, they continue to operate when the appliance has a malfunction.

9.2 Child Lock

With this option you can prevent children from playing with the control panel.

- To **activate/deactivate** this option, hold down the Centrif. button until **comes on/goes off** on the display.

The appliance will default to this option after you switch it off.

The Child Lock function may not be available for a few seconds after switching the appliance on.

9.3 Permanent Extra Aclar./ Enxag.

With this option you can permanently have an extra rinse when you set a new programme.

- To **activate/deactivate** this option , hold down the Pre-lav. button until relevant indicator **comes on/goes off**.

10. BEFORE FIRST USE

1. Make sure that the electrical power is available and the water tap is open.
2. Pour a small quantity of detergent into the compartment marked by .
3. Set and start a programme for cotton at the highest temperature without any laundry in the drum.

This removes all possible dirt from the drum and the tub.

11. DAILY USE

WARNING!
Refer to Safety chapters.

11.1 Activating the appliance

1. Connect the mains plug to the mains socket.
2. Open the water tap.
3. Press the On/Off button for a few seconds to activate the appliance.

A short tune sounds.

11.2 Loading the laundry

1. Open the appliance door.
2. Shake the items before you put them in the appliance.
3. Put the laundry in the drum, one item at a time.

Do not put too much laundry in the drum.

4. Close the door firmly.

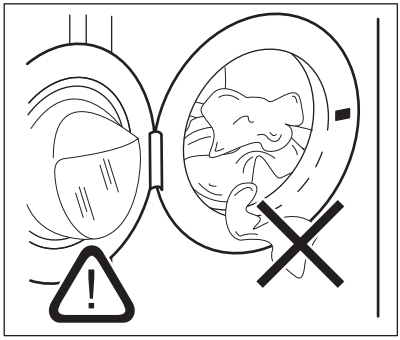

CAUTION!
Make sure that no laundry gets caught between the seal and the door to avoid risk of water leakage and damage to the laundry.

Washing heavily oiled, greasy stains could cause damage to rubber parts of the washing machine.

11.3 Filling the detergent and additives

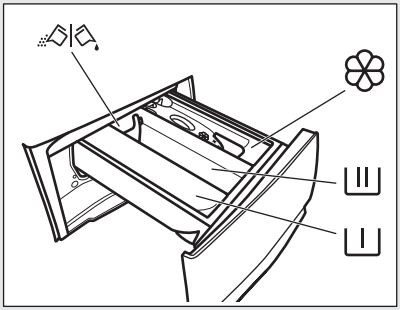

II	Compartment for prewash phase, soak programme or stain remover.
III	Compartment for washing phase.
❀	Compartment for liquid additives (fabric conditioner, starch).
MAX	Maximum level for quantity of liquid additives.
	Flap for powder or liquid detergent.

Always follow the instructions that you find on the packaging of the detergent products, but we recommend that you do not exceed the maximum indicated level (**MAX**). This quantity will however guarantee the best washing results.

After a washing cycle, if necessary, remove any detergent residue from the detergent dispenser.

11.4 Check the position of the detergent flap

1. Pull out the detergent dispenser until it stops.

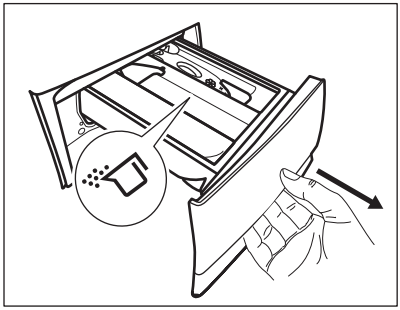

2. Press the lever down to remove the dispenser.
3. To use powder detergent, turn the flap up.
4. To use liquid detergent, turn the flap down.

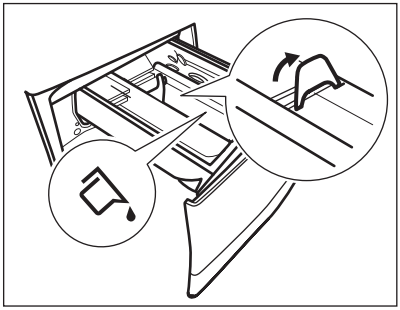

With the flap in the position **DOWN**:
- Do not use gelatinous or thick liquid detergents.
- Do not exceed to liquid detergent dose indicated on the flap.
- Do not set the prewash phase.
- Do not set the delay start function.

5. Measure out the detergent and the fabric conditioner.
6. Carefully close the detergent dispenser.

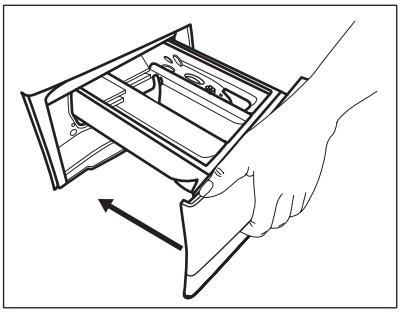

Make sure that the flap does not cause a blockage when you close the drawer.

11.5 Setting a programme

1. Turn the programme dial to select the desired washing programme.

The indicator of the Inicio/Pausa ▷‖ button flashes.
The display shows an indicative programme duration.

2. To change the temperature and/or the spin speed, touch the related buttons.
3. If desired, set one or more options by touching the related buttons.

If a selection is **not possible** an acoustic signal sounds.

11.6 Starting a programme

Touch the Inicio/Pausa ▷‖ button to start the programme. It is not possible to start the programme when the indicator of the button is off and doesn't flash (e.g. programme dial on a wrong position). The related indicator stops flashing and stays on.
The programme starts, the door is locked. The display shows the indicator ⊸▯.

The drain pump can operate shortly before the appliance fills water.

11.7 Starting a programme with the delay start

1. Touch the Inicio Diferido button until the display shows the desired delay time. The related indicator comes on.
2. Touch the Inicio/Pausa ▷‖ button. The appliance door locks and starts the countdown of the delay start. The display shows the indicator ⊸▯.

When the countdown is completed, the programme starts automatically.

Cancelling the delay start after the countdown has started

To cancel the delay start:

1. Touch the Inicio/Pausa ▷‖ button to pause the appliance. The related indicator flashes.
2. Touch the Inicio Diferido button repeatedly until the display shows ▯.
3. Touch the Inicio/Pausa ▷‖ button again to start the programme immediately.

Changing the delay start after the countdown has started

To change the delay start:

1. Touch the Inicio/Pausa ▷‖ button to pause the appliance. The related indicator flashes.
2. Touch the Inicio Diferido button repeatedly until the display shows the desired delay time.
3. Touch the Inicio/Pausa ▷‖ button again to start the new countdown.

11.8 The SensiCare System load detection

After touching the Inicio/Pausa ▷‖ button:

1. The SensiCare System starts estimating the weight of the load to calculate the real programme duration. During this phase the two dots separating hours from minutes are blinking
2. After about 15-20 minutes new cycle duration is displayed.
   The appliance automatically adjusts the programme duration to the load to achieve perfect washing results in the minimum possible time.

11.9 Interrupting a programme and changing the options

When the programme is running, you can change **only some** options:

1. Touch the Inicio/Pausa ▷‖ button.

The related indicator flashes.

2. Change the options. The given information in the display changes accordingly.
3. Touch the Inicio/Pausa ▷‖ button again.

The washing programme continues.

To start the programme again make sure that the programme dial is correctly positioned on the interrupted programme and the indicator of the Inicio/Pausa ▷‖ button is flashing.

11.10 Cancelling a running programme

1. Press the button On/Off to cancel the programme and to deactivate the appliance.
2. Press the button On/Off again to activate the appliance.

If the SensiCare System has completed and the water filling has already started, the new programme starts **without repeating the SensiCare System**. The water and the detergent are not drained out in order to avoid waste.

There is also an alternative way of cancelling:
1. Rotate the selector knob to the "Reset" position • .
2. Wait for 1 second. The display shows – – – .

Now, you can set a new washing programme.

11.11 Opening the door - Adding garments

If the temperature and level of the water in the drum are too high and/or the drum is still rotating you should not open the door.

While a programme or the delay start operates, the appliance door is locked.

The display shows the indicator ⊸▯.

1. Touch the button Inicio/Pausa ▷‖.

In the display the related door lock indicator goes off.

2. Open the appliance door. If necessary, add or remove the items. Close the door and touch the Inicio/Pausa ▷‖ button.

The programme or the delay start continues.

11.12 End of the programme

When the programme has finished, the appliance stops automatically. The acoustic signals operate (if they are active). The display shows 0:00

The indicator of the Inicio/Pausa ▷‖ button goes off.

The door unlocks and the indicator ⊸▯ goes off.

1. Press the On/Off button to deactivate the appliance.

After five minutes from the end of the programme, the energy saving function automatically deactivates the appliance.

When you activate the appliance again, the display shows the end of the previous programme. Turn the programme dial to set a new cycle.

2. Remove the laundry from the appliance.
3. Make sure that the drum is empty.
4. Keep the door and the detergent dispenser slightly ajar to prevent mildew and odours.
5. Close the water tap.

11.13 Draining water out after end of cycle

If you have chosen a programme or an option that does not empty out the water of the last rinse, the programme is completed, but:

- The time area shows 0:00 and the display shows the door locked.
- The drum still turns at regular intervals to prevent creases in the laundry.
- The door stays locked.
- You must drain the water to open the door:

1. If necessary, touch the Centrif. button to decrease the spin speed proposed by the appliance.
2. Press the Inicio/Pausa button:
   - If you have set Rinse Hold the appliance drains the water and spins.
   - If you have set Night the appliance only drains the water

The option indicator Rinse Hold disappears.

3. When the programme is completed and the door locked indicator goes off, you can open the door.
4. Press the On/Off button for a few seconds to deactivate the appliance.

11.14 Stand-by option

The Stand-by function automatically deactivates the appliance to reduce the energy consumption when:

- You do not use the appliance for 5 minutes when no programme is running.
  Press the button On/Off to activate the appliance again.
- 5 minutes after the end of the washing programme.
  Press the On/Off button to activate the appliance again.
  The display shows the end of the last programme.
  Turn the programme dial to set a new cycle.

If the dial is rotated to the "Reset" position • , the appliance automatically turns off in 30 seconds.

If you set a programme or an option that ends with water in the drum, the Stand-by function **doesn't deactivate** the appliance to remind you to drain the water.

12. HINTS AND TIPS

WARNING!
Refer to Safety chapters.

12.1 The laundry load

- Divide the laundry into: white, coloured, synthetics, delicates and wool.
- Follow the washing instructions on the laundry care labels.
- Do not wash white and coloured items together.
- Some coloured items can discolour with the first wash. We recommend that you wash them separately for the first couple of times.
- Button up pillowcases, close zippers, hooks and poppers. Tie up belts.
- Empty pockets and unfold.
- Turn multilayered fabrics, wool and items with printed illustrations inside out.
- Pre-treat tough stains.
- Wash heavy soil stains with a special detergent.
- Be careful with curtains. Remove the hooks and put the curtains in a washing bag or pillowcase.
- Do not wash laundry without hems or with cuts.
- Use a washing bag to wash small and/or delicate items (e.g. underwired bras, belts, tights, etc.).
- A very small load can cause balance problems with the spin phase leading to excessive vibration. If this occurs:
  a. interrupt the programme and open the door (refer to "Daily Use" chapter);

b. manually redistribute the load so that the items are spaced evenly around the tub;
c. press the Inicio/Pausa button. The spin phase continues.

12.2 Stubborn stains

For some stains, water and detergent is not sufficient.

We recommend that you pre-treat these stains before you put the items in the appliance.

Special stain removers are available. Use the special stain remover that is applicable to the type of stain and fabric.

12.3 Detergents and other treatments

- Only use detergents and other treatments specially made for washing machines:
  - powder detergents for all types of fabric, excluding delicate. Prefer powder detergents containing bleach for whites and laundry sanitization
  - liquid detergents, preferably for low temperature wash programmes (60 °C max) for all types of fabric, or special ones for woollens only.
- Do not mix different types of detergents.
- To help the environment, do not use more than the recommended quantity of detergent.
- Follow the instructions that you find on packaging of the detergents or other treatments without exceeding the indicated maximum level (**MAX**).
- Use the recommended detergents for the type and colour of the fabric, the programme temperature and the level of soil.

12.4 Ecological hints

- Set a programme without the prewash phase to wash laundry with normal soil.
- Always start a washing programme with the maximum load of laundry allowed.
- If you pre-treat the stains or use a stain remover, set a programme with a low temperature.
- To use the correct quantity of detergent, check the water hardness of your domestic system. Refer to "Water hardness".

12.5 Water hardness

If the water hardness in your area is high or moderate, we recommend that you use a water softener for washing machines. In areas where the water hardness is soft it is not necessary to use a water softener.

To find out the water hardness in your area, contact your local water authority.

Use the correct quantity of water softener. Follow the instructions that you find on the packaging of the product.

13. CARE AND CLEANING

WARNING!
Refer to Safety chapters.

13.1 External cleaning

Clean the appliance with mild soap and warm water only. Fully dry all the surfaces.

CAUTION!
Do not use alcohol, solvents or chemical products.

CAUTION!
Do not clean the metal surfaces with chlorine-based detergent.

13.2 Descaling

If the water hardness in your area is high or moderate, we recommend that you use a water descaling product for washing machines.

Regularly examine the drum to check for limescale.

Regular detergents already contain water softening agents, but we recommend to run a cycle with an empty drum and a descaling product occasionally.

Always follow the instructions that you find on the packaging of the product.

13.3 Maintenance wash

The repeated and prolonged use of low temperature programmes can cause detergent deposits, fluff residues, bacterial growth inside the drum and the tub. This could generate bad odours and mildew. To eliminate these deposits and clean the inner part of the appliance, run a maintenance wash regularly (at least once a month).

Refer to Cleaning the drum chapter.

13.4 Door seal with double lip trap

This appliance is designed with a **self cleaning draining system**, allowing light fluff fibers that fall off the clothes to be drained out with the water, in such a way that there is no need by the customer to access this area for regular maintenance and cleaning.

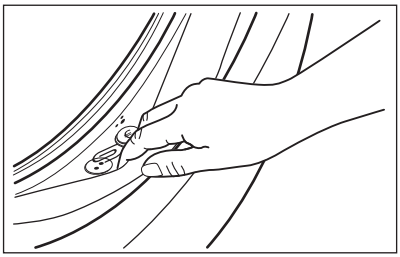

Regularly examine the seal and remove all objects from the inner part. Coins, buttons, other small items forgotten in the pockets of your clothes are deposited during the washing cycle in the special double lip trap in the porthole seal, where they can be conveniently recovered at the end of the cycle.

13.5 Cleaning the drum

Regularly examine the drum to prevent rust forming.

Clean the drum with special products for stainless steel.

Always follow the instructions that you find on the packaging of the product.

For a thorough clean:

- Remove all laundry from the drum.
- Run a Algod. programme with the highest temperature. Add a small quantity of powder detergent into the empty drum, in order to rinse out any left residues.

13.6 Cleaning the detergent dispenser

To prevent possible deposits of dried detergent or clotted fabric softener and/or formation of mould in the detergent dispenser drawer, once in a while carry out the following cleaning procedure:

1. Open the drawer. Press the catch downwards as indicated in the picture and pull it out.

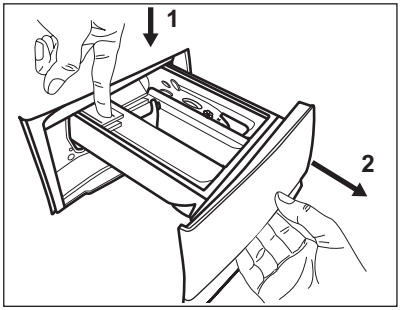

2. Remove the top part of the additive compartment to aid cleaning and flush it out under running warm

water, to remove any traces of accumulated detergent. After cleaning, put the top part back into position.

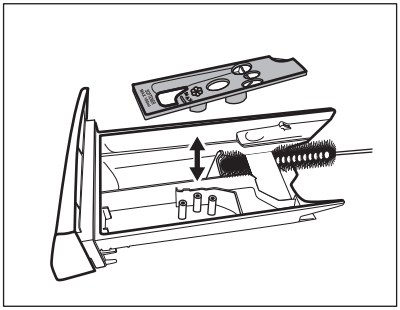

3. Make sure that all detergent residue is removed from the upper and lower part of the recess. Use a small brush to clean the recess.

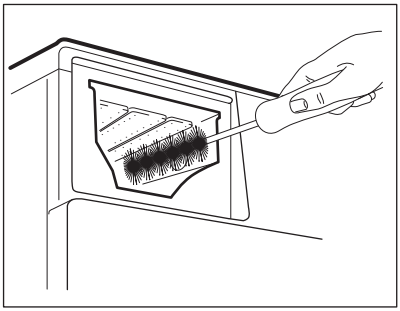

4. Insert the detergent drawer into the guide rails and close it. Run the rinsing programme without any clothes in the drum.

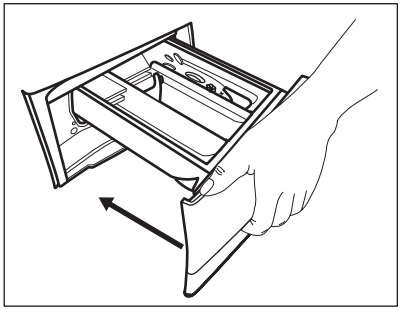

13.7 Cleaning the inlet hose and the valve filter

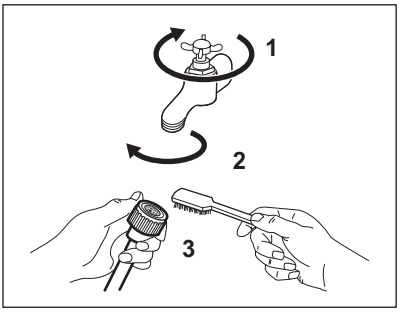

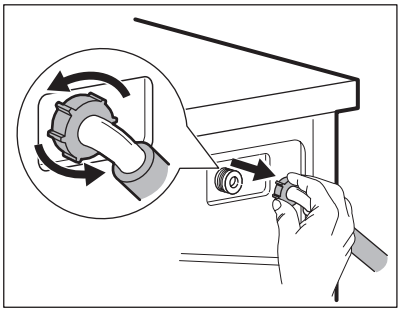

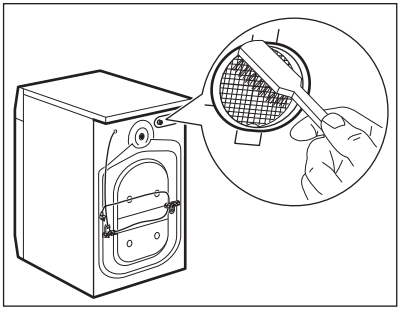

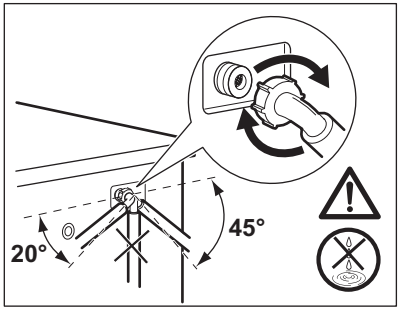

13.8 Frost precautions

If the appliance is installed in an area where the temperature can reach values around 0° C or drop below, remove the remaining water from the inlet hose and the drain pump.

1. Disconnect the mains plug from the mains socket.
2. Close the water tap.
3. Put the two ends of the inlet hose in a container and let the water flow out of the hose.
4. Empty the drain pump. Refer to the emergency drain procedure.
5. When the drain pump is empty, install the inlet hose again.

WARNING!
Make sure that the temperature is higher than 0 °C before you use the appliance again.
The manufacturer is not responsible for damages caused by low temperatures.

14. TROUBLESHOOTING

WARNING!
Refer to Safety chapters.

14.1 Introduction

The appliance does not start or it stops during operation.

First try to find a solution to the problem (refer to the table). If the problem persists, contact the Authorised Service Centre.

WARNING!
Deactivate the appliance before carrying out any check.

In case of major problems, the acoustic signals operate, the display shows an alarm code and the Inicio/Pausa **button may flash continuously:**

- EH0 - The mains supply is unstable. Wait until the mains supply is stable.
- E91 - No communication between electronic elements of the appliance. Switch it off and switch on again. The programme was not finished properly or the appliance stopped too early. If the alarm code appears again, contact the Authorised Service Centre.
- E10 - The appliance does not fill with water properly. After the proper check, start the appliance again by pressing Inicio/Pausa button the appliance tries to resume the cycle . If the error persists the alarm code will appear again.

- E20 - The appliance does not drain the water.
- E40 - The appliance door is open or not closed correctly. Please check the door!

If the appliance is overloaded, remove some items from the drum and/or hold the door shut while touching the Inicio/Pausa ▷‖ button until the indicator 🔒 stops flashing (see the picture below).

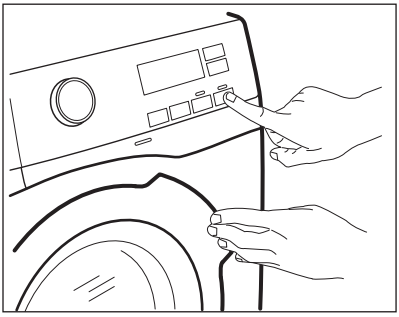

14.2 Possible failures

Problem	Possible solution
The programme does not start.	• Make sure that the mains plug is connected to the mains socket. • Make sure that the appliance door is closed. • Make sure that there is no damaged fuse in the fuse box. • Make sure that the Inicio/Pausa ▷‖ has been touched. • If the delay start is set, cancel the setting or wait for the end of countdown. • Deactivate the Child Lock function if it is on. • Check the position of the knob on the selected programme.
The appliance does not fill with water properly.	• Make sure that the water tap is open. • Make sure that the pressure of the water supply is not too low. For this information, contact your local water authority. • Make sure that the water tap is not clogged. • This problem may be caused by the filter of the inlet hose or by the clogged drain circuit. Please contact the Authorised Service Centre. • Make sure that the filter of the inlet hose and the filter of the valve are not clogged. Refer to 'Care and cleaning'.
The appliance fills with water and drains immediately	• Make sure that the drain hose is in the correct position. The hose may be positioned too low. Refer to "Installation instruction".

Problem	Possible solution
The appliance does not drain the water.	• Make sure that the sink spigot is not clogged. • Make sure that the drain hose has no kinks or bends. • This problem may be caused by the clogged drain circuit. Please contact the Authorised Service Centre. • Make sure that the connection of the drain hose is correct. • Set the drain programme if you set a programme without drain phase. • Set the drain programme if you set an option which ends with water in the tub.
The spin phase does not operate or the washing cycle lasts longer than usual.	• Set the spin programme. • This problem may be caused by the clogged drain circuit. Please contact the Authorised Service Centre. • Adjust manually the items in the tub and start the spin phase again. This problem may be caused by balance problems.
There is water on the floor.	• Make sure that the couplings of the water hoses are tight and there is not water leakages. • Make sure that the water inlet hose and the drain hose have no damages. • Make sure you use the correct detergent and the correct quantity of it.
You cannot open the appliance door.	• Make sure that a washing programme that ends with water in tub, has been selected. • Make sure that the washing programme is finished. • Set the drain or the spin programme if there is water in the drum. • Make sure that the appliance receives electrical power. • This problem may be caused by a failure of the appliance. Contact the Authorised Service Centre.
The appliance makes an unusual noise and vibrates.	• Make sure the levelling of the appliance is correct. Refer to "Installation instruction". • Make sure that the packaging and/or the transit bolts are removed. Refer to "Installation instruction". • Add more laundry in the drum. The load may be too small.
The programme duration increases or decreases during programme execution.	• The SensiCare System is able to adjust the programme duration according to the type and the laundry load size. Refer to "The SensiCare System load detection" in "Daily Use" chapter.
The washing results are not satisfactory.	• Increase the detergent quantity or use a different detergent. • Use special products to remove the stubborn stains before you wash the laundry. • Make sure that you set the correct temperature. • Decrease the laundry load.

Problem	Possible solution
Too much foam in the drum during the washing cycle.	• Reduce the quantity of detergent.
After the washing cycle, there are some detergent residues in the dispenser drawer.	• Make sure that the flap is in the correct position (UP for powder detergent - DOWN for liquid detergent). • Make sure you have used the detergent dispenser according the indications given in this user manual.

After the check, activate the appliance. The programme continues from the point of interruption.
If the problem occurs again, contact the Authorised Service Centre.
If the display shows other alarm codes, deactivate and activate the appliance. If the problem continues, contact the Authorised Service Centre.

15. CONSUMPTION VALUES

Stated values are obtained in laboratory conditions with relevant standards. Different causes can change the data: the quantity and type of laundry and ambient temperature. Water pressure, the supply voltage and the temperature of inlet water may also affect the washing programme duration.

Technical specifications may be changed without prior notice to improve the quality of product.

Programmes	Load (kg)	Energy consumption (kWh)	Water consumption (litre)	Approximate programme duration (minutes)	Remaining moisture (%)[1)]
Algod. 60°C	9	1,58	84	240	53
Algod. 40°C	9	1,30	82	210	53
Sintéticos 40°C	4	0,74	61	140	35
Delicados 40°C	4	0,55	62	95	35
Lana/Lãs 30°C	1,5	0,42	62	75	30
Standard cotton programmes					
Standard 60°C cotton	9	0,95	52	248	53
Standard 60°C cotton	4,5	0,64	43	209	53
Standard 40°C cotton	4,5	0,61	44	205	53

1) At the end of spin phase.

Off Mode (W)	Left On Mode (W)
0.30	0.30
The information given in the chart above is compliant with the EU Commission regulation 1015/2010 implementing directive 2009/125/EC .	

16. TECHNICAL DATA

Dimension	Width/ Height/ Depth/ Total depth	600 mm/ 850 mm/ 631 mm/ 660 mm
Electrical connection	Voltage Overall power Fuse Frequency	230 V 2200 W 10 A 50 Hz
Level of protection against ingress of solid particles and moisture ensured by the protective cover, except where the low voltage equipment has no protection against moisture		IPX4
Water supply pressure	Minimum Maximum	0,5 bar (0,05 MPa) 8 bar (0,8 MPa)
Water supply 1)		Cold water
Maximum Load	Cotton	9 kg
Energy Efficiency Class		A+++ -20%
Spin Speed	Maximum spin speed	1151 rpm

1) Connect the water inlet hose to a water tap with a 3/4" thread.

17. QUICK GUIDE

17.1 Daily use

Connect the mains plug to the mains socket.

Open the water tap.

Load the laundry.

Pour the detergent and other treatment in the proper compartment of the detergent dispenser.

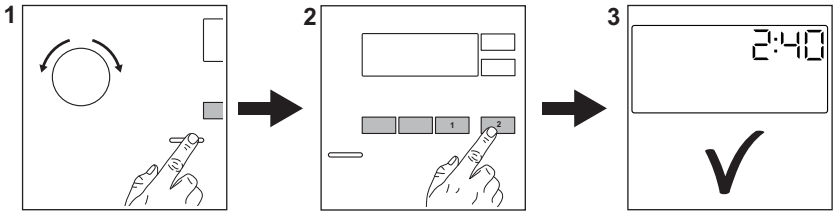

1. Push the **On/Off** button to turn the appliance on. Turn the programme dial to set the desired programme.
2. Set the desired options (1) by means of the corresponding touch buttons. To start the programme, touch the **Inicio/Pausa** ▷‖ (2) button.
3. The appliance starts.

At the end of the programme, remove the laundry.

Push the **On/Off** button to turn the appliance off.

17.2 Programmes

Programmes	Load	Product description
Algod.	9 kg	White cotton and coloured cotton.
Algod. Eco	9 kg	White cotton and coloured cotton. Standard programmes for the Energy Label consumption values.
Sintéticos	4 kg	Synthetic items or mixed fabric items.
Delicados	4 kg	Delicate fabrics such as acrylics, viscose, polyester items.
Rápido 14 min.	1,5 kg	Synthetic and mixed fabric. Lightly soiled items and garments to freshen up.
Aclarado/Enxag.	9 kg	All fabrics, except woollens and very delicate fabrics. Programme for rinsing and spinning.
Drenar/Centrif.	9 kg	All fabrics, except woollens and very delicate fabrics. Programme for spinning and draining the water.
Anti-Alergia	9 kg	White cotton items. This programme helps to remove germs and bacteria.
Edred.	3 kg	Single synthetic blanket, padded clothes, duvets, down jackets.
Seda	3 kg	Special programme for silk and mixed synthetic items.
Lana/Lãs	1,5 kg	Machine washable wool, hand washable wool and delicates.
Sport	4 kg	Sportswear.
Outdoor	2,5 kg[1)] 1 kg[2)]	Modern outdoor sporting garments.
Denim	4 kg	Denim clothing.

1) Washing programme.

2) Washing programme and waterproofing phase.

18. PRODUCT INFORMATION SHEET IN REFERENCE TO E.U. REGULATION 1369/2017

Product Information Sheet	
Trade Mark	ELECTROLUX
Model	EW6F5922EF, PNC914916602
Rated capacity in kg	9
Energy efficiency class	A+++-20%
Energy consumption in kWh per year, based on 220 standard washing cycles for cotton programmes at 60 °C and 40 °C at full and partial load, and the consumption of the low-power modes. Actual energy consumption will depend on how the appliance is used.	173
Energy consumption of the standard 60°C cotton programme at full load in kWh	0,95
Energy consumption of the standard 60°C cotton programme at partial load in kWh	0,64
Energy consumption of the standard 40°C cotton programme at partial load kWh	0,61
Power consumption of the off-mode in W	0,30
Power consumption in left-on mode in W	0,30
Water consumption in litres per year, based on 220 standard washing cycles for cotton programmes at 60 °C and 40 °C at full and partial load. Actual water consumption will depend on how the appliance is used.	10390
Spin-drying efficiency class on a scale from G (least efficient) to A (most efficient)	B
Maximum spin speed in rpm	1151
Remaining moisture content in %	53
The 'standard 60 °C cotton programme' and the 'standard 40 °C cotton programme' are the standard washing programmes to which the information in the label and the fiche relates, these programmes are suitable to clean normally soiled cotton laundry and they are the most efficient in terms of combined energy and water consumption.	-
Programme time of the standard 60°C cotton programme at full load in minutes	248
Programme time of the standard 60°C cotton programme at partial load in minutes	209

Programme time of the "standard 40°C cotton programme at partial load in minutes	205
Duration of the left on mode in minutes	5
Airborne acoustical noise emission in db(A) washing	54
Airborne acoustical noise emission in db(A) spinning	78
Built in appliance Y/N	No

The information given in the chart above is compliant with the EU Commission regulation 1015/2010 implementing directive 2009/125/EC .

19. ENVIRONMENTAL CONCERNS

Recycle materials with the symbol . Put the packaging in relevant containers to recycle it. Help protect the environment and human health by recycling waste of electrical and electronic appliances. Do not dispose of appliances marked with the symbol with the household waste. Return the product to your local recycling facility or contact your municipal office.

www.electrolux.com/shop



192932381-A-292018

CE