Operating instructions

freezer

EN

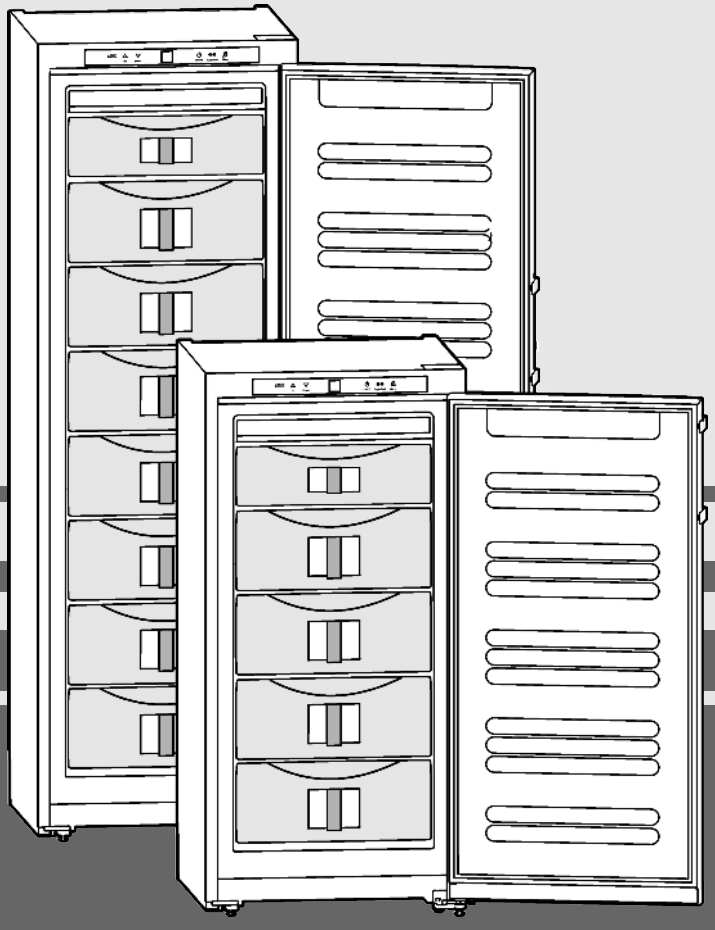

20190717 **7085668 - 01**

GN/GNP

LIEBHERR

Contents

1	**Appliance at a glance**	**2**
1.1	Description of appliance and equipment	2
1.2	Appliance range of use	2
1.3	Conformity	3
1.4	Product data	3
1.5	External dimensions of the appliance	3
1.6	Saving energy	3
1.7	Insulation plate	3
1.8	HomeDialog	4
1.9	SmartGrid	4
2	**General safety information**	**4**
3	**Controls and displays**	**5**
3.1	Operating and control elements	5
3.2	Temperature display	5
4	**Putting into operation**	**5**
4.1	Transporting the appliance	5
4.2	Installing the appliance	5
4.3	Changing over the door hinges	6
4.4	Insertion into a row of kitchen units	8
4.5	Disposing of packaging	8
4.6	Connecting the appliance	8
4.7	Switching on the appliance	8
5	**Control**	**9**
5.1	Brightness of the temperature display	9
5.2	Child proofing	9
5.3	Door alarm	9
5.4	Temperature alarm	9
5.5	Freezing food	9
5.6	Thawing food	10
5.7	Setting the temperature	10
5.8	SuperFrost	10
5.9	Drawers	10
5.10	Shelves	10
5.11	VarioSpace	10
5.12	Information system	10
5.13	Drawer for herbs and berries	11
5.14	Freezer pack	11
6	**Maintenance**	**11**
6.1	Defrosting with NoFrost	11
6.2	Cleaning the appliance	11
6.3	Changing the interior light	11
6.4	Customer service	12
7	**Malfunctions**	**12**
8	**Decommissioning**	**13**
8.1	Switching off the appliance	13
8.2	Taking the appliance out of service	13
9	**Disposing of the appliance**	**13**

The manufacturer works constantly on the further development of all the types and models. Therefore please understand that we have to reserve the right to make design, equipment and technical modifications.

To get to know all the benefits of your new appliance, please read the information contained in these instructions carefully.

The instructions apply to several models. Differences may occur. Text relating only to specific appliances is marked with an asterisk (*).

Instructions for action are marked with a ▶, the results of action are marked with a ▷.

1 Appliance at a glance

1.1 Description of appliance and equipment

Note

▶ Shelves, drawers and baskets are arranged for optimum energy efficiency on delivery.

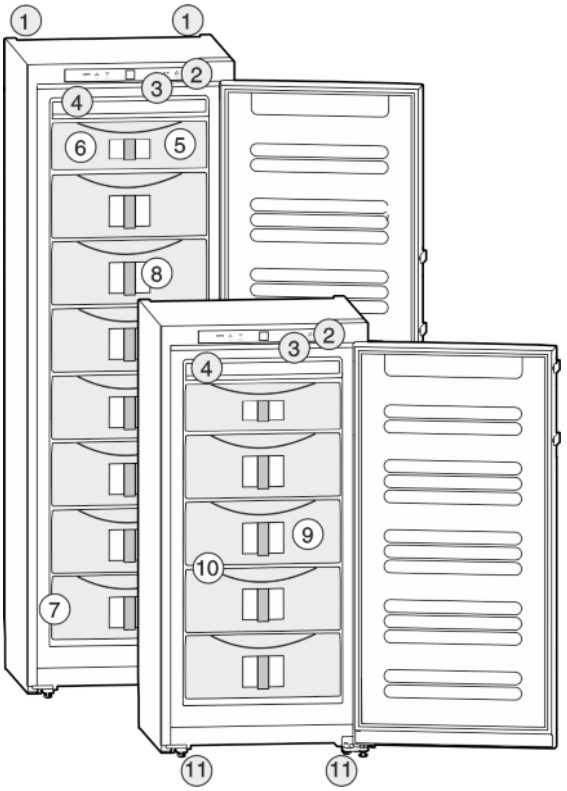

Fig. 1

(1) Transport grips at back
(2) Operating and control elements
(3) LED interior light
(4) NoFrost
(5) Drawer for herbs and berries
(6) Cold storage accumulator
(7) Type plate
(8) Drawers
(9) Information system
(10) VarioSpace
(11) Adjustable feet, transport grips at front, transport castors at back

1.2 Appliance range of use

Intended use

The appliance is only suitable for cooling food products in a domestic or household-like environment. This includes, for example, use:

- in staff kitchens, bed and breakfast establishments,
- by guests in country houses, hotels, motels and other accommodation,
- for catering and similar services in the wholesale trade.

All other types of use are not permitted.

Foreseeable misuse

The following applications are expressly forbidden:

- Storing and refrigerating medicines, blood plasma, laboratory preparations or similar substances and products based on the Medical Device Directive 2007/47/EC
- Use in outdoor areas with very high humidity.
- Use in areas at risk of explosions

Misusing the appliance may lead to damage to the goods stored or they may spoil.

Climate classifications

Depending on the climate classification the appliance is designed to operate in restricted ambient temperatures. The climate classification applying to your appliance is printed on the rating plate.

Note

▶ Keep to the specified ambient temperatures in order to guarantee that the appliance works properly.

Climate classification	for ambient temperatures
SN, N	to 32 °C
ST	to 38 °C
T	to 43 °C

The appliance will work properly down to a lower ambient temperature of 5 °C.

1.3 Conformity

The refrigerant circuit has been tested for leaks. This appliance complies with the applicable safety stipulations and with directives 2014/35/EU, 2014/30/EU, 2009/125/EG, 2011/65/EU and 2010/30/EU.

1.4 Product data

Product data is included with the appliance, as per Directive (EU) 2017/1369. The complete product data sheet is available on the Liebherr website under Downloads.

1.5 External dimensions of the appliance

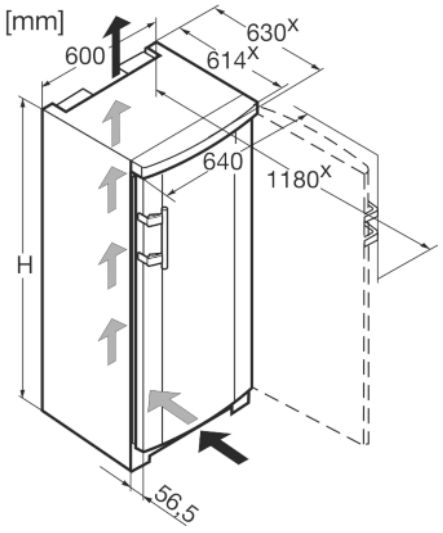

Fig. 2

Model	Height of appliance H (mm)
GN 19.., GNP 19..	1250
GN 23.., GNP 23..	1447
GN 27.., GNP 27..	1644
GN 30.., GNP 30..	1841

x For appliances supplied with wall spacers, the measurement increases by 35 mm (see 4.2) .

1.6 Saving energy

- Pay attention to good ventilation. Do not cover ventilation holes or grids.
- Do not install the appliance in direct sunlight, next to an oven, radiator or similar.
- Energy consumption is dependent on the installation conditions, e.g. ambient temperature (see 1.2) . If the ambient temperature deviates from the standard temperature of 25°C, the energy consumption may differ.
- Open the appliance for as short a time as possible.
- The lower the temperature is set the higher the energy consumption.
- Keep all food properly packed and covered. This prevents frost from forming.
- Inserting warm food: allow to cool down to room temperature first.

Dust deposits increase energy consumption:

- For refrigerators with heat exchangers dust the metal grid on the back of the appliance once a year.

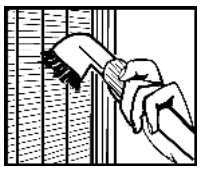

1.7 Insulation plate

The insulation plate for part-load operation is available as an accessory from specialist dealers.

If you do not store much food in the appliance, you can reduce the power consumption by as much as 50 % by using the insulation plate. Up to 5 drawers can be de-energised, depending on model. At least 3 drawers are necessary for cooling. More information accompanies the insulation plate.

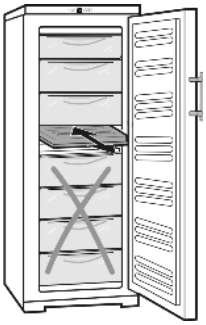

1.8 HomeDialog

Depending on model and options, the HomeDialog system can be used to network a number of Liebherr appliances (situated, for example, in the basement) with a main appliance (sited, for example, in the kitchen) and control them via the latter. You will find more information on the benefits, requirements and principle of operation on the internet at www. liebherr.com.



1.9 SmartGrid

Depending on model and options, your appliance is prepared for the advanced "SmartGrid" technology.

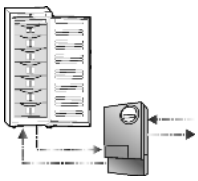

SmartGrid is a future option for reducing household electricity costs via an intelligent meter supplied by the energy provider. In the event of surplus energy being generated, for instance, by regenerative sources, households are supplied with low-cost electricity. SmartGrid-ready upright freezers are prepared for this future technology. With an appropriate additional module, you will be in a position to optimise your electricity costs.

For more information about the benefits, requirements and operating principle visit the homepage of your energy provider and www.liebherr.com.

2 General safety information

Danger for the user:

- This device can be used by children and people with impaired physical, sensory or mental abilities or with a lack of experience and knowledge provided that they are supervised or have received instruction in the safe use of this device, and about the resulting hazards. Children must not play with this appliance. Cleaning and user maintenance work must not be carried out by children without adult supervision. Children aged between 3 and 8 are allowed to load and unload the appliance. Children below the age of 3 must be kept away from the appliance unless they are under continuous adult supervision.
- When disconnecting the appliance from the supply, always take hold of the plug. Do not pull the cable.
- In the event of a fault pull out the mains plug or deactivate the fuse.
- Do not damage the mains power cable. Do not operate the appliance with a defective mains power cable.
- Repairs, interventions on the appliance and the replacement of mains connection line may only be carried out by After-Sales Service or other suitably trained specialist personnel.
- Only assemble, connect and dispose of the appliance according to the instructions.
- Please keep these instructions in a safe place and pass them on to any subsequent owners.
- Special lights, such as LED lights on the appliance, are used to illuminate the interior of the appliance and are not suitable for room lighting.

Fire hazard:

- The coolant used (information on the model plate) is eco-friendly but also flammable. Any leaking coolant may ignite.
  - Do not damage the refrigerant circuit pipes.
  - Do not use an open flame or other source of ignition inside the appliance.
  - Do not use electrical appliances inside the appliance (e.g. steam cleaners, heaters, ice cream makers, etc.).
  - If the refrigerant leaks: remove any naked flames or ignition sources from the vicinity of the leakage point. Properly air the room. Inform customer services.
- Do not store explosives or sprays using combustible propellants such as butane, propane, pentane, etc. in the appliance. To identify these spray cans, look for the list of contents printed on the can, or a flame symbol. Gases possibly escaping may ignite due to electrical components.
- Keep burning candles, lamps and other items with naked flames away from the appliance so that they do not set the appliance on fire.
- Please be sure to store alcoholic drinks or other packaging containing alcohol in tightly closed containers. Any alcohol that leaks out may be ignited by electrical components.

Danger of tipping and falling:

- Do not misuse the plinth, drawers, doors etc. as a step or for support. This applies particularly to children.

Danger of food poisoning:

- Do not consume food which has been stored too long.

Danger of frostbite, numbness and pain:

- Avoid lasting skin contact with cold surfaces or refrigerated/frozen food or take protective steps, e.g. wear gloves. Do not consume ice cream, water ice or ice cubes immediately and do not consume them too cold.

Danger of injury and damage:

- Hot steam can lead to injury. Do not use electrical heating or steam cleaning equipment, open flames or defrosting sprays to defrost.
- Do not use sharp implements to remove the ice.

Danger of crushing:

- Do not hold the hinge when opening and closing the door. Fingers may get caught.

Symbols on the appliance:

	The symbol can be located on the compressor. It refers to the oil in the compressor and indicates the following danger: Swallowing or inhaling can be fatal. This is only relevant for recycling. There is no danger in normal operation.
	This symbol is found on the compressor and indicates the danger of flammable materials.
	A sticker to this effect may be applied to the rear of the appliance. It refers to the foam-padded panels in the door and/or the housing. This is only relevant for recycling. Do not remove the sticker.

Please observe the specific information in the other sections:

	DANGER	identifies a situation involving direct danger which, if not obviated, may result in death or severe bodily injury.
	WARNING	identifies a dangerous situation which, if not obviated, may result in death or severe bodily injury.
	CAUTION	identifies a dangerous situation which, if not obviated, may result in minor or medium bodily injury.
	NOTICE	identifies a dangerous situation which, if not obviated, may result in damage to property.

	Note	identifies useful information and tips.

3 Controls and displays

EN

3.1 Operating and control elements

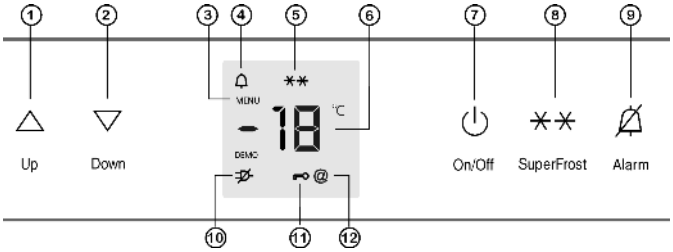

Fig. 3

(1) Up setting button
(2) Down setting button
(3) Menu symbol
(4) Alarm symbol
(5) SuperFrost symbol
(6) Temperature display
(7) On/Off button
(8) SuperFrost button
(9) Alarm button
(10) Power failure symbol
(11) Child-proofing symbol
(12) HomeDialog symbol

3.2 Temperature display

During normal operation, the display shows:

- the highest freezing temperature

The temperature display flashes if/when:

- You change the temperature setting
- The appliance is not cold enough after switching on
- The temperature rises by several degrees

Stripes flash in the display if/when:

- The freezer temperature exceeds 0 °C.

The following displays indicate a fault. Possible causes and solutions: (see 7) .

- F0 to F9
- The power failure symbol flashes.

4 Putting into operation

4.1 Transporting the appliance

CAUTION

Risk of injury and danger of damage as a result of incorrect transport!

▶ Transport the appliance in a packed condition.
▶ Transport the appliance upright.
▶ Do not transport the appliance without assistance.

4.2 Installing the appliance

WARNING

Fire hazard due to dampness!

If live parts or the mains lead become damp this may cause short circuits.

▶ The appliance is designed for use in enclosed areas. Do not operate the appliance outdoors or in areas where it is exposed to splash water or damp conditions.

WARNING
Risk of fire due to short circuit!
If the mains cable/connector of the appliance or of another appliance touch the rear of the appliance, the mains cable/connector may be damaged by the appliance vibrations, leading to a short circuit.
▶ Stand the appliance so that it is not touched by connectors or main cables.
▶ Do not plug the appliance or any others into sockets located near the rear of the appliance.

WARNING
Fire hazard due to refrigerant!
The coolant used is eco-friendly but also flammable. Any leaking coolant may ignite.
▶ Do not damage the piping of the refrigeration circuit.

WARNING
Fire hazard and danger of damage!
▶ Do not place appliances emitting heat e.g. microwaves, toasters etc. on the appliance!

WARNING
Blocked ventilation openings pose a risk of fire and damage!
▶ Always keep the ventilation openings clear. Always ensure that the appliance is properly ventilated!

NOTICE
Risk of damage due to condensate!
▶ Do not install the appliance directly alongside a further refrigerator/freezer.

Note
If you have several appliances next to one another, leave a gap of 100mm between appliances. Otherwise condensation will build up between the units.

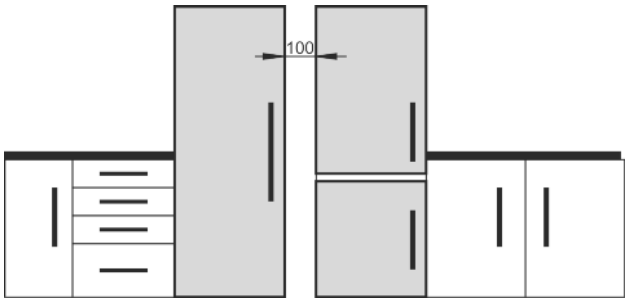

Fig. 4

❑ Before you connect the appliance, report any damage immediately to the delivery company.
❑ The floor of the installation site must be horizontal and even.
❑ Do not install the appliance in direct sunlight, next to an oven, radiator or similar.
❑ The best place for installation is a dry and well ventilated room.
❑ Install the appliance with the rear panel up against the wall and always use the supplied wall spacers (see below).
❑ Only ever move the appliance when it is empty.
❑ The surface supporting the appliance must be at the same level as the surrounding floor.
❑ Do not install the appliance on your own.
❑ The more coolant there is in the appliance, the larger the room in which the appliance is installed must be. If the room is too small, any leak may create a flammable mixture of gas and air. For each 8 g of coolant the installation space must be at least 1 m^3. Information on the coolant is on the model plate inside the appliance.

▶ Detach the connecting cable from the rear of the appliance, removing the cable holder at the same time because otherwise there will be vibratory noise!
▶ Remove all transit supports.

The spacers supplied with some appliances must be used to achieve the stated energy consumption. These will extend the depth of the appliance by approx. 35 mm. The appliance is fully functional if the spacers are not used, but does have a slightly higher energy consumption.

▶ In the case of an appliance with enclosed wall spacers, mount the wall spacers on the back of the appliance at the top left and right.

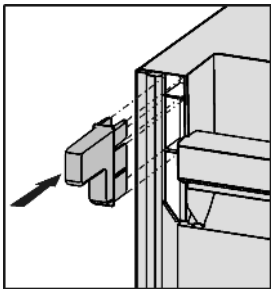

▶ Dispose of packaging material (see 4.5) .
▶ Align the appliance so that it stands firmly and on a level by applying the accompanying spanner to the adjustable-height feet (A) and using a spirit level.

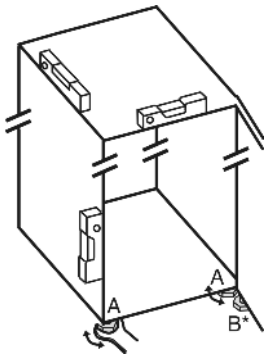

Note
▶ Clean the appliance (see 6.2) .

If the appliance is installed in a very damp environment, condensate may form on the outside of the appliance.
▶ Always see to good ventilation at the installation site.

4.3 Changing over the door hinges

You can change over the door hinges if necessary.

Ensure that the following tools are to hand:

❑ Torx 25
❑ Torx 15
❑ Screwdriver
❑ Open-ended spanner included in supply package
❑ Second person for fitting work, if needed

CAUTION
Risk of injury if the door tips!
▶ Take good hold of the door.
▶ Set down the door carefully.

- ▶ Unscrew the securing screw on the bottom right turn hinge.
- ▶ Open the door.
- ▶ Hold the door on the handle side and at the bottom and lift it.
- ▷ The bearing pin *Fig. 5 (21)* should come out of the turn hinge *Fig. 6 (2)*.
- ▶ If the bearing bolt *Fig. 5 (21)* doesn't undo press it out from underneath.
- ▶ Swing door out at the bottom and remove it.

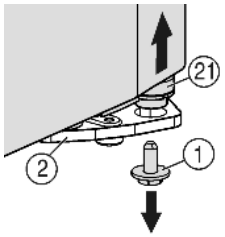

Fig. 5

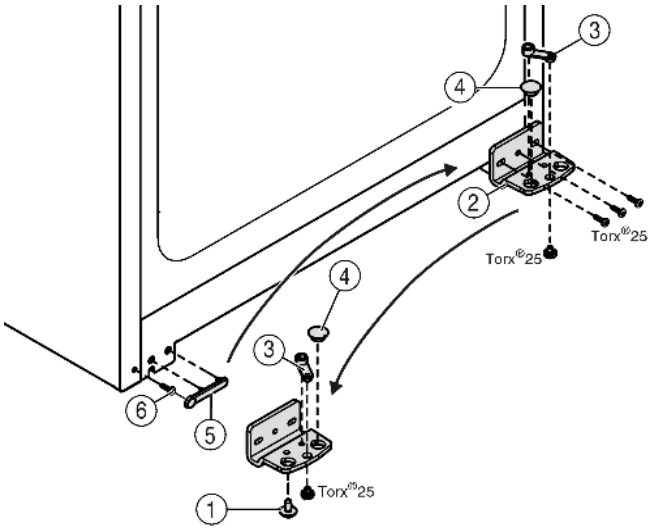

Fig. 6

- ▶ Unscrew the turn hinge *Fig. 6 (2)*.
- ▶ Unscrew the bearing element, *Fig. 6 (3)* transfer it to the opposite location hole of the turn hinge and screw it firmly into place.
- ▶ Take the stopper *Fig. 6 (4)* out of the turn hinge and transfer it to the receiving hole on the opposite side of the turn hinge.
- ▶ Carefully lift off the cover *Fig. 6 (5)* on the handle side.
- ▶ Undo the screw *Fig. 6 (6)* and transfer it to the opposite side.
- ▶ Put the cover *Fig. 6 (5)* back on.
- ▶ Screw the turn hinge *Fig. 6 (2)* firmly into place on the new hinge side **(with 4 Nm)**, possibly using a power screwdriver.

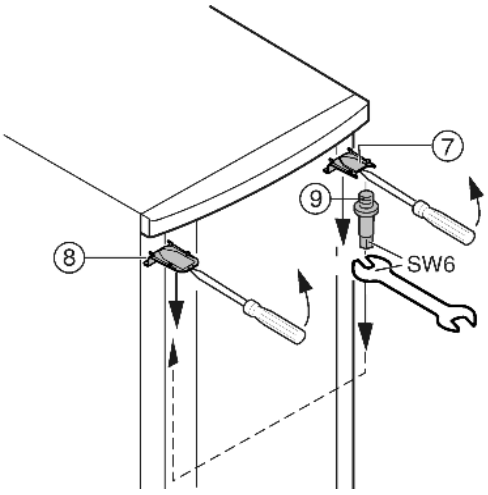

Fig. 7

- ▶ At the top, use a screwdriver to unclip cover *Fig. 7 (7)* and cover *Fig. 7 (8)* at the front, and remove by pulling out and down.
- ▶ Unscrew the bearing pin *Fig. 7 (9)* and screw it firmly into place on the opposite side **(with 4 Nm)**.
- ▶ Refit the cover *Fig. 7 (7)* on the side of the bearing pin: insert at the back, snap in at the front.
- ▶ Fit the cover *Fig. 7 (8)* on the opposite side: insert at the back, snap in at the front.

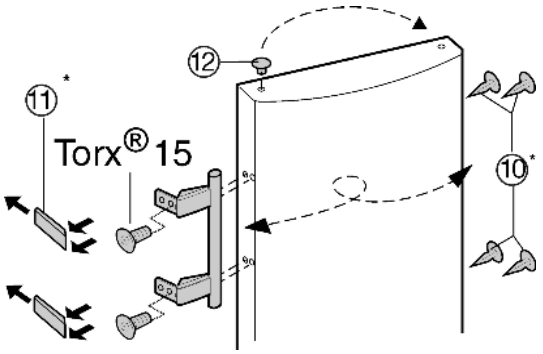

Fig. 8

- ▶ Lift the stopper *Fig. 8 (12)* out of the door bearing bush and transfer it.
- ▶ Detach door handle, stoppers *Fig. 8 (10)* and pressure plates *Fig. 8 (11)* and transfer to the opposite side.
- ▶ When mounting the pressure plates, make sure they snap into place properly.
- ▶ Transfer the spring clamp *Fig. 9 (20)*: Depress the latch nose and pull the spring clamp off over it.
- ▶ Slide the spring clamp into place on the new hinge side until it clicks into place.
- ▶ Pull the bearing pin *Fig. 9 (21)* out of the door bush and transfer it to the opposite side together with the washer. The latch nose must point to the inner side of the door, the notch to the outer side.

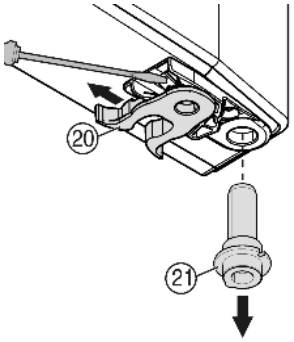

Fig. 9

- ▶ Hang the door on the bearing pin *Fig. 7 (9)* at the top.
- ▶ Swing the door in at the bottom and insert the bearing pin *Fig. 9 (21)* into the turn hinge. If necessary, turn the bearing pin until it snaps into place.
- ▶ Insert the securing screw *Fig. 5 (1)* at the bottom into the bearing pin and tighten it **(with 4 Nm)**.
- ▶ If necessary, align the door flush with the appliance housing using the two slots in the turn hinge. To do so, unscrew the middle screw.

WARNING

Risk of injury due to the door dropping out!

If the bearing parts are not screwed into place firmly enough, the door may drop out. This may lead to severe injuries. What is more, the door may not close and therefore the appliance may fail to cool properly.

- ▶ Screw on the bearing brackets/bearing pins tightly (4 Nm).
- ▶ Check all of the screws and retighten if necessary.

4.4 Insertion into a row of kitchen units

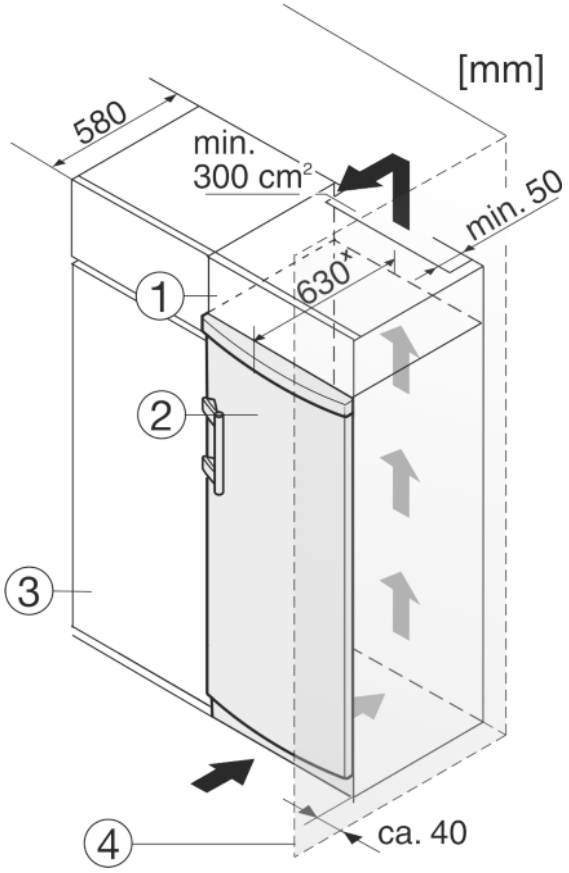

Fig. 10

(1) Stack cabinet
(2) Appliance
(3) Kitchen cabinet
(4) Wall

x For appliances supplied with wall spacers, the measurement increases by 35 mm (see 4.2) .

The appliance can be built into kitchen units. A top cupboard *Fig. 10 (2)* can be added above the appliance in order to bring the appliance *Fig. 10 (1)* up to the height of the fitted kitchen units.

When installing with kitchen units (max. depth 580 mm), the appliance can be positioned directly next to the kitchen cabinet *Fig. 10 (3)*. The appliance will project by 34 mm x at the sides and 50 mm x in the centre of the appliance in relation to the kitchen cabinet front.

NOTICE
Danger of overheating due to insufficient air ventilation!
The compressor may be damaged if there is insufficient air ventilation.
▶ Take care to ensure adequate air ventilation.
▶ Observe the ventilation requirements.

Ventilation requirements:

- At the back of the stack cabinet there has to be a ventilation duct of at least 50 mm depth throughout the width of the stack cabinet.
- The cross section of the ventilation gap below the ceiling must be at least 300 cm² .
- the larger the ventilation space, the more energy-saving the appliance is in operation.

If the appliance is installed with the hinges next to a wall *Fig. 10 (4)*, the distance between appliance and wall has to be at least 40 mm. This corresponds to the projection of the handle when the door is open.

4.5 Disposing of packaging

WARNING
Danger of suffocation due to packing material and plastic film!
▶ Do not allow children to play with packing material.

The packaging is made of recyclable materials:

- corrugated board/cardboard
- expanded polystyrene parts
- polythene bags and sheets
- polypropylene straps
- nailed wooden frame with polyethylene panel*

▶ Take the packaging material to an official collecting point.

4.6 Connecting the appliance

NOTICE
Failure to connect properly
Damage to the electronics.
▶ Do not use a standalone inverter.
▶ Do not use an energy saving plug.

WARNING
Failure to connect properly
Fire hazard.
▶ Do not use an extension cable.
▶ Do not use distributor blocks.

The type of current (alternating current) and voltage at the installation site have to conform with the data on the type plate (see 1) .

The socket must be properly earthed and fused. The tripping current for the fuse must be between 10 A and 16 A.

The socket must be easily accessible so that the appliance can be quickly disconnected from the supply in an emergency. It must be outside the area of the rear of the appliance.
▶ Check the electrical connection.
▶ Plug in the power plug.

4.7 Switching on the appliance

Note
The manufacturer recommends:
▶ Store frozen produce at -18 °C or colder.

Switch on the appliance approx. 2 hours before loading for the first time.

▶ Press On/Off button *Fig. 3 (7)*.
▷ The temperature display and the alarm symbol flash until the temperature is sufficiently low. If the temperature is above 0 °C, dashes flash. If it is below, the current temperature flashes.
▷ The interior light is on when the door is open.
▷ To cool the interior as quickly as possible when the appliance is first put into operation, the appliance runs at a high rate, i.e. compressor runs at higher speeds. Therefore the noise level is a little higher **for a short time**. Afterwards the appliance continues to operate quietly in the energy-saving, normal mode.
▷ If “DEMO” is displayed, demo mode is activated. Please contact the after sales service.

EN

5 Control

5.1 Brightness of the temperature display

You can adjust the brightness of the temperature display to the light conditions of the room in which the appliance is installed.

5.1.1 Adjusting the brightness

The brightness is adjustable between h0 (no illumination) and h5 (maximum luminosity).

▶ To activate setting mode: press the SuperFrost button *Fig. 3 (8)* for approx. 6 seconds.
▷ The display indicates c.
▷ The menu symbol *Fig. 3 (3)* shines.
▶ Using the Up setting button *Fig. 3 (1)* or Down setting button, *Fig. 3 (2)*, select h.
▶ To confirm: briefly press the SuperFrost button *Fig. 3 (8)*.
▶ To make the display brighter: press Up button *Fig. 3 (1)*.
▶ To make the display darker: press Down button *Fig. 3 (2)*.



▶ To confirm: press SuperFrost button *Fig. 3 (8)*.
▷ The brightness is adjusted to the new value.
▶ To deactivate the set-up mode: press On/Off button *Fig. 3 (7)*.

-or-

▶ Wait for 5 minutes.
▷ The temperature is indicated again in the temperature display.

5.2 Child proofing



The child-proofing function enables you to make sure that the appliance is not inadvertently switched off by playing children.

5.2.1 Setting the child lock function

▶ To activate setting mode: press the SuperFrost button *Fig. 3 (8)* for approx. 6 seconds.
▷ c flashes on the display.
▷ The menu symbol *Fig. 3 (3)* shines.
▶ Briefly press the SuperFrost button *Fig. 3 (8)*.to confirm.

When cl is indicated in the display:



▶ Tto activate the child lock, briefly press the SuperFrost button *Fig. 3 (8)*.
▷ The child lock symbol *Fig. 3 (11)* shines. c flashes in the display.

When c0 is indicated in the display:

▶ to deactivate the child lock, briefly press the SuperFrost button *Fig. 3 (8)*.
▷ The child lock symbol *Fig. 3 (11)* goes out. c flashes in the display.
▶ To deactivate the set-up mode: press On/Off button *Fig. 3 (7)* .

-or-

▶ Wait for 5 minutes.
▷ The temperature is indicated again in the temperature display.

5.3 Door alarm



An audible warning sounds if the door is open for longer than 60 seconds.

The audible warning stops automatically when the door is closed.

5.3.1 Muting the door alarm

The audible alarm can be muted when the door is open. The sound switch-off function is active as long as the door is left open.

▶ Press alarm button *Fig. 3 (9)*.
▷ The door alarm is silenced.

5.4 Temperature alarm



The audible alarm sounds if the freezer temperature is not cold enough.

The temperature display and the alarm symbol *Fig. 3 (4)* flash at the same time.

The cause of the temperature being too high may be:

- warm fresh food was placed inside
- too much warm ambient air flowed in when rearranging and removing food
- Prolonged power outage
- the appliance is faulty

The audible alarm is automatically silenced, the alarm symbol *Fig. 3 (4)* goes out and the temperature display stops flashing when the temperature is sufficiently cold again.

If the alarm status persists: (see 7) .

Note
Food may be spoilt if the temperature is not cold enough.
▶ Check the quality of the food. Do not consume spoiled food.

5.4.1 Muting the temperature alarm

The audible alarm can be muted. When the temperature is sufficiently cold again, the alarm function is active again.

▶ Press alarm button *Fig. 3 (9)*.
▷ The audible alarm is silenced.

5.5 Freezing food

The rating plate indicates the maximum quantity of fresh food you can freeze within 24 hours (see 1) under “Freezing capacity ... kg/24h”.

Each drawer can hold a max. of 25 kg of frozen food.

The shelves can each be loaded with 35 kg of frozen food.

CAUTION
Risk of injury due to broken glass!
Bottles and cans containing drinks may burst when being frozen. This applies particularly to sparkling drinks.
▶ Do not freeze bottles and cans containing drinks!

So that the food is rapidly frozen through to the core, do not exceed the following quantities per pack

- Fruit, vegetables up to 1 kg
- Meat up to 2.5 kg

▶ Pack the food in portions in freezer bags, reusable plastic, metal or aluminium containers

5.6 Thawing food

- in the refrigerator compartment
- in a microwave oven
- in a conventional or fan oven
- at room temperature

▶ Remove only as much food as is required. Use thawed food as quickly as possible.
▶ Food once thawed should be re-frozen only in exceptional cases.

5.7 Setting the temperature

The appliance is pre-set for normal operation.

The temperature can be set between -14 °C and -28 °C, the recommended temperature is -18 °C.

▶ Set temperature to be warmer: press Up setting button *Fig. 3 (1)* until the temperature in the display flashes. Release button.
▶ Set temperature to be cooler: press Down setting button *Fig. 3 (2)* until the temperature in the display flashes. Release button.
▷ The previous value is indicated in the temperature display.
▶ To change the temperature in 1 °C steps: briefly press the button.

-or-

▶ To change the temperature continuously: hold down the button.

▷ The value is displayed flashing during the setting operation.
▷ The actual temperature is displayed approx. 5 seconds after the button is last pressed. The temperature gradually adjusts to the new value.

5.8 SuperFrost

With this function you can freeze fresh food quickly through to the core. The appliance operates with maximum refrigeration. The noise of the refrigeration unit may be temporarily louder as a result.

You can freeze as many kilograms of fresh food within 24 hrs as is indicated on the type plate under “Freezing capacity ... kg/24hrs”. This maximum freezing quantity can vary depending on model and climate class.

You have to activate SuperFrost in good time, depending on how much fresh food is to be frozen: about 6 hours before placing the food inside in case of small amounts and about 24 hours in advance in case of the maximum amount of food to be frozen.

Wrap produce and spread it out as far as possible. Do not allow produce to be frozen to touch produce that is already frozen to prevent the latter thawing.

You do not have to activate SuperFrost in the following cases:

- when placing frozen food in the freezer
- when freezing up to approx. 1 kg fresh food daily

5.8.1 Freezing with SuperFrost

▶ Press SuperFrost button *Fig. 3 (8)* until the symbol ✳✳ is displayed. Release button.
▷ The freezing temperature drops, the appliance operates with the maximum cooling capacity.
For a smaller quantity of produce to be frozen:
▶ wait approx. 6 h.
▶ Place wrapped produce in the deep bottom drawers.
For the maximum quantity of produce to be frozen:
▶ wait approx. 24 h.
▶ Remove the deep bottom drawers and place produce directly on the bottom shelves.
▷ SuperFrost is automatically deactivated. Depending on the quantity placed inside, after 30 h at the earliest, 65 h at the latest.
▷ The SuperFrost symbol *Fig. 3 (5)* extinguishes once freezing is completed.
▶ Place produce in the drawers and push the latter back in again.
▷ The appliance continues to operate in the energy-saving, normal mode.

5.9 Drawers

Note
The energy consumption increases and the cooling performance decreases if there is insufficient ventilation.
For appliances with NoFrost:
▶ Leave the bottom drawer in the appliance!
▶ Always keep the air slits of the fan free at the rear wall!



▶ To store frozen food directly on the shelves pull the drawer forward and lift it out.

5.10 Shelves

5.10.1 Moving shelves

▶ To remove the shelf: lift up at the front and pull out.
▶ To put the shelf back: simply push in as far as it will go.

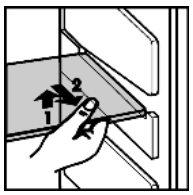

5.11 VarioSpace

You can remove the shelves and drawers. This leaves more room for larger food items such as poultry, meat, large game and tall baked goods, which can be frozen whole before further preparation.

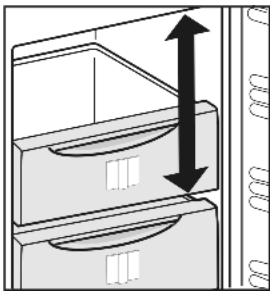

▶ Each drawer can hold max. 25 kg of frozen food.
▶ The shelves can each be loaded with 35 kg of frozen food.

5.12 Information system



Fig. 11

(1) Ready-made meals, ice cream
(2) Pork, fish
(3) Fruit, vegetables
(4) Sausages, bread
(5) Game, mushrooms
(6) Poultry, beef/veal

The figures indicate the storage time in months for several types of frozen food in each case. Storage times given are guide times.

5.13 Drawer for herbs and berries

In the drawer for herbs and berries you can freeze, berries, herbs, vegetables and other small items of food without them sticking together. Items being frozen will largely retain their shape, and it will be easier to remove exactly the right quantity later on.

5.13.1 Using the special drawer for herbs and berries

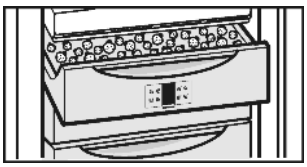

- ▶ Spread the items out loosely in the special drawer for herbs and berries.
- ▶ Allow the food to freeze through for 10 to 12 h.
- ▶ Transfer the frozen food to freezer bags or containers.
- ▶ Store freezer bags or containers in a drawer.
- ▶ To thaw the items, spead them out loosely again.

5.14 Freezer pack

Freezer packs prevent the temperature rising too quickly should there be a power cut.

5.14.1 Using freezer packs

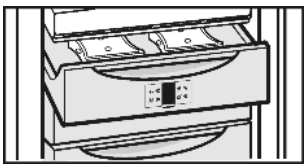

- ▶ Put the freezer packs in the herbs and berries section to save space.
- ▶ Put the fully frozen freezer packs on the frozen food in the top front section of the freezer compartment.

6 Maintenance

6.1 Defrosting with NoFrost

The NoFrost system automatically defrosts the appliance.

The moisture condenses on the evaporator, is periodically defrosted and evaporates.

▶ The appliance does not have to be manually defrosted.

6.2 Cleaning the appliance

Clean the appliance regularly.

WARNING
Risk of injury and damage as a result of hot steam!
Hot steam can lead to burns and can damage the surfaces.
▶ Do not use any steam cleaners!

NOTICE
Incorrect cleaning damages the appliance!
- ▶ Do not use cleaning agents in concentrated form.
- ▶ Do not use any scouring or abrasive sponges or steel wool.
- ▶ Do not use any sharp or abrasive cleaning agents, nor any that contain sand, chloride or acid.
- ▶ Do not use chemical solvents.
- ▶ Do not damage or remove the type plate on the inside of the appliance. It is important for the customer service.
- ▶ Do not pull off, bend or damage cables or other components.
- ▶ Do not allow any cleaning water to enter the drain channel, ventilation grille or electrical parts.
- ▶ Please use soft cleaning cloths and a universal pH-neutral cleaning agent.
- ▶ Please use cleaning and care products suitable for contact with foodstuffs in the appliance interior.

- ▶ **Empty appliance.**
- ▶ **Pull out the power plug.**



- ▶ Clean **plastic outer and inner surfaces** with lukewarm water and a little washing-up liquid.
- ▶ Only use a soft clean cloth to wipe **side walls with a paint finish**. In the case of heavy soiling, use lukewarm water with neutral cleaning agent.
- ▶ Use only a soft clean cloth to wipe **door surfaces** with a paint finish. In the case of heavy soiling, use a little water or neutral cleaning agent. A micro-fibre cloth can be used optionally.
- ▶ **Clean drawers** by hand with lukewarm water and a little washing up liquid.
- ▶ Clean **other items of equipment** by hand with lukewarm water and a little washing-up liquid.

After cleaning:
- ▶ Wipe dry the appliance and items of equipment.
- ▶ Connect the appliance and switch it on again.
- ▶ Switch on SuperFrost (see 5.8) .
  When the temperature is sufficiently cold:
- ▶ Put the food back inside.

6.3 Changing the interior light

Inside the appliance, an LED light is included as standard for interior lighting.

If an incandescent lamp is used:
- ❑ Use an incandescent light with a max. 15 W and E14 fighting.
- ❑ The type of current (alternating current) and voltage at the location where the appliance is set up must agree with the information on the type plate (see 1) .

If an LED light is used:
- ❑ Only the manufacturer's original LED light may be used. The light is available through Customer Service or specialist dealers (see 6.4) .

WARNING
Risk of injury from LED light!
The light intensity of the LED lighting corresponds to risk group RG 2.
If the cover is removed:
- ▶ Do not look directly into the light at close quarters through optical lenses. Doing so may damage your eyes.

WARNING
Fire hazard from the LED light!
If different LED lights are used, there is a danger of overheating or fire.
▶ Use the manufacturer's original LED light.

If the light is defective, exchange it as follows:

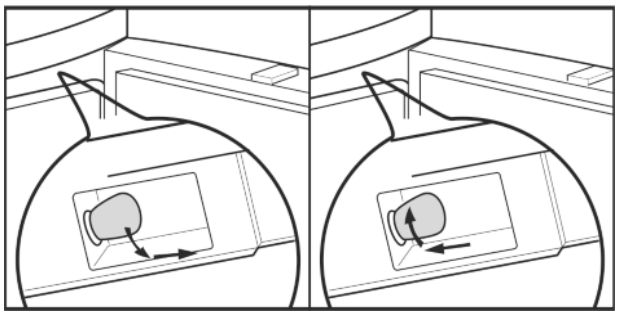

Fig. 12

▶ Switch off the appliance.
▶ Pull out the power plug or switch off the fuse.
▶ Exchange the light under the control panel according to illustration.

6.4 Customer service

First check whether you can correct the fault yourself by reference to the list (see 7) . If this is not the case, please contact the customer service whose address is given in the enclosed customer service list.

WARNING
Risk of injury if repair work is not carried out professionally!
▶ Have any repairs and action - not expressly specified - on the appliance and mains cable carried out by service personnel only. (see 6)

▶ Read the appliance designation *Fig. 13 (1)*, service No. *Fig. 13 (2)* and serial No. *Fig. 13 (3)* off the type plate located inside the appliance on the left-hand side.

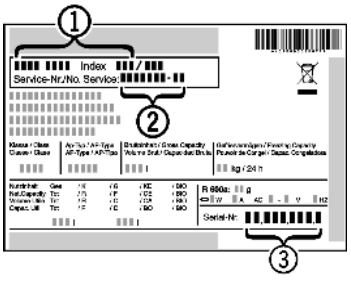

Fig. 13

▶ Notify the customer service, specifying the fault, appliance designation *Fig. 13 (1)*, service No. *Fig. 13 (2)* and serial No. *Fig. 13 (3)*.
▷ This will help us to provide you with a faster and more accurate service.
▶ Keep the appliance closed until the customer service arrives.
▷ The food will stay cool longer.
▶ Pull out the mains plug (not by pulling the connecting cable) or switch off the fuse.

7 Malfunctions

Your appliance is designed and manufactured for a long life span and reliable operation. If a malfunction nonetheless occurs during operation, check whether it is due to a handling error. In this case you will have to be charged for the costs incurred, even during the warranty period. You may be able to rectify the following faults yourself:

Appliance does not work.
→ The appliance is not switched on.
▶ Switch on the appliance.
→ The power plug is not properly inserted in the wall socket.
▶ Check power plug.
→ The fuse of the wall socket is not in order.
▶ Check fuse.

The compressor runs for a long time.
→ The compressor switches to a low speed when little cold is needed. Although the running time is increased as a result, energy is saved.
▶ This is normal in energy-saving models.
→ SuperFrost is activated.
▶ The compressor runs for longer in order to rapidly cool the food. This is normal.

A LED on the bottom rear of the appliance (at the compressor) flashes regularly every 15 seconds*.
→ The inverter is equipped with a diagnostic LED.
▶ The flashing is normal.

Excessive noise.
→ Due to the various speed steps, speed-regulated* compressors can generate different running noises.
▶ The sound is normal.

A bubbling and gurgling noise.
→ This noise comes from the refrigerant flowing in the refrigeration circuit.
▶ The sound is normal.

A quiet clicking noise.
→ The noise is produced whenever the refrigeration unit (motor) automatically switches on or off.
▶ The sound is normal.

A hum. It is briefly a little louder when the refrigeration unit (the motor) switches on.
→ The refrigeration increases automatically when the SuperFrost, function is activated, fresh food has just been placed in the appliance or the door has been left open for a while.
▶ The sound is normal.
→ The ambient temperature is too high.
▶ Solution: (see 1.2)

Vibration noises
→ The appliance is not standing firmly on the floor. As a result objects and adjacent units start to vibrate when the refrigerator is running.
▶ Align the appliance using the adjustable feet.

The temperature display indicates: F0 to F9
→ There is a fault.
▶ Please contact the after-sales service (see 6) .

Power failure flashes in the temperature display . The highest temperature reached during power failure is indicated in the temperature display.
→ The freezer temperature rose too high over the last hours or days due to a power failure or power interruption. When the power interruption is over, the appliance will continue to operate in the last temperature setting.
▶ To cancel the display of the warmest temperature: press alarm button *Fig. 3 (9)*.
▶ Check the quality of the food. Do not consume spoiled food. Do not re-freeze thawed food.

DEMO shines in the temperature display.
→ The demo mode is activated.
▶ Please contact the after-sales service (see 6) .

The outer surfaces of the appliance are warm*.
→ The heat of the refrigeration circuit is used to prevent condensate from forming.

▶ This is normal.

The temperature is not cold enough.

→ The door of the appliance is not properly closed.

▶ Close the door of the appliance.

→ Insufficient ventilation.

▶ Keep ventilation grille clear, and clean it.

→ The ambient temperature is too high.

▶ Solution: (see 1.2) .

→ The appliance was opened too frequently or for too long.

▶ Wait to see whether the appliance reaches the required temperature by itself. If not, please contact the after sales service (see 6) .

→ Too much fresh food was placed inside without SuperFrost.

▶ Solution: (see 5.8)

→ The temperature is incorrectly set.

▶ Set the temperature to a colder setting and check after 24 hours.

→ The appliance is too close to a source of heat (stove, heater etc).

▶ Change the position of the appliance or the source of heat.

Dashes ("- -") are shown on the display.

→ The freezing temperature has risen above zero degrees because of a power cut or power interruption.

▶ See also "Power failure" and ""

The internal light does not come on.

→ The appliance is not switched on.

▶ Switch the appliance on.

→ The door was open for longer than 15 minutes.

▶ The internal light switches itself off automatically after about 15 minutes if the door is open.

→ If the inside light does not come on but the temperature display is lit up, the lamp (if model comes with an LED lamp) needs replacing.

WARNING

Risk of injury from LED light!

The light intensity of the LED lighting corresponds to risk group RG 2.

If the cover is removed:

▶ Do not look directly into the light at close quarters through optical lenses. Doing so may damage your eyes.

▶ Change the lamp (see 6) .

The door gasket is defective or should be replaced for other reasons.

→ In some units, the seal around the door can be replaced. You will not need any special tools to do this.

▶ Please contact the after-sales service (see 6) .

The unit has iced up or condensation has formed.

→ The door seal may have also slipped out of its groove.

▶ Check to ensure that the door seal is seated properly in the groove.

8 Decommissioning

8.1 Switching off the appliance

▶ Press the On/Off button *Fig. 3 (7)* until the display goes dark. Release button.

▷ If the appliance cannot be switched off, the child lock function is active (see 5.2) .

8.2 Taking the appliance out of service

▶ Empty the appliance.

▶ Switch off the appliance (see 8) .

▶ Remove mains connector.

▶ Clean the appliance (see 6.2) .



▶ Leave the door open to prevent odour.

9 Disposing of the appliance



The appliance contains some reusable materials and should be disposed of properly - not simply with unsorted household refuse. Appliances which are no longer needed must be disposed of in a professional and appropriate way, in accordance with the current local regulations and laws.

When disposing of the appliance, ensure that the refrigeration circuit is not damaged to prevent uncontrolled escape of the refrigerant it contains (data on type plate) and oil.

▶ Disable the appliance.

▶ Pull out the plug.

▶ Cut through the connecting cable.

Liebherr-Hausgeräte Marica EOOD
4202 Radinovo
Bezirk Plovdiv
Bulgarien

home.liebherr.com