CyberPower

3-Phase
Power Distribution Unit

USER'S MANUAL

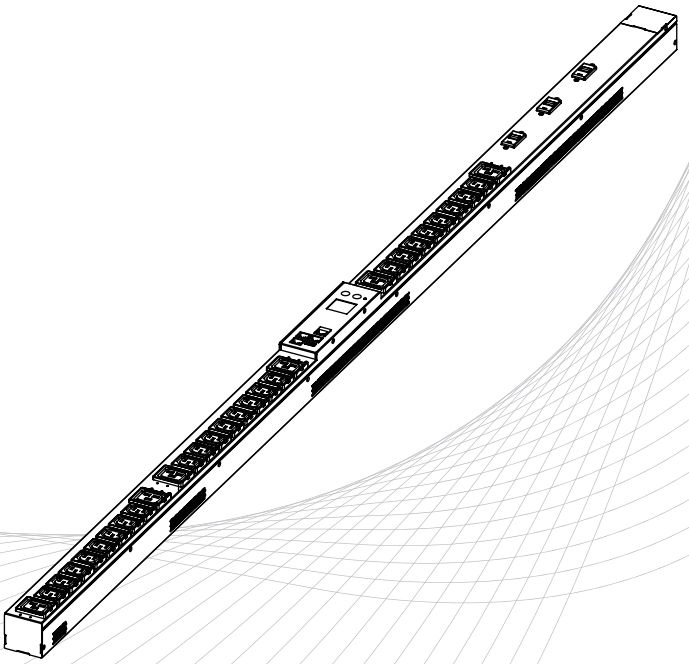

Copyright © 2019 Cyber Power Systems, Inc. All rights reserved. K01-0000699-00

Table of Contents

Model List **1**

Input Plug Type **1**

Safety Precautions **2**

Introduction **3**

Package Contents 3

Product Features 4

Switched Metered by Outlet/Switched (16/20A Models) 4

Technical Specifications 5

Switched Metered by Outlet/Switched (30/32/50/60A Models) 6

Technical Specifications 7

Monitored (16/20A Models) 9

Technical Specifications 10

Monitored (30/32/50/60A Models) 11

Technical Specifications 12

Basic (16/20A Models) 14

Technical Specifications 15

Basic (32/50A Models) 16

Technical Specifications 17

Installation Guide **18**

PDU Installation 18

Power Cord Direction Change - For Selected PDU Models 22

Locking Power Cord - For IEC Type PDU 23

Output Power Cord 23

Electrical Installation 23

Network Installation 24

Operation **25**

Remote Management 25

Local Management 25

LED Indicators 26

Environmental Monitoring (optional) 26

Device Reset 26

Unattended/Automatic Shutdown 26

Firmware Upgrade **27**

Troubleshooting **31**

Conformance Approvals **31**

FCC Warning 31

Customer Service & Warranty **32**

Product Registration 32

CyberPower International 32

Limited Warranty 32

Appendix A-Hyper Terminal **33**

Appendix B-Power Device Network Utility **33**

Overview 33

Installation 33

Launch Program 35

Getting Started 35

Advanced Settings 36

Appendix C-PDU Daisy-Chain Function **38**

Model List

Switched Metered by Outlet Series

PDU83101	PDU83105	PDU83111
PDU83102	PDU83106	PDU83401
PDU83103	PDU83107	PDU83402
PDU83104	PDU83108	PDU83403

Switched Series

PDU43101	PDU43105	PDU43111
PDU43102	PDU43106	PDU43401
PDU43103	PDU43107	PDU43402
PDU43104	PDU43108	PDU43403

Monitored Series

PDU33101	PDU33106	PDU33111
PDU33102	PDU33107	PDU33112
PDU33103	PDU33108	PDU33121
PDU33104	PDU33109	PDU33401
PDU33105	PDU33110	PDU33402

Basic Series

PDU13101	PDU13103	PDU13401
PDU13102	PDU13104	PDU13402

Input Plug Type

NEMA L21-20P

NEMA L21-30P

NEMA L15-20P

NEMA L15-30P

IEC 309 16A
3P+N+E

IEC 309 32A
3P+N+E

IEC 309 30A
3P+E

IEC 309 60A
3P+E

Hubbell
CS8365C

IEC 309 20A
3P+N+E

IEC 309 60A
3P+N+E

Safety Precautions

Read the following before installing or operating the Power Distribution Units (PDU):

- Make sure to disconnect all power supply cords before attempting to service or remove this unit.
- As for overcurrent protection, please be noted that all PDUs with an input current rating greater than 20A are equipped with flush-mount branch circuit breakers according to bank numbers.
- Use only the supplied hardware to attach the mounting brackets.
- The PDU must be plugged into a three-wire, grounded outlet on a circuit that is protected by a fuse or circuit breaker. For 20A PDU series, please use a 20A circuit protector. For 30A PDU series, please use a 30A circuit protector. For 50A PDU series, please use a 50A circuit protector. For 60A PDU series, please use a 60A circuit protector. Connection to any other type of power outlet may result in a shock hazard.
- Do not use extension cords or adapters with this PDU.
- Never install a PDU or associated wiring or equipment during a lightning storm.
- Ensure that the power cord, plug, and socket are in good condition.

CAUTION!!

To prevent the risk of fire or electrocution, this PDU should be installed in a temperature and humidity controlled indoor area free of conductive contaminants. Do not install this PDU where excessive moisture or heat is present.

WARNING!!

This product can expose you to harmful chemicals, including Styrene, which is known to the State of California to cause cancer; and Bisphenol-A, which is known to the State of California to cause birth defects or other reproductive harm.
For more information, please visit www.P65Warnings.ca.gov.

Introduction

Package Contents

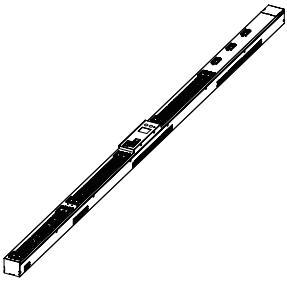

PDU

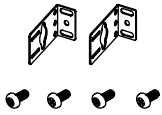

Mounting Brackets
with 6 (M4x5) Screws

6 (M5 x 12) Rack Mounting
Screws/Washers

6 (M3 x 6)
Cord Retention Tray
Mounting Screws

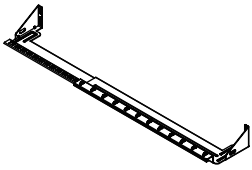

Cord Retention Tray

Cable Ties:
Qty. 40 (18 to 27 outlet PDU)
Qty. 50 (30 to 36 outlet PDU)
Qty. 70 (42 to 48 outlet PDU)

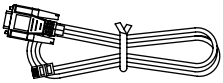

RJ45/DB9 Serial Port
Connection Cable

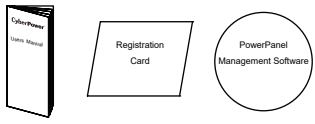

User's Manual, Registration Card,
and Software Download Card

Check

Before using, please check to ensure the package contains all the items shown above. If there are missing parts, please contact your local CyberPower technical support team for assistance.

Product Features:
Switched Metered by Outlet/Switched (16/20A Models)

Front/Rear Panel Description

NEMA Type

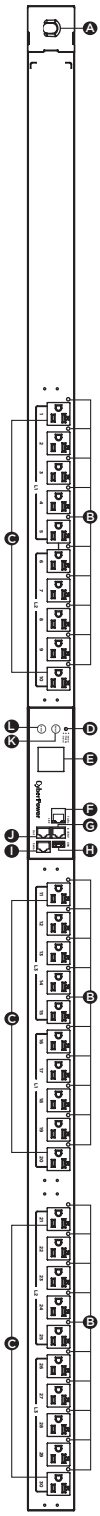

IEC Type

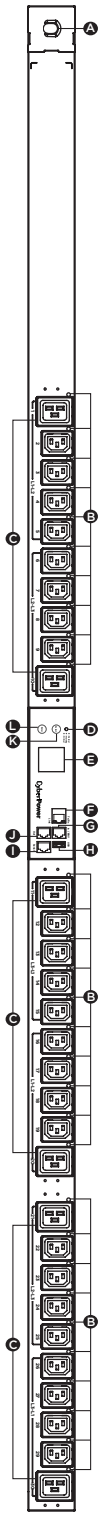

Rear Panel

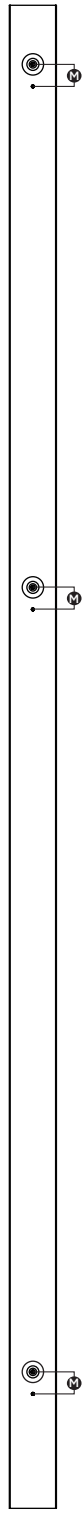

Product Features:
Switched Metered by Outlet/Switched (16/20A Models)

A. AC Inlet/ AC Power Cord - Used to connect PDU to utility power or UPS.
B. Outlet Indicator (Switched Series only) - Indicates if the outlet is providing power to connected equipment.
C. AC Output Receptacles - Provides power for connected equipment.
D. Status Indicator - Indicates the condition of the PDU (eg. load or environment status)
E. Multifunction LCD Readout - Displays various PDU information such as power and load condition.
F. Ethernet Port – Used to connect PDU to the network.
G. ENVIROSENSOR/ Daisy Chain (In) Port (RJ45 modular port) – Used for ENVIROSENSOR or chaining to previous PDU.
H. USB Port - Used to upgrade the firmware via a flash drive.
I. Serial Port (RJ45 modular port) - Used to connect to a PC and control the PDU locally via SSH/Telnet.
J. Daisy Chain (Out) Port – Used for chaining to next PDU..
K. Select Button - Used to control the LCD screen and toggle through the available information options
L. Enter Button - Used to choose selected items, enter to next level menu or return to previous menu.
M. Bracket Screw Hole - Used to secure the Mounting Pegs (pre-installed) or Mounting Brackets.

Technical Specifications

Model Name	PDU83101 PDU43101	PDU83102 PDU43102	PDU83103 PDU43103	PDU83111 PDU43111	PDU83401 PDU43401
Input					
Nominal Voltage	208V	200-240V		346-415V	
Frequency	50/60Hz				
Maximum Input Current	16A UL (Derated)				16A CE
Plug Type	NEMA L21-20P		NEMA L15-20P	IEC 309 20A Red (3P+N+E)	IEC 309 16A Red (3P+N+E)
Power Cord Type	SR (12 AWG)				
Power Cord Length	10 ft / 3.05 m				
Output					
Nominal Voltage	120V	200-240V			
Maximum Output Current	16A UL (Derated)				16A CE
Outlet Type	(30) NEMA 5-20R	(24) IEC 320 C13 (6) IEC 320 C19			
Outlet Number	30				
Management and Communications					
Multifunction LCD Readout	Voltage, Frequency, Load, Current, HW/FW Version, Network Information				
Software	PowerPanel® Business Edition				
Networking	Yes				
Serial Port	RJ45				
Sensor Capable	Optional				
Physical					
Dimensions (H x W x D)	70.5" x 2.2" x 2.2" / 1790mm x 56mm x 55mm				
Environmental					
Humidity	0 to 95% Non-condensing				
Altitude	11480ft / 3500m				
Temperature	23°F to 140°F / -5°C to 60°C			23°F to 131°F / -5°C to 55°C	
Safety Approvals					
Certifications	UL60950-1, UL62368-1. FCC Class A.				CB, CE EN55032/24 Class A

* All specifications are subject to change without notice

Product Features:
Switched Metered by Outlet/Switched (30/32/50/60A Models)

Front/Rear Panel Description

IEC Type

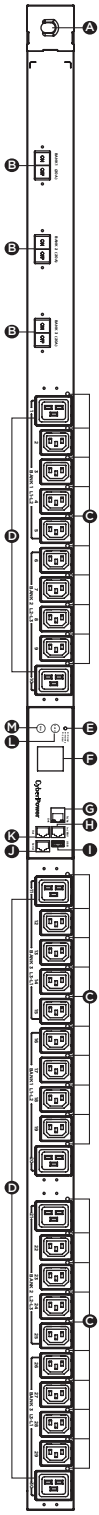

Rear Panel

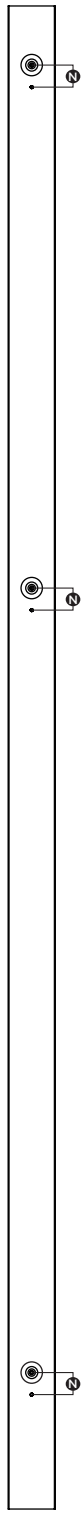

Product Features:
Switched Metered by Outlet/Switched (30/32/50/60A Models)

A. AC Inlet/ AC Power Cord - Used to connect PDU to utility power or UPS.
B. Circuit Breaker – Provides overload protection.
C. Outlet Indicator (switched series only) – Indicates if the outlet is providing power to connected equipment.
D. AC Output Receptacles - Provides power for connected equipment.
E. Status Indicator - Indicates the condition of the PDU (eg. load or environment status).
F. Multifunction LCD Readout - Displays various PDU information such as power and load condition.
G. Ethernet Port – Used to connect PDU to the network.
H. ENVIROSENSOR/ Daisy Chain (In) Port (RJ45 modular port) – Used for ENVIROSENSOR or chaining to previous PDU.
I. USB Port - Used to upgrade the firmware via a flash drive.
J. Serial Port (RJ45 modular port) - Used to connect to a PC and control the PDU locally via SSH/Telnet.Select Button - Used to control the LCD screen and toggle through the available information options.
K. Daisy Chain (Out) Port – Used for chaining to next PDU.
L. Select Button - Used to control the LCD screen and toggle through the available information options.
M. Enter Button - Used to choose selected items, enter to next level menu or return to previous menu.
N. Bracket Screw Hole - Used to secure the Mounting Pegs (pre-installed) or Mounting Brackets.

Technical Specifications

Model Name	PDU83104 PDU43104	PDU83105 PDU43105	PDU83106 PDU43106
Input			
Nominal Voltage	200-240V		
Frequency	50/60Hz		
Maximum Input Current	24A UL (Derated)		
Plug Type	NEMA L21-30P	NEMA L15-30P	IEC 309 30A Blue (3P+E)
Power Cord Type	SR (10 AWG)		
Power Cord Length	10 ft/3.05 m		
Output			
Nominal Voltage	200-240V		
Maximum Output Current	24A UL (Derated)		
Outlet Type	(24) IEC 320 C13 (6) IEC 320 C19		
Outlet Number	30		
Management and Communications			
Multifunction LCD Readout	Voltage, Frequency, Load, Current, HW/FW Version, Network Information		
Software	PowerPanel® Business Edition		
Networking	Yes		
Serial Port	RJ45		
Sensor Capable	Optional		
Physical			
Dimensions (H x W x D)	70.5" x 2.2" x 2.2" / 1790mm x 56mm x 55mm		
Environmental			
Humidity	0 to 95% Non-condensing		
Altitude	11480 ft/3500 m		
Temperature	23°F to 140°F / -5°C to 60°C		23°F to 131°F / -5°C to 55°C
Safety Approvals			
Certifications	UL60950-1, UL62368-1. FCC Class A		

* All specifications are subject to change without notice.

Product Features:
Switched Metered by Outlet/Switched (30/32/50/60A Models)

Technical Specifications

Model Name	PDU83107 PDU43107	PDU83108 PDU43108
Input		
Nominal Voltage	200-240V	
Frequency	50/60Hz	
Maximum Input Current	35A UL (Derated)	
Plug Type	Hubbell CS8365C	IEC 309 60A Blue (3P+E)
Power Cord Type	SR (8 AWG)	
Power Cord Length	10 ft/3.05 m	
Output		
Nominal Voltage	200-240V	
Maximum Output Current	35A UL (Derated)	
Outlet Type	(24) IEC 320 C13 (6) IEC 320 C19	
Outlet Number	30	
Management and Communications		
Multifunction LCD Readout	Voltage, Frequency, Load, Current, HW/FW Version, Network Information	
Software	PowerPanel® Business Edition	
Networking	Yes	
Serial Port	RJ45	
Sensor Capable	Optional	
Physical		
Dimensions (H x W x D)	70.5" x 2.2" x 2.2" / 1790mm x 56mm x 55mm	
Environmental		
Humidity	0 to 95% Non-condensing	
Altitude	11480 ft/3500 m	
Temperature	23°F to 140°F / -5°C to 60°C	23°F to 131°F / -5°C to 55°C
Safety Approvals		
Certifications	UL60950-1, UL62368-1. FCC Class A	

* All specifications are subject to change without notice.

Technical Specifications

Model Name	PDU83402 PDU43402	PDU83403 PDU43403
Input		
Nominal Voltage	346-415 V	
Frequency	50/60Hz	
Maximum Input Current	32A CE	35A CE
Plug Type	IEC 309 32A Red (3P+N+E)	IEC-309 60A Red (3P+N+E)
Power Cord Type	SR (10 AWG)	SR (8 AWG)
Power Cord Length	10 ft/3.05 m	
Output		
Nominal Voltage	200-240V	
Maximum Output Current	32A CE	35A CE
Outlet Type	(24) IEC 320 C13 (6) IEC 320 C19	
Outlet Number	30	
Management and Communications		
Multifunction LCD Readout	Voltage, Frequency, Load, Current, HW/FW Version, Network Information	
Software	PowerPanel® Business Edition	
Networking	Yes	
Serial Port	RJ45	
Sensor Capable	Optional	
Physical		
Dimensions (H x W x D)	70.5" x 2.2" x 2.2" / 1790mm x 56mm x 55mm	
Environmental		
Humidity	0 to 95% Non-condensing	
Altitude	11480 ft/3500 m	
Temperature	23°F to 131°F / -5°C to 55°C	
Safety Approvals		
Certifications	CB, CE EN55032/24 Class A	

* All specifications are subject to change without notice.

Product Features:
Monitored (16/20A Models)

Front/Rear Panel Description

NEMA Type

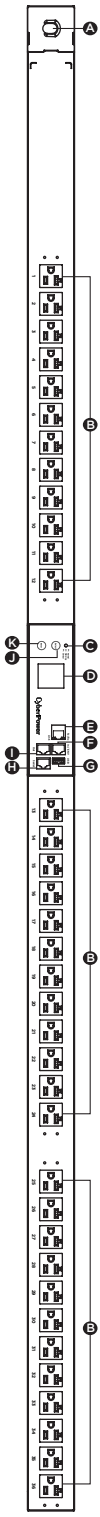

IEC Type

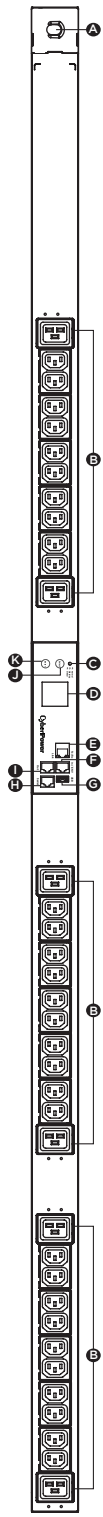

Rear Panel

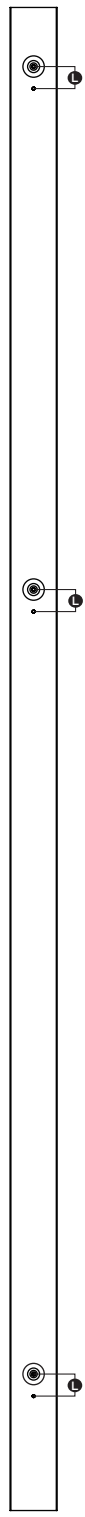

Product Features: Monitored (16/20A Models)

A. AC Inlet/ AC Power Cord - Used to connect PDU to utility power or UPS.
B. AC Output Receptacles - Provides power for connected equipment.
C. Status Indicator - Indicates the condition of the PDU (eg. load or environment status).
D. Multifunction LCD Readout - Displays various PDU information such as power and load condition.
E. Ethernet Port – Used to connect PDU to the network.
F. ENVIROSENSOR/ Daisy Chain (In) Port (RJ45 modular port) – Used for ENVIROSENSOR or chaining to previous PDU.
G. USB Port - Used to upgrade the firmware via a flash drive.
H. Serial Port (RJ45 modular port) - Used to connect to a PC and control the PDU locally via SSH/Telnet.
I. Daisy Chain (Out) Port – Used for chaining to next PDU.
J. Select Button - Used to control the LCD screen and toggle through the available information options.
K. Enter Button - Used to choose selected items, enter to next level menu or return to previous menu.
L. Bracket Screw Hole - Used to secure the Mounting Pegs (pre-installed) or Mounting Brackets.

Technical Specifications

Model Name	PDU33101 PDU33102 PDU33103	PDU33104	PDU33121 PDU33401
Input			
Nominal Voltage	208V	200-240V	346-415 V
Frequency	50/60Hz		
Maximum Input Current	16A UL (Derated)		16A UL (Derated) 16A CE
Plug Type	NEMA L21-20P	NEMA L15-20P	IEC 309 16/20A Red (3P+N+E)
Power Cord Type	SR (12 AWG)		
Power Cord Length	10 ft/3.05 m		
Output			
Nominal Voltage	120V 120/208V 120/208V	200-240V	
Maximum Output Current	16A UL (Derated)		16A UL (Derated) 16A CE
Outlet Type	(36)NEMA 5-20R (24) NEMA 5-20R (6) NEMA L6-20R (2) NEMA 5-20R (36) IEC 320 C13 (6) IEC 320 C19	(30) IEC 320 C13 (6) IEC 320 C19	
Outlet Number	36 30 44	36	
Management and Communications			
Multifunction LCD Readout	Voltage, Frequency, Load, Current, HW/FW Version, Network Information		
Software	PowerPanel® Business Edition		
Networking	Yes		
Serial Port	RJ45		
Sensor Capable	Optional		
Physical			
Dimensions (H x W x D)	70.5" x 2.2" x 2.2" / 1790mm x 56mm x 55mm		
Environmental			
Humidity	0 to 95% Non-condensing		
Altitude	11480 ft/3500 m		
Temperature	23°F to 140°F / -5°C to 60°C		23°F to 131°F / -5°C to 55°C
Safety Approvals			
Certifications	UL 60950-1, UL62368-1, FCC Class A		UL 60950-1, UL62368-1, FCC Class A CB, CE EN55032/24 Class A

* All specifications are subject to change without notice.

Product Features:
Monitored (30/32/50/60A Models)

Front/Rear Panel Description

IEC Type

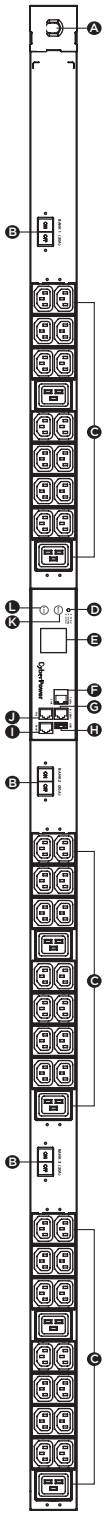

Rear Panel

Product Features: Monitored (30/32/50/60A Models)

A. AC Inlet/ AC Power Cord - Used to connect PDU to utility power or UPS.
B. Circuit Breaker – Provides overload protection.
C. AC Output Receptacles - Provides power for connected equipment.
D. Multifunction LCD Readout - Displays various PDU information such as power and load condition.
E. Multifunction LCD Readout - Displays various PDU information such as power and load condition.
F. Ethernet Port – Used to connect PDU to the network.
G. ENVIROSENSOR/ Daisy Chain (In) Port (RJ45 modular port) – Used for ENVIROSENSOR or chaining to previous PDU.
H. USB Port - Used to upgrade the firmware via a flash drive.
I. Serial Port (RJ45 modular port) - Used to connect to a PC and control the PDU locally via SSH/Telnet.
J. Daisy Chain (Out) Port – Used for chaining to next PDU.
K. Select Button - Used to control the LCD screen and toggle through the available information options.
L. Enter Button - Used to choose selected items, enter to next level menu or return to previous menu.
M. Bracket Screw Hole - Used to secure the Mounting Pegs (pre-installed) or Mounting Brackets.

Technical Specifications

Model Name	PDU33105	PDU33106	PDU33107	PDU33108
				PDU33109
Input				
Nominal Voltage	208V	200-240V		
Frequency	50/60Hz			
Maximum Input Current	24A UL (Derated)			35A UL (Derated)
Plug Type	NEMA L21-30P	NEMA L15-30P	IEC 309 30A Blue (3P+E)	Hubbell CS8365C
Power Cord Type	SR (10 AWG)			SR (8 AWG)
Power Cord Length	10 ft/3.05 m			
Output				
Nominal Voltage	120/208V	200-240V		
Maximum Output Current	24A UL (Derated)			35A UL (Derated)
Outlet Type	(2) NEMA 5-20R (36) IEC 320 C13 (6) IEC 320 C19	(36) IEC 320 C13 (6) IEC 320 C19	(42) IEC 320 C13 (6) IEC 320 C19	(36) IEC 320 C13 (6) IEC 320 C19
				(42) IEC 320 C13 (6) IEC 320 C19
Outlet Number	44	42	48	42
				48
Management and Communications				
Multifunction LCD Readout	Voltage, Frequency, Load, Current, HW/FW Version, Network Information			
Software	PowerPanel® Business Edition			
Networking	Yes			
Serial Port	RJ45			
Sensor Capable	Optional			
Physical				
Dimensions (H x W x D)	70.5" x 2.2" x 2.2" / 1790mm x 56mm x 55mm			
Environmental				
Humidity	0 to 95% Non-condensing			
Altitude	11480 ft/3500 m			
Temperature	23°F to 140°F / -5°C to 60°C		23°F to 131°F / -5°C to 55°C	23°F to 140°F / -5°C to 60°C
Safety Approvals				
Certifications	UL60950-1, UL62368-1. FCC Class A			

* All specifications are subject to change without notice.

Technical Specifications

Model Name	PDU33110	PDU33402
	PDU33111	
	PDU33112	
Input		
Nominal Voltage	200-240V	346-415V
Frequency	50/60Hz	
Maximum Input Current	48A UL (Derated)	32A CE
	48A UL (Derated)	
	35A UL (Derated)	
Plug Type	IEC 309 60A Blue (3P+E)	IEC 309 32A Red (3P+N+E)
Power Cord Type	SR (6 AWG)	SR (10 AWG)
	SR (6 AWG)	
	SR (8 AWG)	
Power Cord Length	10 ft/3.05 m	10 ft/3.05 m
Output		
Nominal Voltage	200-240V	
Maximum Output Current	48A UL (Derated)	32A CE
	48A UL (Derated)	
	35A UL (Derated)	
Outlet Type	(6) IEC 320 C13 (12) IEC 320 C19	(30) IEC 320 C13 (6) IEC 320 C19
	(30)IEC 320 C13	
	(42) IEC 320 C13 (6) IEC 320 C19	
Outlet Number	18	36
	30	
	48	
Management and Communications		
Multifunction LCD Readout	Voltage, Frequency, Load, Current, HW/FW Version, Network Information	
Software	PowerPanel® Business Edition	
Networking	Yes	
Serial Port	RJ45	
Sensor Capable	Optional	
Physical		
Dimensions (H x W x D)	70.5″ x 2.2″ x 2.2″ / 1790mm x 56mm x 55mm	
Environmental		
Humidity	0 to 95% Non-condensing	
Altitude	11480 ft/3500 m	
Temperature	23°F to 131°F / -5°C to 55°C	
Safety Approvals		
Certifications	UL 60950-1, UL62368-1, FCC Class A	CB, CE EN55032/24 Class A

* All specifications are subject to change without notice.

Product Features:
Basic (16/20A Models)

Front/Rear Panel Description

NEMA Type

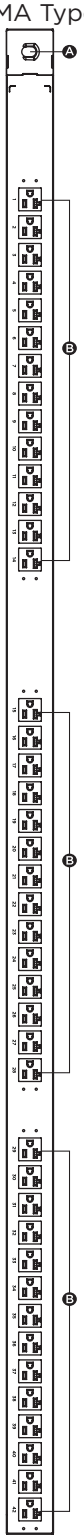

IEC Type

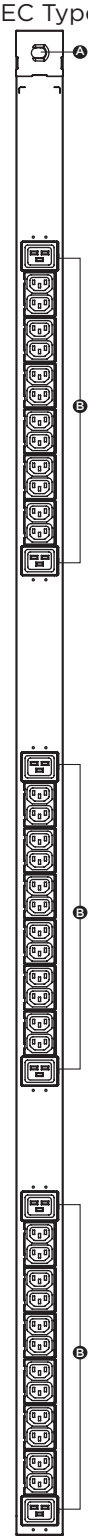

Rear Panel

A. AC Inlet/ AC Power Cord - Used to connect PDU to utility power or UPS.
B. AC Output Receptacles - Provides power for connected equipment.
C. Bracket Screw Hole - Used to secure the Mounting Pegs (pre-installed) or Mounting Brackets.

Technical Specifications

Model Name	PDU13101	PDU13401
	PDU13102	
	PDU13103	
Input		
Nominal Voltage	208V	346-415V
	208V	
	200-240V	
Frequency	50/60Hz	
Maximum Input Current	16A UL (Derated)	16A CE
Plug Type	NEMA L21-20P	IEC 309 16A Red (3P+N+E)
Power Cord Type	SR (12 AWG)	
Power Cord Length	10 ft/ 3.05 m	
Output		
Nominal Voltage	120V	200-240 V
	120/208V	
	200-240V	
Maximum Output Current	16A UL (Derated)	16A CE
Outlet Type	(42)NEMA 5-20R	(36) IEC 320 C13 (6) IEC 320 C19
	(21) NEMA 5-20R (6) NEMA L6-20R	
	(36) IEC 320 C13 (6) IEC 320 C19	
Outlet Number	42	42
	27	
	42	
Physical		
Dimensions (H x W x D)	70.5" x 2.2" x 2.2" / 1790mm x 56mm x 55mm	
Environmental		
Humidity	0 to 95% Non-condensing	
Altitude	11480 ft/ 3500 m	
Temperature	23°F to 140°F / -5°C to 60°C	23°F to 131°F / -5°C to 55°C
Safety Approvals		
Certifications	UL 60950-1, FCC Class A	CB, CE EN55032/24 Class A

* All specifications are subject to change without notice.

Product Features:
Basic (32/50A Models)

Front/Rear Panel Description

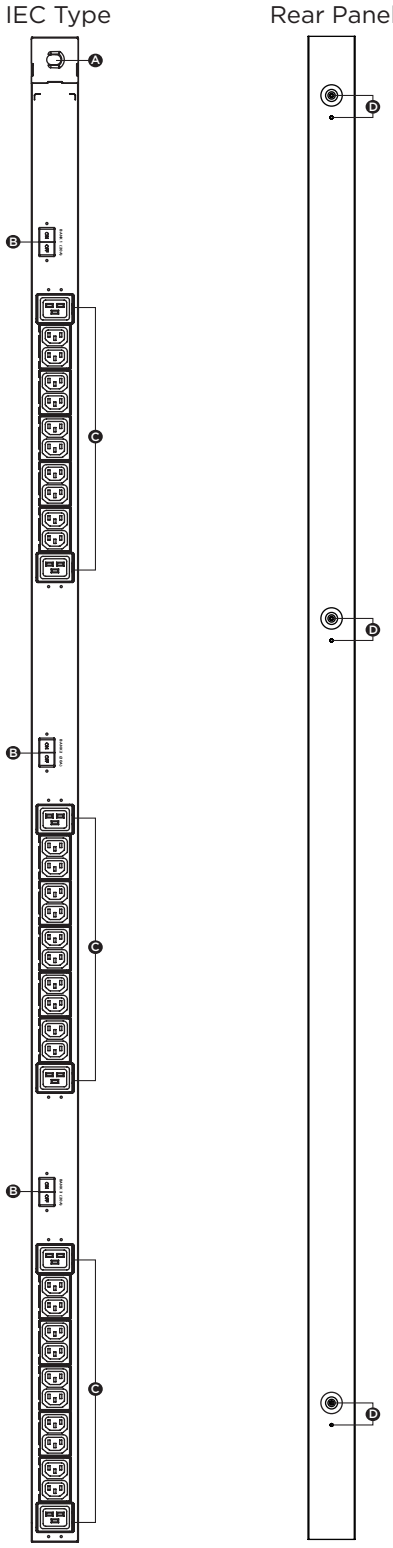

A. AC Inlet/ AC Power Cord - Used to connect PDU to utility power or UPS.
B. Circuit Breaker – Provides overload protection.
C. AC Output Receptacles - Provides power for connected equipment.
D. Bracket Screw Hole - Used to secure the Mounting Pegs (pre-installed) or Mounting Brackets.

Technical Specifications

Model Name	PDU13104	PDU13402
Input		
Nominal Voltage	200-240V	346-415V
Frequency	50/60Hz	
Maximum Input Current	35A UL (Derated)	32A CE
Plug Type	Hubbell CS8365C	IEC 309 32A Red (3P+N+E)
Power Cord Type	SR (8 AWG)	SR (10 AWG)
Power Cord Length	10 ft/ 3.05 m	
Output		
Nominal Voltage	200-240V	
Maximum Output Current	35A UL (Derated)	32A CE
Outlet Type	(30) IEC 320 C13 (6) IEC 320 C19	(36) IEC 320 C13 (6) IEC 320 C19
Outlet Number	36	42
Physical		
Dimensions (H x W x D)	70.5" x 2.2" x 2.2" / 1790mm x 56mm x 55mm	
Environmental		
Humidity	0 to 95% Non-condensing	
Altitude	11480 ft/ 3500 m	
Temperature	23°F to 140°F / -5°C to 60°C	23°F to 131°F / -5°C to 55°C
Safety Approvals		
Certifications	UL 60950-1, FCC Class A	CB, CE E55032/ 24 Class A

* All specifications are subject to change without notice.

Installation Guide

PDU Installation

Step 1. PDU Mounting

Align the Keyhole Mounts to the Keyhole Slots on the rack. Insert and slide down to lock firmly into the place.

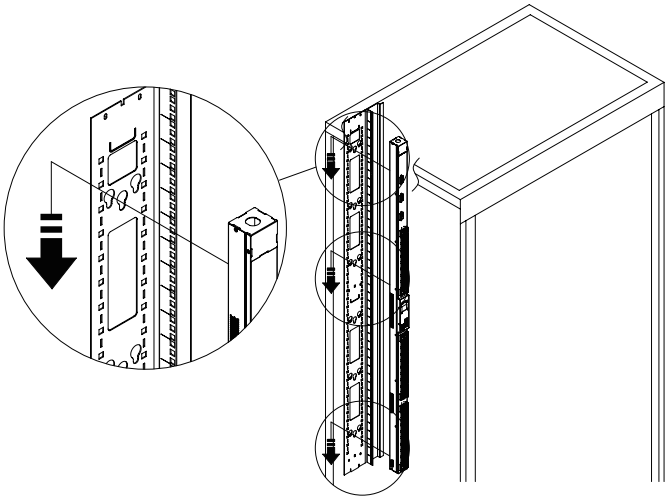

If there is no Keyhole Slot on your rack, please choose from the following methods that is best for your rack deployment to secure the PDU.

Use the supplied Washers and Rack Mounting Screws to attach the Mounting Brackets to your existing rack system.

Align the Keyhole Mounts to the Keyhole Slots on the Mounting Brackets. Insert and slide down to lock firmly into the place.

Method 1

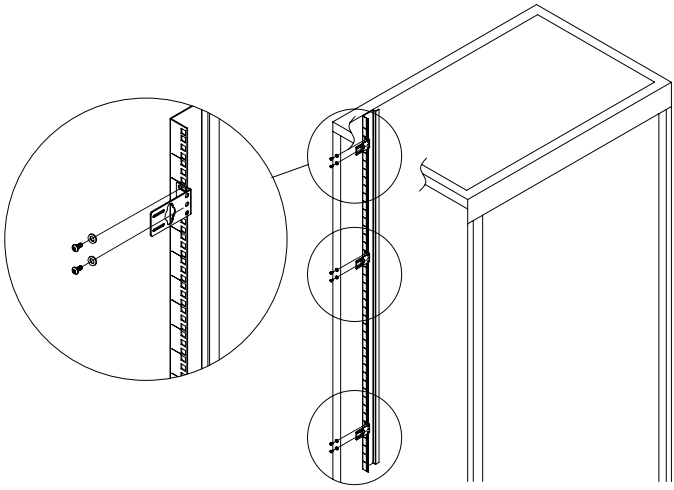

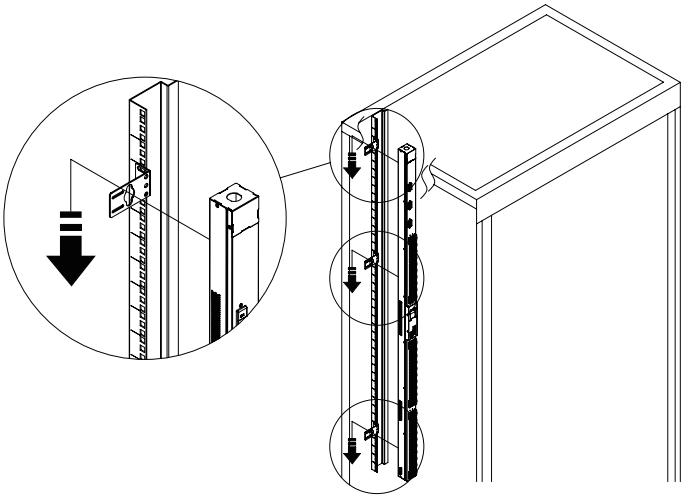

Installation Guide

Method 2

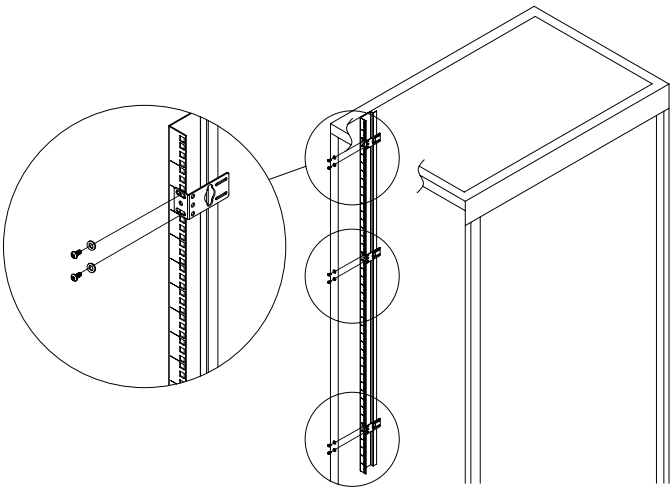

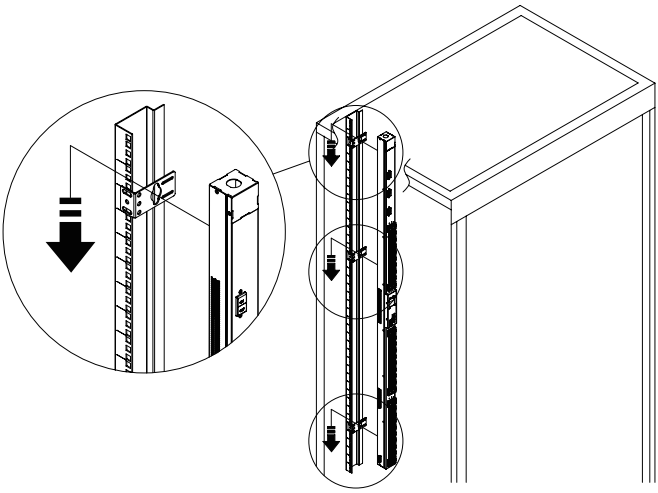

Installation Guide

Method 3

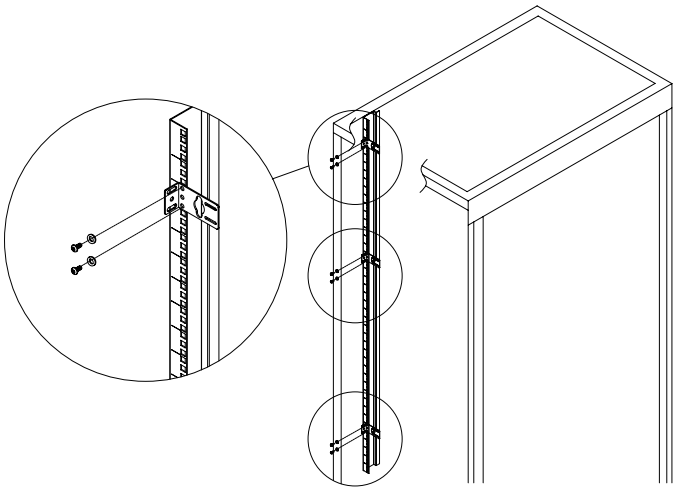

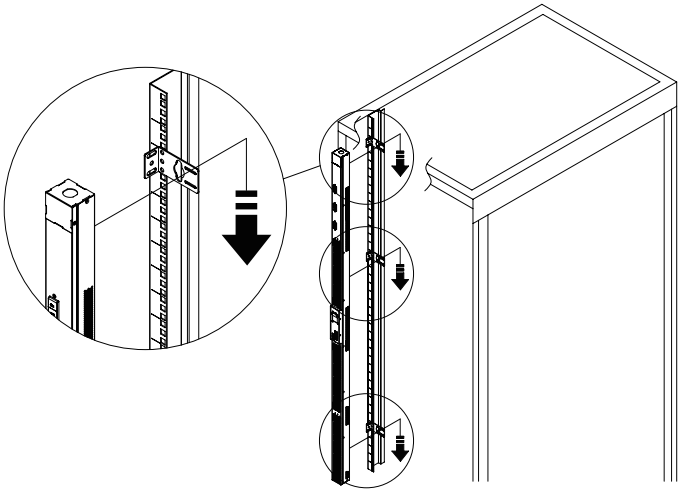

Step 2. Cord Retention Tray Installation (optional)

Adjust the length of the Cord Retention Tray till the screw hole on the Tray and PDU are aligned. Attach the Cord Retention Tray to the PDU with the supplied Cord Retention Tray Mounting Screws. Tighten the Cord Retention Tray with the screw on it.

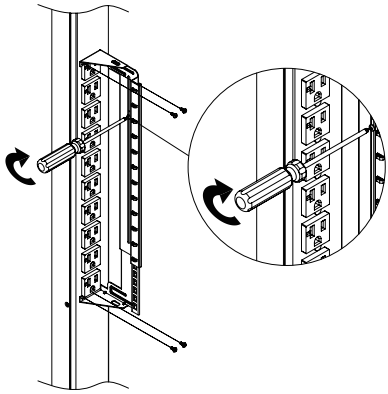

Use the provided Cable Ties to fasten each cord to the Cord Retention Tray.

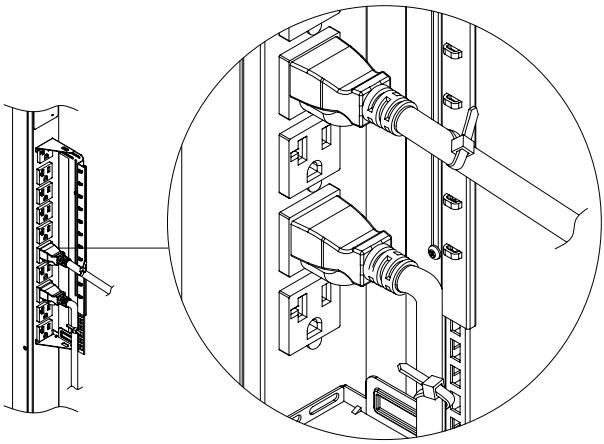

Note: If the PDUs are intended to install in a high temperature environment, please use the Power Cords that could sustain high temperature operation.

Power Cord Direction Change - For Selected PDU Models

Step 1. Remove the four screws from the power cord cover. Keep the screws for later use.

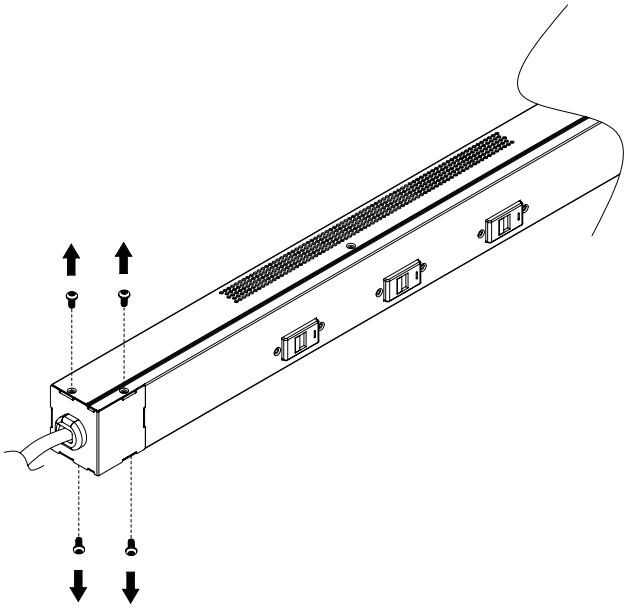

Step 2. Rotate the power cord cover.

Step 3. Install the power cord cover back to the PDU with the four screws.

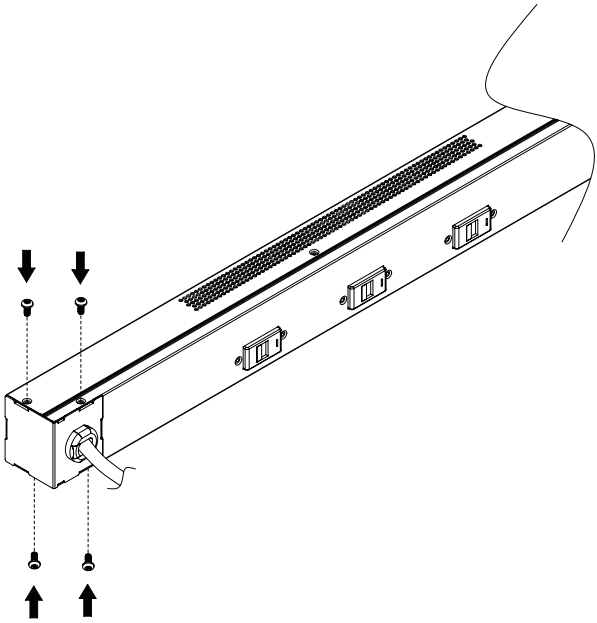

Installation Guide

Locking Power Cord - For IEC Type PDU

Output Power Cord

Step 1. Align and insert the Cable Tie from the upper side of the Fixed Stand and fasten it as shown below.

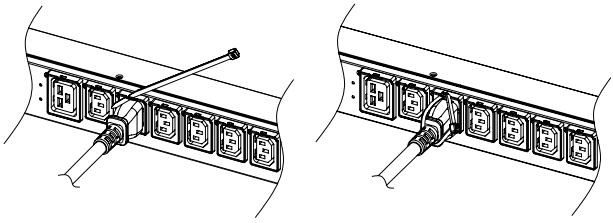

Electrical Installation

Step 1. Receptacle evaluation
Ensure that the plug type of your PDU unit matches the receptacle type that you are using. Plug type may vary by model.

CAUTION!!

The PDU must be plugged into a three-wire, grounded receptacle only. The receptacle must also be connected to an appropriate branch circuit/main with fuse or circuit breaker protection. Connection to any other type of receptacle may result in a shock hazard.

Step 2. Plug the PDU into a compatible AC power source.

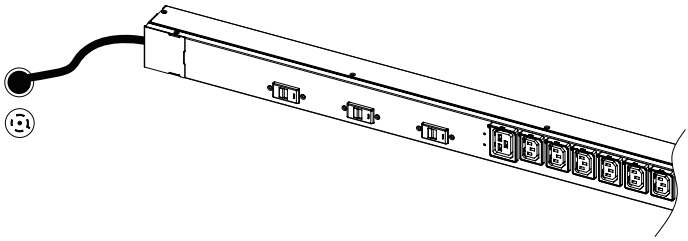

Step 3. Attach equipment
It is extremely important not to exceed the PDUs maximum current load (as outlined in the Specifications section). In order to determine your total load, simply use the LCD screen on the front of the PDU to monitor the load being attached.

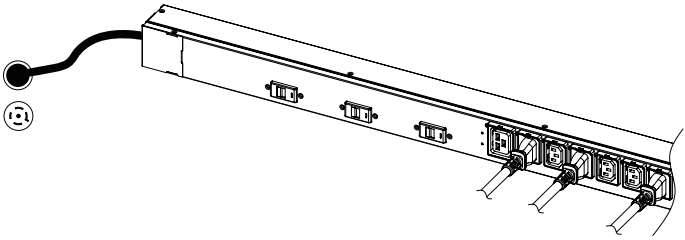

Network Installation

Step 1 – Network Connection
Using an Ethernet cable, attach one end to the Ethernet port on the front of the PDU, and the other end to a network port.

Step 2 – Establish the PDU IP address
Assigning an IP address to the CyberPower PDU requires the user to have an available IP address that is valid on the respective network. If an available IP address is unknown, contact the network administrator to obtain one.

DHCP is enabled by factory default. If the PDU does not receive an IP address from the network's DHCP server, it will default to 192.168.20.177.

There are multiple methods for setting up the IP address on the PDU. Please follow the instructions below for the method that is appropriate for your application.
Please make sure the PDU is powered on during this process.

Option 1: Power Device Network Utility (recommended)

1. Download and install the Power Device Network Utility software from www.cyberpower.com.
2. Open the Power Device Network Utility and select the PDU device from the list and select Tools > Device Setup from the menu.
3. Configure the IP Address, Subnet Mask, and Gateway Address to match your network settings.
4. Enter the user name and password of the PDU device at the Authentication menu.

Note: The default username is "**cyber**" and the default password is "**cyber**".

Option 2: DHCP Server

1. Ask your administrator if there is DHCP server on the LAN.
2. Make sure the DHCP is Enabled.
3. Make sure the network connection is ready and power on the PDU.
4. The PDU will obtain an IP address from the DHCP server automatically.

Option 3: Address Resolution Protocol (ARP) Command

1. Obtain the MAC address from the sticker on the PDU.
2. Open a command prompt as an administrator and type the following:
   "`arp -s [available IP address] [MAC address of PDU]`".
   Example: `arp -s 192.168.20.240  00-0c-15-80-00-01`
   IP Address MAC Address
3. Use the Ping command to assign a size of 123 bytes to the IP.
   * Type in "`ping 192.168.20.240 -l 123`" then press **Enter**.
   * If the replies are received, your computer can communicate with the IP address

Option 4: Hyper Terminal or Terminal Emulator

1. Use the included RJ45/DB9 serial port connection cable, attach one end to the serial port on the front of the PDU, and the other end to the PC/ server.
2. Open the Hyper Terminal software on your PC and select a name and icon for the connection.
3. Setup the COM port settings using the values indicated in Appendix A.
4. Press **Enter** to enter the Authentication menu.
5. Enter the user name and password of the PDU device at the Authentication menu.
6. Press **2** and **Enter** to access Network Settings to view the IP address.

Note: The default username is "**cyber**" and the default password is "**cyber**". For further information and configuration via Hyper Terminal, see Appendix A- Hyper Terminal.

Operation

Remote Management

The remote management function provides monitoring of the PDU operational information, controlling outlets and utilizing SNMP functionality.

Web

Remote management can be performed via web interface. To access the web interface, please follow the instructions below:

1. Enter the IP address of the PDU into a web browser.
2. Enter the user name and password of the PDU device at the authentication screen.

Note: The default username is "**cyber**" and the default password is "**cyber**".

For additional information about the features and functionality of CyberPower Management Console, please refer to the Intelligent PDU Web Interface User's Manual available for download from www.cyberpower.com.

Telnet and SSH

The CyberPower PDU provides Telnet and Secure Shell (SSH) as Remote Management methods. Telnet uses user name and password as basic security while SSH has a higher security level with encryption of the transmitted packets including user name, password, and data. Configure the Setting of Telnet and SSH on the Web Interface. The default user name and password is **cyber**; **cyber**.

SNMP

The CyberPower PDU supports SNMPv1 and SNMPv3 protocols. Download the CyberPower MIB file from www.cyberpower.com and add it to an SNMP-supported management software. Default read/write community is **public/private** for SNMPv1. SNMPv3 provides a higher security level than SNMPv1 by encrypting the transmitted packet. Configure the settings of the SNMPv1/SNMPv3 on Web Interface.

Local Management

LCD Operation

The LCD screen provides instant information, such as voltage, current and power, for the PDU. In addition, users can use the interface to configure each PDU parameters and control each outlet on the Switched PDU. The LCD detects the installation orientation of the PDU (horizontally or vertically), therefore automatically rotates the screen to best fit the reading direction.

A. Scroll Mode: The PDU information will display in following order automatically when "Scroll Mode On" is configured.

Device Information
Phase L1 (input source Wye) , Phase L1-2 (input source Delta)
Phase L2 (input source Wye) , Phase L2-3 (input source Delta)
Phase L3 (input source Wye) , Phase L3-1 (input source Delta)
Voltage (Display if device input source is WYE, and has phase to phase outlet.)
Bank 1-N Information (Displays if device has N circuit breakers)
Environment Status (Displays when the ENVIROSENSOR is connected)
Alert

B. Main Menu Map

Alert	Current	
	Log	
Meter	Device	
	Phase	
	Bank	
	Outlet	
Control	Device	Immediate On
		Delay On
	Phase 1/2/3 or Phase L1-2/L2-3/L3-1	Immediate Off
		Delay Off
	Bank 1-N	Reboot
		Delay Reboot
	Outlet 1-N	
Setting	LCD	Color
		Brightness
		Direction
		Screen off
	Reset	Account (User Name and Password)
		Except TCP
		To Default
	Reboot	
About	Model Name	
	Serial Number	
	Network	
	Daisy Chain (Displays when the PDUs are connected)	
	Hardware Version	
	Firmware Version	

Operation

LED Indicators

Indicator	Status	Description
Status	Green	The PDU status is ok.
	Orange	Warning.
	Red	Critical.
Tx/Rx	Off	The PDU power is off.
	On (Green)	The PDU power is on.
	Flashing	Receiving/transmitting data packet.
		Reset finished.
LINK	On	Indicates the PDU is connected to the LAN.
	Off	Indicates the PDU is not connected to the LAN.
Outlet	On	The outlet is on and providing power.
	Off	The outlet is off.

Environmental Monitoring (optional)

CyberPower PDUs along with the environmental sensor (ENVIROSENSOR) provide temperature and humidity monitoring in a server closet and/or datacenter remotely. To connect the PDU with ENVIROSENSOR, use the RJ45 Ethernet Cable included with the ENVIROSENSOR. Plug one end into the Daisy Chain (In)/ ENVIROSENSOR port on the PDU and the other end into the RJ45 port on the ENVIROSENSOR (as shown in figure below). When the PDU correctly connects to the ENVIROSENSOR, users can see the temperature and humidity data via the Web Interface. For further information regarding ENVIROSENSOR configuration, please refer to the Intelligent PDU Web Interface User's Manual.

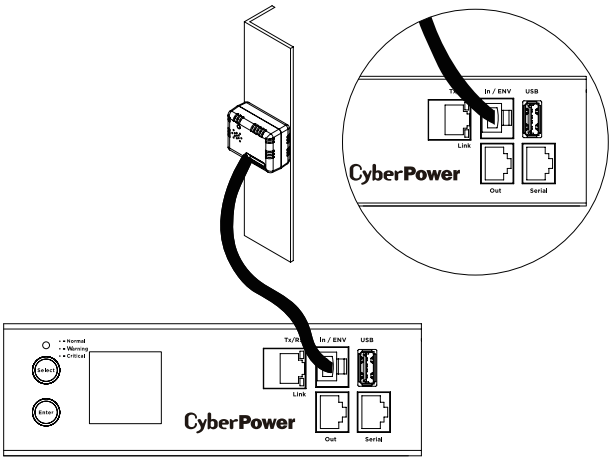

Device Reset

- To locally reset all the settings to default, use Reset function in the LCD screen.
- To remotely reset all the settings to default, log in to the Web interface, enter the Reset page and apply the function.

Unattended/Automatic Shutdown

PowerPanel® Business Edition (Client) software automatically initiates a graceful shutdown on the connected computer's operating system. PowerPanel must be installed on every computer or server for which the shutdown is to take place. The computer will receive a message from the PDU, and will perform the shutdown according to the instructions provided, including shut downs at exact times and dates.

Step 1. Computer Configuration

1. Install PowerPanel® Business Edition Client on every computer or server that will be part of the shutdown process (Follow the instructions in the PowerPanel® Business Edition User Manual).
2. Configure the settings in PowerPanel® Business Edition Client. See the PowerPanel Business® Edition User Manual for detailed instructions.

Step 2. PDU Configuration

Verify that the IP address of all computers that will be part of the shutdown process, are included in the Client List on the web interface.

Step 3. Notification

Notifying the computers of potential outlet shutdown can be accomplished using the following functions:

- Outlets Control Menu: Performing the task of turning off or rebooting outlets.
- Scheduling Menu: Setting the PDU to perform the task of turning off or rebooting outlets. The notification will occur prior to the scheduled date/time.
- Outlet Overload: In the event of PDU overload, notification will be sent prior to the PDU shutting down.

Firmware Upgrade

By upgrading the Firmware, you can obtain new features and updates/improvements to existing functionality. To ensure the firmware is kept up to date, please regularly visit our website to see if there is any updated firmware version available. There are three methods for upgrading the PDU firmware. Please follow the instructions below for the method that is appropriate for your application. There are two files to update in order to upgrade the firmware version:

* cpsmpdumbfw_XXX.bin
* cpsmpdumbdata_XXX.bin

Note that the XXX is not part of the file name but is where the version number in the filename is given.

Prior to performing a firmware update, please:

- Download the latest firmware from www.cyberpower.com.
- Extract the downloaded firmware file to your local “C:\” drive.

Note:

1. The FTP service needs to be enabled before attempting to execute a firmware upgrade.
2. Please do not turn the PDU off when performing the firmware upgrade. PDU outlets will remain powered on while the firmware update takes place. Only the PDU LCD screen will reboot.
3. The PDU LCD screen will reboot during the firmware update process. This DOES NOT cause the PDU outlets to reboot.

Option 1: Single Device Upgrade

Use the following steps to upgrade the firmware.

1. Open a command prompt window and navigate to “C:\”.
2. Login to the PDU with FTP command, type
   - `C:\>ftp`
   - `ftp> open 192.168.22.126 21 (for example: 192.168.22.126 is the current IP of the PDU and 21 is the default ftp port for the PDU)`
   - `Connected to 192.168.22.126.`
   - `220 CyberPower FTP Server Ready.`
   - `User (192.168.22.126:(none)):cyber`
   - `331 User name okay, need password.`
   - `Password:`
   - `230 User logged in, proceed.`
   - `ftp>`
3. Upload the cpsmpdumbfw_XXX.bin, type
   - `ftp > bin`
   - `ftp > put cpsmpdumbfw_XXX.bin`
4. Upgrade complete, type
   - `ftp > quit`
5. The system will reboot after you type "quit". This reboot will take approx. 30 seconds.
6. Login to the PDU via FTP again, type
   - `C:\>ftp`
   - `ftp> open 192.168.22.126 21 (for example: 192.168.22.126 is the current IP of the PDU and 21 is the default ftp port for the PDU)`
   - `Connected to 192.168.22.126.`
   - `220 CyberPower FTP Server Ready.`
   - `User (192.168.22.126:(none)):cyber`
   - `331 User name okay, need password.`
   - `Password:`
   - `230 User logged in, proceed.`
   - `ftp>`
7. Upload cpsmpdumbdata_XXX.bin, type
   - `ftp > bin`
   - `ftp > put cpsmpdumbdata_XXX.bin`

Firmware Upgrade

8. Upgrade complete, type
   - `ftp > quit`
9. The system will reboot after you type “quit”.

Note: You can check to see if the firmware upgrade is successful by checking the “Firmware version” on the [System->About] screen via web UI.

Option 2: Single or Multiple Device Upgrade (recommended)

Use the following steps to upgrade the firmware.

1. Download the **Upgrade and Configuration Utility** from www.cyberpower.com.
2. Open **Upgrade and Configuration Utility** from Start > All Programs > CyberPower Upgrade and Configuration Utility.
3. Wait for search to finish (Shown in Figure 1).

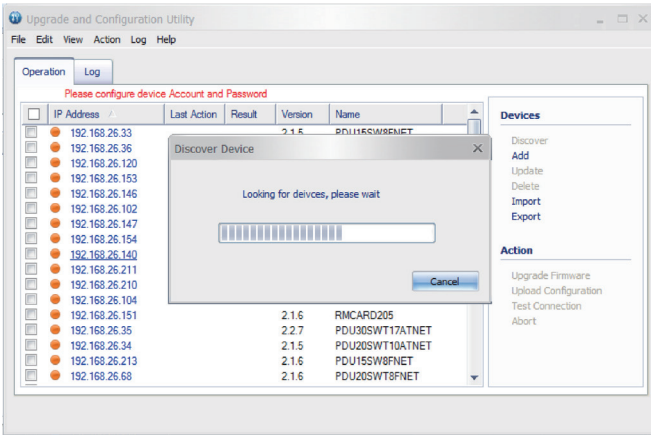

Figure 1

4. Check the checkbox to select devices listed in the **Operation View** (Shown in Figure 2).

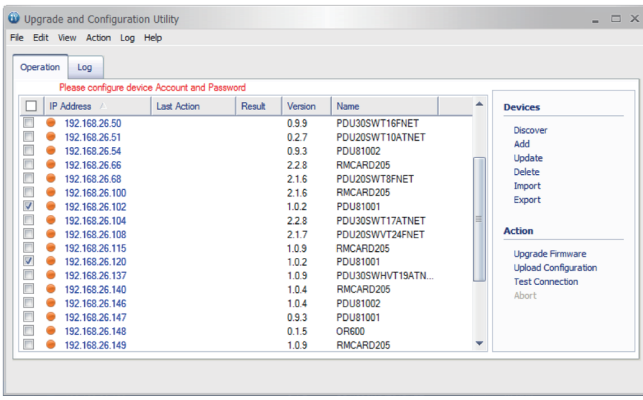

Figure 2

5. Make sure **Account** and **Password** are valid on selected devices (Shown in Figure 3).

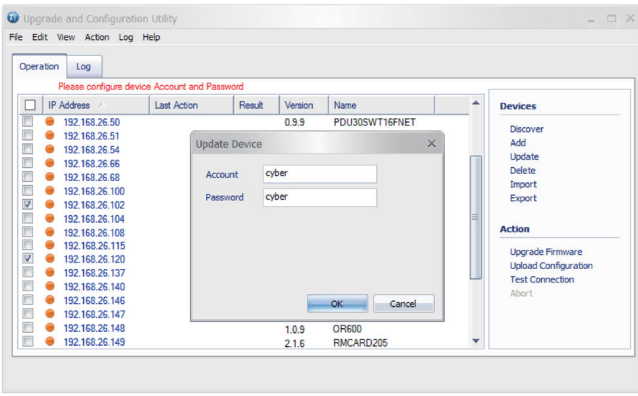

Figure 3

Firmware Upgrade

6. Select **Upgrade Firmware**.
7. Click **Browse** to locate and select the firmware and data file to be updated (Shown in Figure 4).

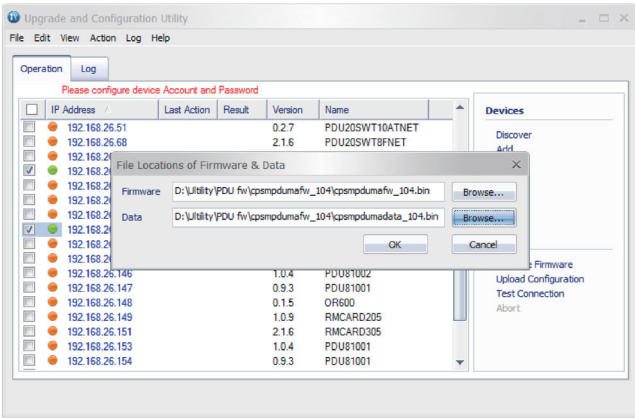

Figure 4

8. Click **OK** in the **Upgrade Firmware** confirmation window (Shown in Figure 5).

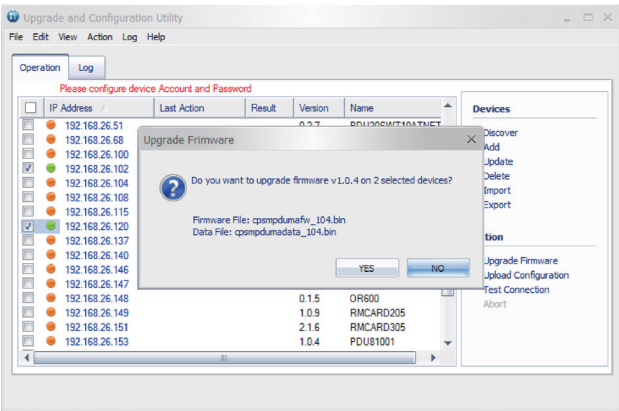

Figure 5

9. The upgrade progress bar will show in **Last Action** column (Shown in Figure 6).

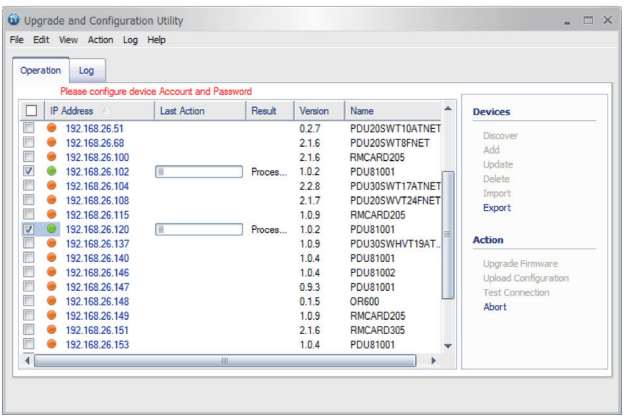

Figure 6

10. The result of firmware upgrade will show in **Result** column (Shown in Figure 7).

Firmware Upgrade

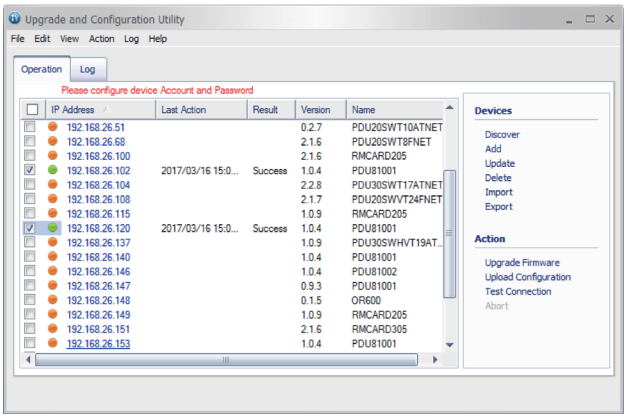

Figure 7

Note: If you don't want to wait for the firmware upgrade, you can stop action by choosing **Abort** in the **Action** menu. However, it's not recommended because **Abort** action may cause the device to malfunction.

Option 3: Use a USB Flash Drive

Use the following steps to upgrade the firmware.

1. Download the latest firmware from www.cyberpower.com.
2. Extract the file to the root directory of a USB flash drive with **FAT32 format**. Please note that the two files below should be available in order to complete the firmware upgrade process:

   * cpsmpdumbdata_xxx.bin
   * cpsmpdumbfw_xxx.bin
3. Plug the USB drive into the PDU USB port and press **Enter** button on the PDU LCD screen to enter **Main Menu**. The USB option will be displayed.

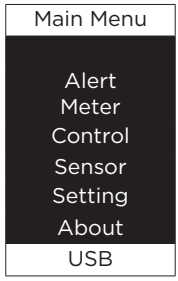

4. Select **USB** and press **Enter** button to enter **Firmware Upgrade** menu.
5. Select **Main** and **Yes** to start the upgrade process.

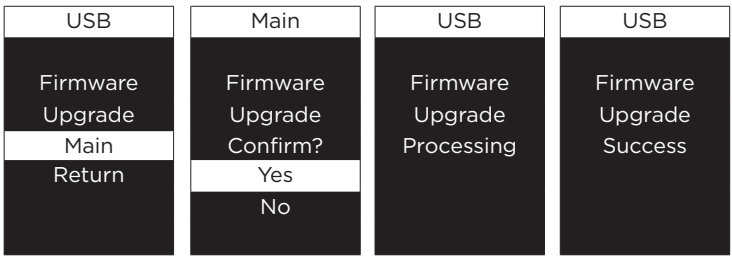

6. The PDU will reboot after the process is completed.

Note: You can check to see if the firmware upgrade is successful by checking the "Firmware version" on the [System->About] screen via web UI.

Troubleshooting

Problem	Possible Cause	Solution
PDU outlets do not provide power to connected equipment	1. Breaker tripped 2. Power cord is not properly plugged in	Reset Breaker, check the plug to insure its connected correctly. If the problem remains, contact technical support.
Amperage displayed on LCD screen exceeds the units capability	Overload	The load indicator shows red when overload. Reduce the load on the PDU until the overload is gone. If the problem remains, contact technical support.
Circuit breakers have tripped	1. Sustained overload 2. Excessive ambient or internal temperatures 3. Faulty breaker	Reset Breaker. If the problem remains, contact technical support.

Conformance Approvals

FCC Warning

WARNING!! Changes or modifications to this unit not expressly approved by the party responsible for compliance could void the user's authority to operate the equipment.

WARNING!! This equipment has been tested and found to comply with the limits for a Class A Digital Device, pursuant to Part 15 of the FCC Rules. These limits are designed to provide reasonable protection against harmful interference in residential installation. This equipment generates, uses and can radiate radio frequency energy and, if not installed and used in accordance with the instruction manual, may cause harmful interference to radio communications.

However, there is no guarantee that interference will not occur in a particular installation. If this equipment does cause harmful interference to radio or television reception, which can be determined by turning the equipment off and on, the user is encouraged to try to correct the interference by one or more of the following measures:

- Reorient or relocate the receiving antenna.
- Increase the separation between the equipment and receiver.
- Connect the equipment into an outlet on a circuit different from that to which the receiver is connected.
- Consult the dealer or an experienced radio/TV technician for help.

Notice: (1) An unshielded-type power cord is required in order to meet FCC emission limits and also to prevent interference to the nearby radio and television reception. It is essential that only the supplied power cord by used. (2) Use only shielded cables to connect I/O devices to this equipment.

Note: THE MANUFACTURER IS NOT RESPONSIBLE FOR ANY RADIO OR TV INTERFERENCE CAUSED BY UNAUTHORIZED MODIFICATIONS TO THIS EQUIPMENT. SUCH MODIFICATIONS COULD VOID THE USER'S AUTHORITY TO OPERATE THE EQUIPMENT.

The Class A digital apparatus meets all requirements of the Canadian Interference-Causing Equipment Regulation.

Cet appareil numerique de la class A respecte toutes les exigencies du Reglement sur le materiel brouilleur du Canada.

European Union

This is a class A product. In a domestic environment this product may cause radio interference in which case the user may be required to take adequate measures.

Customer Service & Warranty

Product Registration

Thank you for purchasing a CyberPower product. Prompt product registration entitles coverage under the Limited Warranty and also allows the opportunity to be notified of product enhancements, upgrades, and other announcements.

Registration is quick and easy at www.cyberpowersystems.com/registration (for USA and Canada) or www.cyberpower.com/registration (for all other regions).

Cyber Power International

Feel free to contact our Tech Support department with installation, troubleshooting, or general product questions.

Cyber Power Systems, Inc.
Web: www.cyberpower.com

For USA and Canada:
4241 12th Ave East, Suite 400 Shakopee, MN55379
Toll-free: (877) 297-6937

For all other regions:
Please visit our website for local contact information.

Limited Warranty

Read the following terms and conditions carefully before using the CyberPower PDU series. By using the Product, you consent to be bound by and become a party to the terms and conditions of this Limited Warranty. If you do not agree to the terms and conditions of this Warranty, you should return the Product for a full refund prior to using it.

Who Is Providing This Warranty?
CyberPower Systems, Inc. provides this Limited Warranty.

What Does This Warranty Cover?
This warranty covers defects in materials and workmanship in the Product under normal use and conditions.

What Is the Period of Coverage?
For USA and Canada, CyberPower provides a 3-Year warranty to the original purchaser who owns the Product. For other regions, please contact your local CyberPower sales team for more information.

Who Is Covered?
This warranty only covers the original purchaser. Coverage ends if you sell or otherwise transfer the Product.

How Do You Get Service?
1. You can use the contact information mentioned above for instructions.
2. When you contact CyberPower, identify the Product and the Purchase Date.
3. You must provide a purchase receipt (or other proof of the original purchase) and provide a description of the defect.

What Will We Do To Correct Problems?
CyberPower will inspect and examine the Product. If the Product is defective in material or workmanship, CyberPower will repair or replace it at CyberPower's expense, or, if CyberPower is unable to or decides not to repair or replace the Product (if defective) within a reasonable time, CyberPower will refund to you the full purchase price you paid for the Product (purchase receipt showing price paid is required).

Who Pays for Shipping?
We pay when we send items to you; you pay when you send items to us.

What Are Some Things This Warranty Does Not Cover?
1. This Warranty does not cover any software that is damaged or needs to be replaced due to the failure of the Product or any data that is lost as a result of the failure or the restoration of data or records, or the re-installation of software.
2. This Warranty does not cover or apply to: misuse, modification, operation or storage outside environmental limits of the Product or the equipment connected to it, nor for damage while in transit or in storage, nor if there has been improper operation or maintenance, or use with items not designed or intended for use with the Product, such as laser printers, appliances, aquariums, medical or life support devices, etc.

What Are the Limitations?
1. This Warranty does not apply unless the Product and the equipment that was connected to it were connected to properly wired and grounded outlets (including compliance with electrical and safety codes of the most current electrical code), without the use of any adapters or other connectors.
2. The Product must have been plugged directly into the power source and the equipment connected to the Product must be directly connected to the Product and not "daisy-chained" together in serial fashion with any extension cords, another Product or device similar to the Product, surge suppressor, or power tap. Any such installation voids the Limited Warranty.
3. The Product and equipment connected to it must have been used properly in a suitable and proper environment and in conformance with any license, instruction manual, or warnings provided with the Product and the equipment connected to it.
4. The Product must have been used at all times within the limitations on the Product's VA capacity.
5. The sole and exclusive remedies of the Initial Customer are those provided by this Warranty.

Appendix A-Hyper Terminal

Hyper Terminal software can be used for basic PDU configuration. In order for Hyper Terminal to interact with the PDU, the PC/server must be connected directly to the PDU via the serial port with the included RJ45/DB9 serial port connection cable. It utilizes a text-based interface and menu system. Navigation through the interface is done by typing the number of the menu option and pressing the Enter key. Setup the COM port settings using the following values.

* Bits per second: 9600
* Data bits: 8
* Parity: None
* Stop bits: 1
* Flow control: None

Note: The session will timeout and logout after 3 minutes of inactivity. Menu options are shown below:

[Main Menu]
1. Outlet Manager (Switched PDU Series Only)
2. Network Settings
3. System Configuration
4. Account Settings
5. Configure System to Default
6. Logout

[Outlet Manager]
1. Outlet Control
2. Outlet Configuration

[Network Setting]
Physical MAC Address: 00-0C-15-40-08-A9
1. System IP: 192.168.24.20
2. Subnet Mask: 255.255.255.0
3. Default Gateway: 192.168.24.254
4. DHCP: Enabled
5. Http Port: 80
6. Http Access: Enabled

[System Configuration]
1. Date (mm/dd/yyyy) : 11/11/2011
2. Time (hh:mm:ss): 17:17:25
3. Name:PDU20SW8FNET
4. Contact: Administrator
5. Location: Server Room

[Account Setting]
1. Administrator
2. Viewer (Web Only)

[Configure System to Default]
Sure to Configure System to Default
1. Yes
2. No

Appendix B-Power Device Network Utility

Overview

The CyberPower Power Device Network Utility is an easy-to-use interface which is used for establishing IP addresses on CyberPower PDU devices.

Installation

Step 1. Download the Power Device Network Utility software from www.cyberpower.com.

Step 2. Select **Next** in the software wizard (Shown in Figure 1).

Figure 1

Step 3. Choose an installation directory. Select **Next** (Shown in Figure 2).

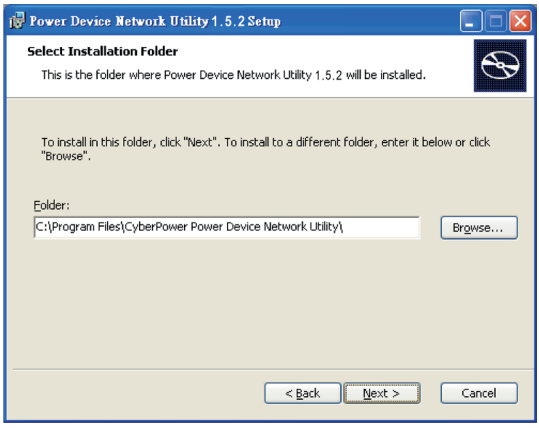

Figure 2

Step 4. Select **Install** to confirm the settings and install (Shown in Figure 3).

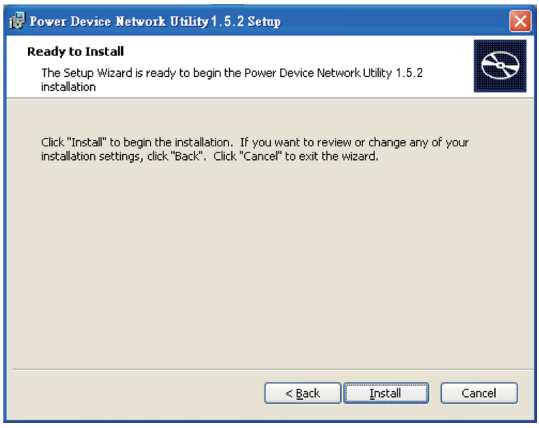

Figure 3

Step 5. Select **Finish** to finalize the installation (Shown in Figure 4).

Figure 4

Appendix B-Power Device Network Utility

Launch Program

To launch the Power Device Network Utility and get started, select Programs from the Start menu in Windows and locate the new folder and icons for Power Device Network Utility. Select Power Device Network Utility from the program folder (Shown in Figure 5).

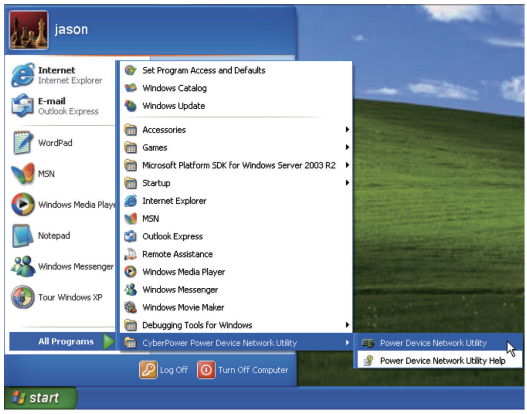

Figure 5. Power Device Network Utility

Getting Started

The Power Device Network Utility scans the network for devices with MAC addresses that match CyberPower network hardware. Once found, the device(s) can then be figured with a specific IP address, subnet mask, and gateway address. This allows the device(s) to function properly on the network and interface with CyberPower Management Console.

Step 1. Select the appropriate PDU device from the Equipment List (Shown in Figure 6).

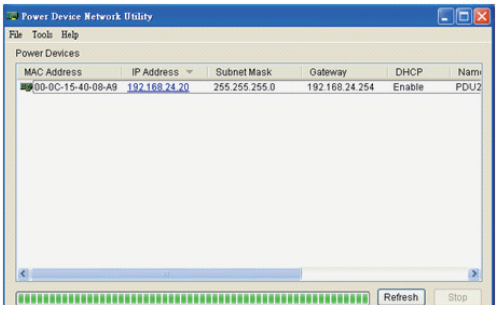

Figure 6. Equipment List

Note: If the PDU does not appear on the list, click the **Refresh** button to rescan the network. If it still does not appear, ensure that the PDU is turned on and was installed correctly.
Pressing **Stop** will cancel the scan/refresh process.

Note: If your computer has a software firewall installed, you may see a Windows Security Alert message (Shown in Figure 7).

In Windows XP SP2, the default firewall alert message is shown as Figure 7. You need to allow the Power Device Network Utility access through the firewall. Click **Unblock** to allow access.

Figure 7. Windows Security Alert

Step 2. Assign a valid IP Address to the PDU

Option 1: Assisted Setup (recommended)

With the appropriate device selected from the Equipment List, open the Network Settings menu (Shown in Figure 8) [Tools=>Device Setup]. In the Device Network Setting Menu, enter a valid IP address, subnet mask, and gateway address to setup the PDU device.

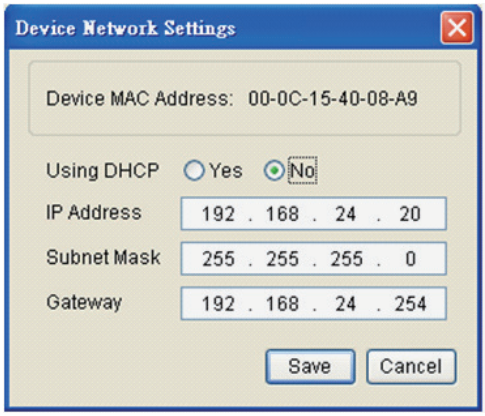

Figure 8. Network Setting Menu (Device Setup)

Note: The DHCP option is not available for all power devices.

Step 3. Authentication

Enter the user name and password of the PDU device at the Authentication menu (Shown in Figure 9).

Note: The default username is "**cyber**" and the default password is "**cyber**".

Figure 9. Authentication screen

Advanced Settings

Timeout Settings

The Timeout Setting (Shown in Figure 10). [Edit=>Timeout Settings] is used to specify the wait time when scanning for network PDU devices. When there are many devices on the local network, it may take extended periods of time to locate all the devices. The timeout function is used to limit the search time.

The default setting is 3 seconds. Valid values are 3 to 60 seconds.

Figure 10. Timeout Setting

Appendix C-PDU Daisy-Chain Function

The daisy-chain function allows up to four PDUs to be connected together to be monitored and controlled from one IP address.

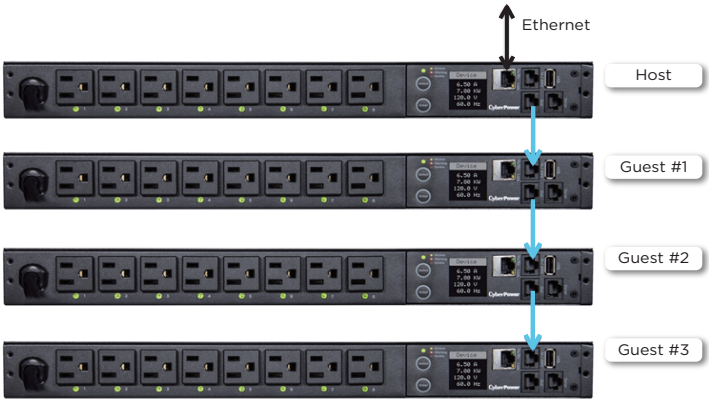

When PDUs are connected, two roles are defined: Host and Guest. Up to three Guest PDUs can be connected to one Host PDU. The Guest PDUs will be recognized by serial number and their order within the daisy-chain.

Note: To perform the daisy-chain function, the firmware version of the connected PDUs needs to be the same (v1.08 or above).

How to connect the PDUs together?

Use one Ethernet cable and connect one end of it to the daisy-chain (Out) port on the Host PDU and the other end to the daisy-chain (In/ENV) port on the Guest 1 PDU to connect the PDUs (as shown below).

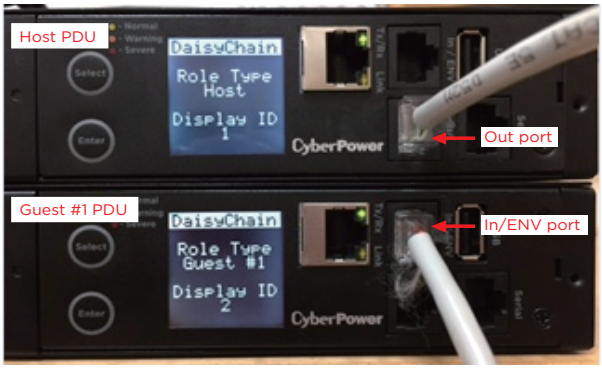

What remote management protocols are supported in PDU daisy-chains?

Currently users can monitor and control daisy-chained PDUs through Web interface (HTTP/HTTPS) or SNMP protocols.

What functions on the Web pages does daisy-chain support?

Please find in below table:

Summary	
PDU	Device Status
	Outlet Status
	Device Manager
	Outlet Manager
	Outlet Control
	Outlet Schedule
Log	Status Records
	Energy Records
	Graphing
System	Identification

Appendix C-PDU Daisy-Chain Function

How to switch between Host and Guest PDUs on the Web interface?

Functionality supported by daisy-chained PDUs will have the Host/ Guest # drop down menu displayed on the Web interface (as shown below).

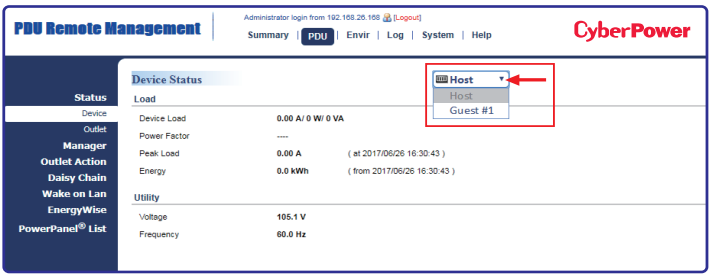

Can I upgrade the firmware version of the Guest PDUs through the Host PDU?

Yes, you can upgrade the firmware using the Upgrade and Configuration Utility, FTP (network connection required), or USB port. Once the Hostcompletes the PDU firmware upgrade, it will trigger its Guest PDUs to upgrade the firmware automatically. It takes about 5 minutes for the Guest PDUs to upgrade, regardless of the number of PDUs in the series.

What will happen if an Ethernet cable is disconnected in the PDU daisy-chain?

For example, if four PDUs are connected and the cable connecting Guest 1 and 2 is disconnected, then Guest 2 and 3 will no longer be detected by the Host PDU. An event showing that Guest 2 and 3 are removed will be recorded in the Host PDU. Meanwhile, Guest 2 and 3 will create a new daisy-chain where Guest 2 becomes a Host and Guest 3 becomes Guest 1 to the new Host.

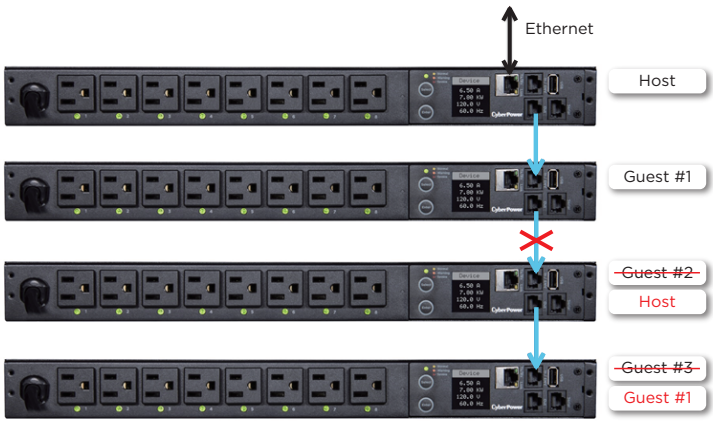

In the above example, if the disconnected Ethernet cable is re-connected, will the role of the PDUs stay the same?

Yes, when the disconnected cable between Guest 1 and 2 is re-connected, Guest 2 and 3 will revert to their previous roles.

What happens if one PDU in the daisy-chain is powered off?

For example, if four PDUs are connected and Guest 1 is powered o, an event showing that Guest 1, 2 and 3 are removed will be recorded in the Host PDU. Guest 2 and 3 will not create another daisy-chain.

Does the Host PDU record the logs of the Guest PDUs and itself?

Yes, the Host PDU records the logs from all Guest PDUs daisy-chained to it.

Will the Logs of the Guest PDUs recorded in the Host PDU be cleared if the Guest PDUs are removed from the Host PDU?

No, the Logs of the Guest PDUs will remain even after the Guest PDUs are removed.

Appendix C-PDU Daisy-Chain Function

Does the Host PDU record the Status Records of the Guest PDUs and itself?

Yes, the Host PDU records the Status Records for all the PDUs in the daisy-chain.

Will the Status Records of the Guest PDUs logged in the Host PDU be cleared if the Guest PDUs are disconnected from the Host PDU?

Yes, once the Guest PDUs are removed, the Status Records logged in the Host PDU will be cleared. As long as the Host PDU does not connect to other PDUs, the Status Records of the disconnected PDU can be displayed when it is re-connected to the Host PDU. If the Host PDU connects to dierent PDUs, the Status Records of the removed PDU will be entirely cleared.

Are the Guest PDUs able to connect to the network when they are daisy-chained?

Yes, even when the PDUs are daisy-chained, the Guest PDUs are able to connect to the network directly. Note that a Guest PDU will require having its own Ethernet cable connected to the network.

What will happen if a 5th PDU is added to a daisy-chain?

The maximum number of PDUs that can be connected in one daisy-chain is 4. The daisy-chain functionality will not work until the fifth PDU is removed.

What is the maximum recommended length of the Ethernet cable to daisy-chain the PDUs?

50 ft (15 m)

Troubleshooting

Problem	Possible Cause	Solution
The PDUs are connected but the daisy-chain function is not working.	- The firmware version does not support daisy-chain. - The PDUs have dierent firmware versions.	Check the firmware version of each PDU and upgrade it to v1.08 or above.
I cannot set the EnergyWise configuration on a Guest PDU.	Only the Host PDU supports EnergyWise.	N/A
I cannot set the WoL for Guest PDUs.	Only the Host PDU supports WoL.	N/A

CyberPower

Cyber Power Systems, Inc.

www.cyberpower.com

Copyright © 2019 Cyber Power Systems, Inc. All rights reserved. K01-0000699-00