CyberPower®

User's Manual

BPSE24V40ART2U
BPSE48V40ART2U
BPSE72V30ART2U
BPSE72V40ART2U
BPSE72V30ART2U-B
BPSE72V40ART2U-B
BPSE72V40ART2U-S

Cyber Power Systems, Inc.
www.cyberpower.com

K01-C000610-04

TABLE OF CONTENTS

IMPORTANT SAFETY INSTRUCTIONS **1**

UNPACKING **2**

OVERVIEW **3**

FRONT/REAR PANEL DESCRIPTION 3

HARDWARE INSTALLATION **4**

RACKMOUNT INSTALLATION 4

VERTICAL/TOWER INSTALLATION 5

BATTERY PACK REPLACEMENT 6

TECHNICAL SPECIFICATIONS **8**

IMPORTANT SAFETY INSTRUCTIONS

This manual contains important instructions. Please read and follow all instructions carefully during installation and operation of the unit. Read this manual thoroughly before attempting to unpack, install, or operate the Battery modules.

CAUTION! The UPS unit must be connected to a grounded AC power outlet with fuse or circuit breaker protection. The Battery modules grounded are through the UPS.

CAUTION! The battery can power hazardous components inside the unit, even when the AC input power is disconnected.

CAUTION! To prevent the risk of fire or electric shock, install in a temperature and humidity controlled indoor area, free of conductive contaminants. (Please see specifications for acceptable temperature and humidity range).

CAUTION! (No User Serviceable Parts): Risk of electric shock, do not remove cover. No user serviceable parts inside. Refer servicing to qualified service personnel.

CAUTION! (Non-Isolated Battery Supply): Risk of electric shock, battery circuit is not isolated from AC power source; hazardous voltage may exist between battery terminals and ground. Test before touching.

CAUTION! Wiring must be done by qualified personnel.

CAUTION! DO NOT USE WITH OR NEAR AQUARIUMS! To reduce the risk of fire, do not use with or near aquariums. Condensation from the aquarium can come in contact with metal electrical contacts and cause the machine to short out.

CAUTION! Do not dispose of batteries in fire as the battery may explode.

CAUTION! Do not open or mutilate the battery, released electrolyte is harmful to the skin and eyes.

CAUTION! A battery can present a risk of electric shock and high short circuit current. The following precaution should be observed when working on batteries.

- Remove watches, rings or other metal objects.
- Use tools with insulated handles.

CAUTION! Make sure everything is turned off and disconnected completely before conducting any maintenance, repairs or shipment.

CAUTION! Connect the Protection Earth (PE) safety conductor before any other cables are connected.

DO NOT INSTALL THE UNIT WHERE IT WOULD BE EXPOSED TO DIRECT SUNLIGHT OR NEAR A STRONG HEAT SOURCE!

SERVICING OF BATTERIES SHOULD BE PERFORMED OR SUPERVISED BY PERSONNEL KNOWLEDGE OF BATTERIES AND THE REQUIRED PRECAUTIONS. KEEP UNAUTHORIZED PERSONNEL AWAY FROM BATTERIES!

UNPACKING

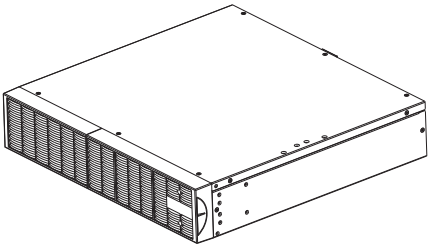

Battery module

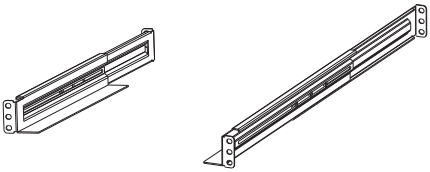

Rackmount rails (2)



User's manual



Battery cable

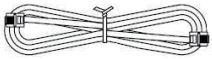

Phone cable



Flat head screws: M4X8L (8)



Pan head screws: M5X12L (12)



Plastic washers (12)



Screw hole dust covers (8)

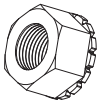

M5 nut (8)

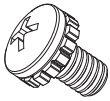

Machine screw with round washer: M4X8L (6)

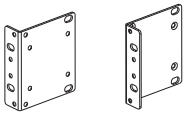

Rackmount ears (Stands) (2)

FRONT/REAR PANEL DESCRIPTION

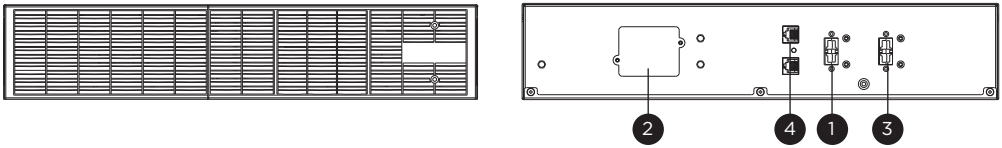

BPSE24V40ART2U/BPSE48V40ART2U/BPSE72V30ART2U/BPSE72V40ART2U/
BPSE72V30ART2U-B/BPSE72V40ART2U-B/BPSE72V40ART2U-S

1. Input Connector
Use this input connector to connect the Battery module to the Power module or to the next Battery module.

2. On-board Replaceable Fuse Cover
Replaceable fuse is accessible from the rear panel. It must be done by qualified personnel.

3. Output Connector
Use this output connector to daisy chain the next Battery module. Remove the connector cover for access.

4. Automatic Detection of Extended Battery Module Connector
Connect to UPS for automatic detection of Battery modules.

CONNECTION 1: POWER MODULE WITH ONE BATTERY MODULE

⚠ **Wiring must be done by qualified personnel.**

⚠ **Connect the Protection Earth (PE) safety conductor before any other cables are connected.**

Use the battery cable of the Battery module to connect the Battery module to the Power module.

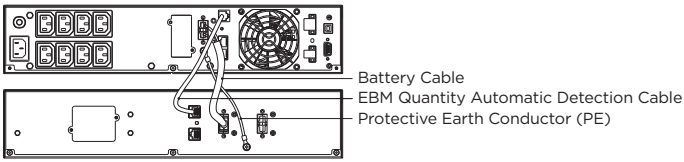

CONNECTION 2: POWER MODULE WITH MULTIPLE BATTERY MODULES

⚠ **Wiring must be done by qualified personnel.**

⚠ **Connect the Protection Earth (PE) safety conductor before any other cables are connected.**

Step 1: Connect the first Battery module to the Power module via battery cable.
Step 2: Use the battery cable to connect the second Battery module to the first Battery module.

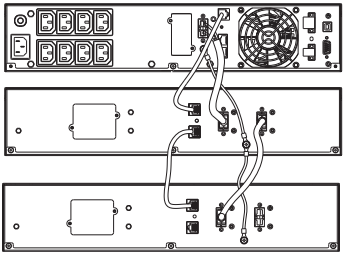

HARDWARE INSTALLATION

These Battery modules can be mounted in a rackmount or vertical tower orientation. This versatility is especially important to growing organizations with changing needs that value having the option to position a Battery module on a floor or in a rackmount system. Please follow the instructions below for the respective mounting methods.

CAUTION! To prevent the risk of fire or electric shock, only use the supplied hardware to attach the mounting brackets.

RACKMOUNT INSTALLATION

Step 1: Rackmount ears installation
Attach the two rackmount ears to Battery module using the provided screws M4X8L*8pcs.

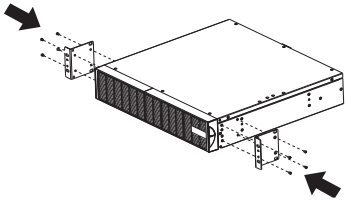

Step 2: Rackmount rails installation
(1) The rails adjust to mount in 48-cm (19-inch) panel racks from 46.4 to 73.8cm (18.3 to 29 inches) deep. Select the proper holes in the rack for positioning the Battery module in the rack. The rails take up position 1 through position 3.

(2) Attach the rackmount rail to your rack with two M5X12L screws, two plastic washers, and two M5 nuts at the front of the rack. (Located in position 1 & position 3; It can also be located in position 1 & position 2 or position 2 & position 3 alternatively). Do not tighten the screws. Adjust the rail length on the rail assembly of your rack. Secure the rail to the rear of the rack with two M5X12L screws, two plastic washers, and two M5 nuts. Tighten all screws at the front and rear of the rail. Once completed, perform the same steps for assembling the other rackmount rail.

(1)

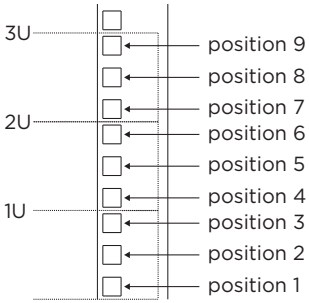

(2)

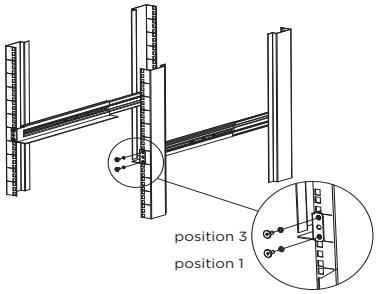

Step 3: Install the Battery module on the rack
Place the Battery module onto the rackmount rails with the front of the unit facing you. Secure the Battery module to your rack with four M5X12L screws at the front of the rack. (Located in position 2 & position 5).

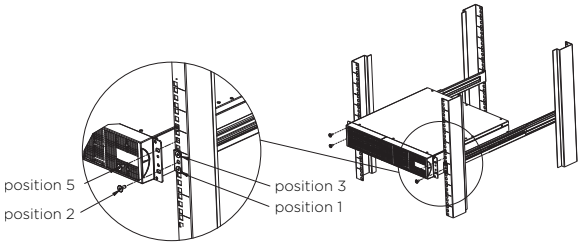

VERTICAL/TOWER INSTALLATION

Step 1: Attach the base stands
Tighten the screws (M4X8L*8pcs) of the base stands (rackmount ears) onto the bottom of the Battery module.

Step 2: Attach dust covers
Insert dust covers into the rackmount ear screw holes that are not being used.

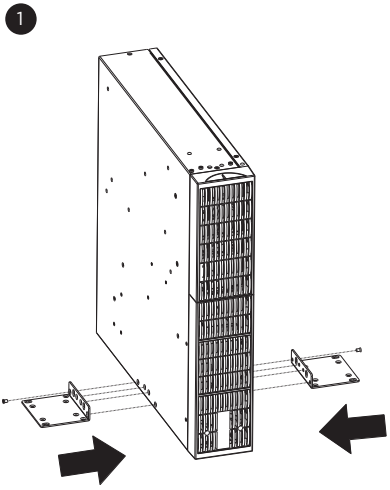

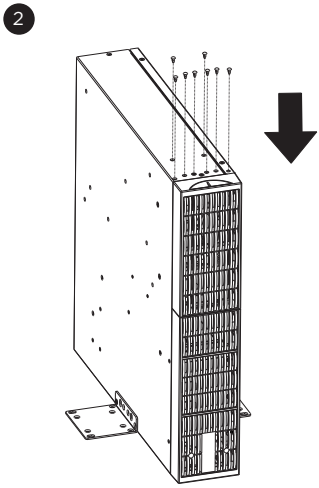

BATTERY PACK REPLACEMENT

• The steps below apply to BPSE24V40ART2U, BPSE48V40ART2U, and BPSE72V40ART2U models.

Step 1: Unscrew the top cover and separate the top cover from the Battery module.

Step 2: Unscrew the metal bars and separate the steel bars from the Battery module.

Step 3: Disconnect the connector between battery pack and the rear panel.

Step 4: Remove the battery pack from the Battery module.

Step 5: Install the new battery pack into the UPS, connect the battery connectors, and then reinstall the metal bars and top cover.

1

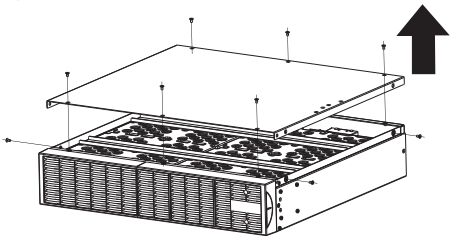

2

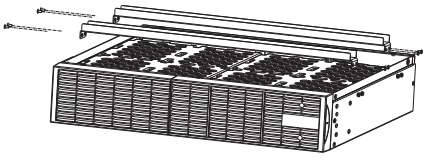

3

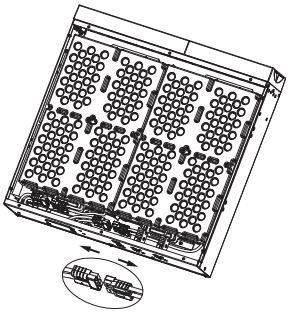

4

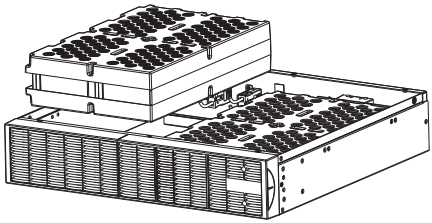

5

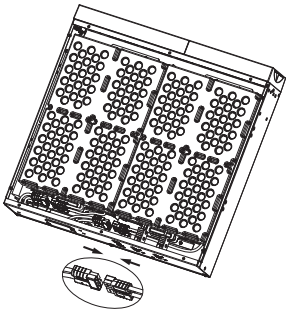

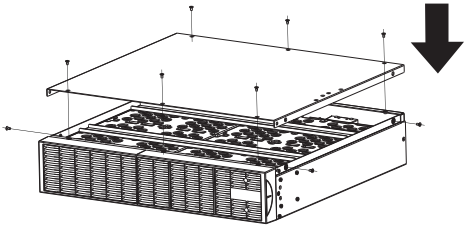

BATTERY PACK REPLACEMENT

• The steps below apply to BPSE72V30ART2U, BPSE72V30ART2U-B and BPSE72V40ART2U-B models.

Step 1: Loosen the two screws on each of the left and right panels, then remove the panels.

Step 2: Disconnect the battery connectors.

Step 3: Loosen the three screws on each side to remove the battery compartment covers.

Step 4: Pull the battery packs out slowly and then put the new battery packs into the compartment. (When replacing the battery pack, it is recommended to lift the battery cable to make the replacement easier.)

Step 5: Reinstall the battery compartment covers by tightening six screws. Connect the battery connector and secure onto the battery compartment cover. Please make sure the connection is properly seated.

Step 6: Reinstall the left and right panels, and secure each side with two screws.

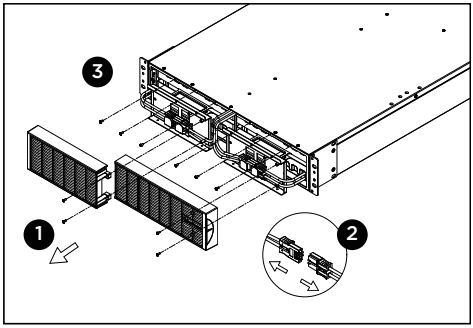

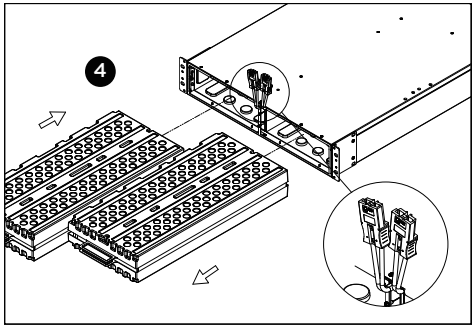

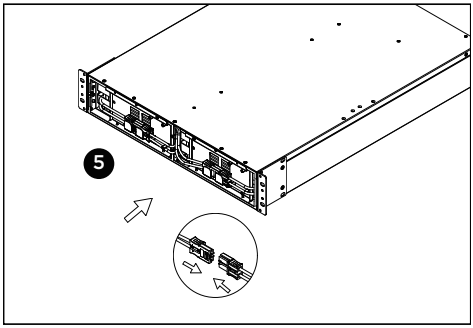

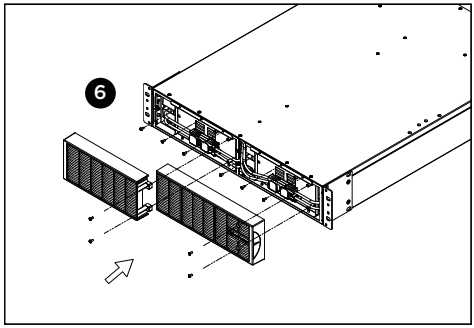

TECHNICAL SPECIFICATIONS

Models	BPSE24V40ART2U	BPSE48V40ART2U	BPSE72V40ART2U
Battery			
Specifications	12V x 2pcs x 2 sets	12V x 4pcs x 2 sets	12V x 6pcs x 2 sets
Rated Battery Voltage	24V	48V	72V
Overload Protection	Fuse		
Physical			
Dimension (WxHxD)mm	438 x 88 x 430	438 x 88 x 430	438 x 88 x 610
Net Weight (kg)	16.3	26.7	39.4
Environment			
Operating Temperature	32°F to 104°F (0°C to 40°C)		
Operating Relative Humidity	20 to 90% Non-Condensing		

Models	BPSE72V30ART2U	BPSE72V30ART2U-B	BPSE72V40ART2U-B
Battery			
Specifications	12V x 6pcs x 2 sets		
Rated Battery Voltage	72V		
Overload Protection	Fuse		
Physical			
Dimension (WxHxD)mm	438 x 86 x 610		
Net Weight (kg)	28.9	36.0	40.6
Environment			
Operating Temperature	32°F to 104°F (0°C to 40°C)		
Operating Relative Humidity	20 to 90% Non-Condensing		

Cyber Power Systems, Inc.

www.cyberpower.com

11F., No.26, Jinzhuang Rd., Neihu Dist., Taipei City 114, Taiwan

Entire contents copyright © 2026 Cyber Power Systems, Inc. All rights reserved. Reproduction in whole or in part without permission is prohibited. PowerPanel® Business and PowerPanel® Personal are trademarks of Cyber Power Systems, Inc.

