

Motherboard

PRO H310M-R R2.0 WI-FI

PRO H310M-R R2.0 WI-FI/CSM

E14979
First Edition
January 2019

Copyright © 2019 ASUSTeK COMPUTER INC. All Rights Reserved.

No part of this manual, including the products and software described in it, may be reproduced, transmitted, transcribed, stored in a retrieval system, or translated into any language in any form or by any means, except documentation kept by the purchaser for backup purposes, without the express written permission of ASUSTeK COMPUTER INC. (“ASUS”).

Product warranty or service will not be extended if: (1) the product is repaired, modified or altered, unless such repair, modification of alteration is authorized in writing by ASUS; or (2) the serial number of the product is defaced or missing.

ASUS PROVIDES THIS MANUAL “AS IS” WITHOUT WARRANTY OF ANY KIND, EITHER EXPRESS OR IMPLIED, INCLUDING BUT NOT LIMITED TO THE IMPLIED WARRANTIES OR CONDITIONS OF MERCHANTABILITY OR FITNESS FOR A PARTICULAR PURPOSE. IN NO EVENT SHALL ASUS, ITS DIRECTORS, OFFICERS, EMPLOYEES OR AGENTS BE LIABLE FOR ANY INDIRECT, SPECIAL, INCIDENTAL, OR CONSEQUENTIAL DAMAGES (INCLUDING DAMAGES FOR LOSS OF PROFITS, LOSS OF BUSINESS, LOSS OF USE OR DATA, INTERRUPTION OF BUSINESS AND THE LIKE), EVEN IF ASUS HAS BEEN ADVISED OF THE POSSIBILITY OF SUCH DAMAGES ARISING FROM ANY DEFECT OR ERROR IN THIS MANUAL OR PRODUCT.

SPECIFICATIONS AND INFORMATION CONTAINED IN THIS MANUAL ARE FURNISHED FOR INFORMATIONAL USE ONLY, AND ARE SUBJECT TO CHANGE AT ANY TIME WITHOUT NOTICE, AND SHOULD NOT BE CONSTRUED AS A COMMITMENT BY ASUS. ASUS ASSUMES NO RESPONSIBILITY OR LIABILITY FOR ANY ERRORS OR INACCURACIES THAT MAY APPEAR IN THIS MANUAL, INCLUDING THE PRODUCTS AND SOFTWARE DESCRIBED IN IT.

Products and corporate names appearing in this manual may or may not be registered trademarks or copyrights of their respective companies, and are used only for identification or explanation and to the owners’ benefit, without intent to infringe.

Offer to Provide Source Code of Certain Software

This product contains copyrighted software that is licensed under the General Public License (“GPL”), under the Lesser General Public License Version (“LGPL”) and/or other Free Open Source Software Licenses. Such software in this product is distributed without any warranty to the extent permitted by the applicable law. Copies of these licenses are included in this product.

Where the applicable license entitles you to the source code of such software and/or other additional data, you may obtain it for a period of three years after our last shipment of the product, either

(1) for free by downloading it from http://support.asus.com/download

or

(2) for the cost of reproduction and shipment, which is dependent on the preferred carrier and the location where you want to have it shipped to, by sending a request to:

ASUSTeK Computer Inc.
Legal Compliance Dept.
15 Li Te Rd.,
Beitou, Taipei 112
Taiwan

In your request please provide the name, model number and version, as stated in the About Box of the product for which you wish to obtain the corresponding source code and your contact details so that we can coordinate the terms and cost of shipment with you.

The source code will be distributed WITHOUT ANY WARRANTY and licensed under the same license as the corresponding binary/object code.

This offer is valid to anyone in receipt of this information.

ASUSTeK is eager to duly provide complete source code as required under various Free Open Source Software licenses. If however you encounter any problems in obtaining the full corresponding source code we would be much obliged if you give us a notification to the email address **gpl@asus.com**, stating the product and describing the problem (please DO NOT send large attachments such as source code archives, etc. to this email address).

Contents

Safety information iv
About this guide iv
Package contents vi
PRO H310M-R R2.0 WI-FI specifications summary vi

Chapter 1: Product introduction

Motherboard overview 1-1
Central Processing Unit (CPU) 1-7
System memory 1-8

Chapter 2: BIOS information

BIOS setup program 2-1
BIOS menu screen 2-2
Exit menu 2-3

Appendix

Notices A-1
ASUS contact information A-7

Safety information

Electrical safety

- To prevent electrical shock hazards, disconnect the power cable from the electrical outlet before relocating the system.
- When adding or removing devices to or from the system, ensure that the power cables for the devices are unplugged before the signal cables are connected. If possible, disconnect all power cables from the existing system before you add a device.
- Before connecting or removing signal cables from the motherboard, ensure that all power cables are unplugged.
- Seek professional assistance before using an adapter or extension cord. These devices could interrupt the grounding circuit.
- Ensure that your power supply is set to the correct voltage in your area. If you are not sure about the voltage of the electrical outlet you are using, contact your local power company.
- If the power supply is broken, do not try to fix it by yourself. Contact a qualified service technician or your retailer.

Operation safety

- Before installing the motherboard and adding components, carefully read all the manuals that came with the package.
- Before using the product, ensure all cables are correctly connected and the power cables are not damaged. If you detect any damage, contact your dealer immediately.
- To avoid short circuits, keep paper clips, screws, and staples away from connectors, slots, sockets and circuitry.
- Avoid dust, humidity, and temperature extremes. Do not place the product in any area where it may be exposed to moisture.
- Place the product on a stable surface.
- If you encounter technical problems with the product, contact a qualified service technician or your retailer.

About this guide

This user guide contains the information you need when installing and configuring the motherboard.

How this guide is organized

This guide contains the following parts:

- **Chapter 1: Product introduction**

  This chapter describes the features of the motherboard and the new technology it supports. It includes descriptions of the switches, jumpers, and connectors on the motherboard.

- **Chapter 2: BIOS information**

  This chapter discusses changing system settings through the BIOS Setup menus. Detailed descriptions for the BIOS parameters are also provided.

Where to find more information

Refer to the following sources for additional information and for product and software updates.

1. **ASUS websites**

   The ASUS website provides updated information on ASUS hardware and software products. Refer to the ASUS contact information.

2. **Optional documentation**

   Your product package may include optional documentation, such as warranty flyers, that may have been added by your dealer. These documents are not part of the standard package.

Conventions used in this guide

To ensure that you perform certain tasks properly, take note of the following symbols used throughout this manual.



DANGER/WARNING: Information to prevent injury to yourself when completing a task.



CAUTION: Information to prevent damage to the components when completing a task.



IMPORTANT: Instructions that you MUST follow to complete a task.



NOTE: Tips and additional information to help you complete a task.

Typography

Bold text	Indicates a menu or an item to select.
Italics	Used to emphasize a word or a phrase.
<Key>	Keys enclosed in the less-than and greater-than sign means that you must press the enclosed key. Example: <Enter> means that you must press the Enter or Return key.
<Key1> + <Key2> + <Key3>	If you must press two or more keys simultaneously, the key names are linked with a plus sign (+).

Package contents

Check your motherboard package for the following items.

Motherboard	ASUS PRO H310M-R R2.0 WI-FI motherboard
Cables	2 x Serial ATA 6.0 Gb/s cables
Accessories	1 x ASUS I/O Shield 1 x 1T1R Wi-Fi antennas (Wi-Fi 802.11a/b/g/n/ac compliant)
Application DVD	Support DVD
Documentation	User Guide

If any of the above items are damaged or missing, contact your retailer.

PRO H310M-R R2.0 WI-FI specifications summary

Chipset	Intel® H310 Chipset
Memory	2 x DIMMs, max 32GB, DDR4 2666 / 2400 / 2133 MHz, non-ECC, un-buffered memory Dual-channel memory architecture Supports Intel® Extreme Memory Profile (XMP) *** The maximum memory frequency supported varies by processor.** **** DDR4 2666MHz and higher memory modules will run at max. 2666MHz on Intel® 8th Gen. 6-core or higher processors.** ***** Refer to www.asus.com for the Memory QVL (Qualified Vendors List).**
Expansion slots	1 x PCI Express 3.0/2.0 x16 slot (at x16 mode) 1 x PCI Express 2.0 x1 slot
CPU	LGA1151 socket for Intel® 8th Generation Core™ i7 / i5 / i3, Pentium®, and Celeron® processors Supports Intel® 14nm CPU Supports Intel® Turbo Boost Technology 2.0* *** The Intel® Turbo Boost Technology 2.0 support depends on the CPU types.** **** Refer to www.asus.com for Intel® CPU support list.**
Graphics	Integrated graphics processor - Intel® HD Graphics support Multi-VGA out support: HDMI / DisplayPort / D-Sub ports - Supports HDMI 1.4b output with a maximum resolution of 4096 x 2304 @24Hz - Supports DisplayPort output with a maximum resolution of 4096 x 2340 @60Hz - Supports D-Sub output with a maximum resolution of 1920 x 1200 @60Hz Supports up to 2 displays simultaneously Maximum shared memory of 1024MB
Storage	Intel® H310 Chipset: - 4 x SATA 6.0 Gb/s ports (gray)
LAN	Realtek® 8111H Gigabit LAN supports LANGuard
USB	ASM3142IC - 1 x USB 3.1 Gen2 port (Type C port at mid-board) Intel® H310 Chipset: - 4 x USB 3.1 Gen 1 ports (2 ports at mid-board, 2 ports at back panel) - 4 x USB 2.0/1.1 ports (2 ports at mid-board; 2 ports at back panel)

(continued on the next page)

PRO H310M-R R2.0 WI-FI specifications summary

Wireless Data Network	Wi-Fi 802.11a/b/g/n/ac support dual frequency band 2.4/5 Ghz support up to 433.3 Mbps* *Actual speed varies, and depends on networking conditions
Bluetooth	Bluetooth v5.0
Audio	Realtek® ALC887 8-channel High Definition Audio CODEC* - Supports jack-detection and front panel jack-retasking *** Choose the chassis with HD audio module in the front panel to support an 8-channel audio output.**
ASUS special features	**Bespoke Motherboard Design & Business Focused Features :** - ASUS Self Recovering BIOS: Automatically recover BIOS update once crash happen. - ASUS Event Log: Record activities of system and provides information in BIOS. - ASUS Commercial BIOS kit: Speed up BIOS update solutionby partial BIOS design. - Anti-Moisture: Against moisture and corrosion — prolonging the life of your motherboard. -24/7 Reliability: Tested under temperature up to 45°C and humidity up to 80% to ensure handle diverse environment. - Overcurrent Protection: Short circuit prevention, protects your system **Easy Assembly Design :** - Fixed-position&Color-coded Connectors: Enable easy identification and cable-matching, speeding up the production line. - Box Headers: USB headers are box style, enabling fast connector installation and preventing pin damage.
Rear panel I/O ports	1 x PS/2 keyboard (purple) port 1 x PS/2 mouse (green) port 2 x USB 3.1 Gen 1 (up to 5Gbps) ports (Type-A, blue) 2 x USB 2.0/1.1 ports 1 x HDMI port 1 x D-Sub port 1 x Display port 2 x Wi-Fi antenna port(s) 1 x LAN (RJ-45) port 3 x Audio jacks support 8-channel audio output* *** Use a chassis with HD audio module in the front panel to support a 8-channel audio output.**
Internal connectors	1 x USB 3.1 Gen 2 (up to 10Gbps) connector supporting an additional 1 USB 3.1 Gen 2 port (Type-c) 1 x USB 3.1 Gen 1 (up to 5Gbps) connector supporting an additional 2 USB 3.1 Gen 1 ports (19-pin) 1 x USB 2.0/1.1 connector supporting a additional 2 USB 2.0/1.1 ports 4 x SATA 6.0Gb/s connectors 1 x 4-pin CPU Fan connector for 4-pin PWM mode 1 x 4-pin Chassis Fan connector for 4-pin PWM mode

(continued on the next page)

PRO H310M-R R2.0 WI-FI specifications summary

Internal connectors	1 x COM connector 1 x Front panel audio connector (AAFP) 1 x Speaker connector 1 x Chassis Intrusion header 1 x 24-pin EATX Power connector 1 x 4-pin ATX 12V Power connector 1 x System panel connector 1 x Clear CMOS jumper (2-pin) 1 x LPC Debug header 1 x SPI TPM header
BIOS features	128 Mb Flash ROM, UEFI AMI BIOS, PnP, SM BIOS 3.0, ACPI 6.1, Multi-language BIOS, Multi-language BIOS, ASUS smart recovering BIOS, ASUS Event lg, ASUS Commercial Kit
Manageability	WfM 2.0, DMI 2.0, WOL by PME, PXE
Support DVD	Drivers ASUS utilities EZ Update Anti-virus software (OEM version)
OS support	Windows® 10 (64-bit)
Form factor	uATX Form Factor 8.9”*7.1” (22.60 cm*18.03 cm)

Specifications are subject to change without notice.

Product introduction

1

Motherboard overview

- Unplug the power cord from the wall socket before touching any component.
- Before handling components, use a grounded wrist strap or touch a safely grounded object or a metal object, such as the power supply case, to avoid damaging them due to static electricity.
- Before you install or remove any component, ensure that the ATX power supply is switched off or the power cord is detached from the power supply. Failure to do so may cause severe damage to the motherboard, peripherals, or components.
- Unplug the power cord before installing or removing the motherboard. Failure to do so can cause you physical injury and damage to motherboard components.

Place this side towards the rear of the chassis

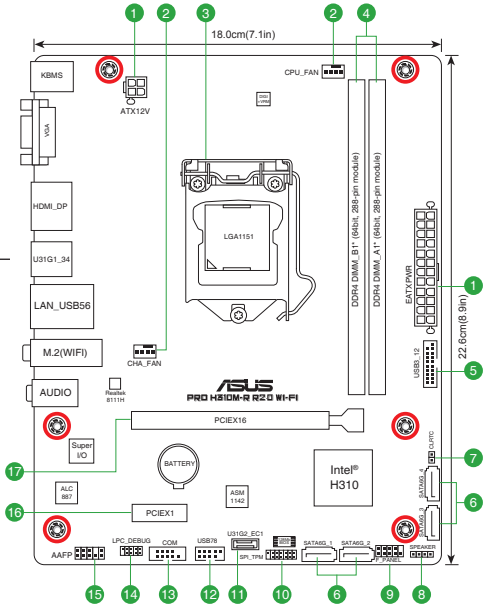

Scan the QR code to get the detailed pin definitions.

1 ATX power connectors (24-pin EATXPWR, 4-pin ATX12V)

Correctly orient the ATX power supply plugs into these connectors and push down firmly until the connectors completely fit.

- For a fully configured system, we recommend that you use a power supply unit (PSU) that complies with ATX 12V Specification 2.0 (or later version) and provides a minimum power of 350 W. Ensure this PSU type has 24-pin and 4-pin power plugs.
- We recommend that you use a PSU with higher power output when configuring a system with more power-consuming devices or when you intend to install additional devices. The system may become unstable or may not boot up if the power is inadequate.
- DO NOT forget to connect the 4-pin ATX +12V power plug. Otherwise,the system will not boot up.

2 CPU and chassis fan connectors (4-pin CPU_FAN, 4-pin CHA_FAN)

Connect the fan cables to the fan connectors on the motherboard, ensuring that the black wire of each cable matches the ground pin of the connector.

Do not forget to connect the fan cables to the fan connectors. Insufficient air flow inside the system may damage the motherboard components. These are not jumpers! Do not place jumper caps on the fan connectors! The CPU_FAN connector supports a CPU fan of maximum 0.5A (6 W) fan power.

3 Intel® LGA1151 CPU socket

Install Intel® LGA1151 CPU into this surface mount LGA1151 socket, which is designed for 8th Generation Intel® Core™ i7 / i5 / i3, Pentium®, and Celeron® processors.

For more details, refer to **Central Processing Unit (CPU)**.

4 DDR4 DIMM slots

Install 2 GB, 4 GB, 8 GB, and 16 GB unbuffered non-ECC DDR4 DIMMs into these DIMM sockets.

For more details, refer to **System memory**.

5 USB 3.1 Gen 1 (up to 5Gb/s) connector (20-1 pin U31G1_12)

Connect a USB 3.1 Gen 1 module to this connector for additional USB 3.1 Gen 1 front or rear panel ports. This connector complies with USB 3.1 Gen 1 specifications and provides faster data transfer speeds of up to 5 Gbps, faster charging time for USB-chargeable devices, optimized power efficiency, and backward compatibility with USB 2.0.

6 Intel® H310 Serial ATA 6.0Gb/s connectors (7-pin SATA6G_1~4)

These connectors connect to Serial ATA 6.0 Gb/s hard disk drives via Serial ATA 6.0 Gb/s signal cables.

7 Clear RTC RAM (2-pin CLRTC)

This header allows you to clear the CMOS RTC RAM data of the system setup information such as date, time, and system passwords.

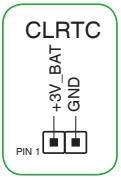

To erase the RTC RAM:

1. Turn OFF the computer and unplug the power cord.
2. Use a metal object such as a screwdriver to short the two pins.
3. Plug the power cord and turn ON the computer.
4. Hold down the <**Del**> key during the boot process and enter BIOS setup to re-enter data.

If the steps above do not help, remove the onboard battery and short the two pins again to clear the CMOS RTC RAM data. After clearing the CMOS, reinstall the battery.

8 Speaker connector (4-pin SPEAKER)

The 4-pin connector is for the chassis-mounted system warning speaker. The speaker allows you to hear system beeps and warnings.

9 System panel connector (10-1 pin F_PANEL)

This connector supports several chassis-mounted functions.

10 TPM connector (14-1 pin TPM)

This connector supports a Trusted Platform Module (TPM) system with a serial peripheral Interface (SPI), allowing you to securely store keys, digital certificates, passwords and data. A TPM system also enhances network security, protects digital identities, and ensures platform integrity.

11 USB 3.1 Gen 2 front panel connector (U31G2_EC1)

This connector allows you to connect a USB 3.1 Gen 2 module for additional USB 3.1 Gen 2 ports. The latest USB 3.1 Gen 2 connectivity provides data transfer speeds of up to 10 Gbps.

12 USB 2.0 connectors (10-1 pin USB78, USB910_F)

Connect a USB module cable to this connectors, then install the module to a slot opening at the back of the system chassis. This USB connector complies with USB 2.0 specifications and supports up to 480Mbps connection speeds.

13 Serial port connector (10-1 pin COM)

Connect the serial port module cable to this connector, then install the module to a slot opening at the back of the system chassis.

14 LPC Debug header

This header allows connection to a LPC debug card.

- Scan the QR code to view the meaning of each debug code.
- Debug codes are only available for ASUS LPC debug card.
- Contact your region sales representative for LPC debug header ordering.

15 Front panel audio connector (10-1 pin AAFP)

This connector is for a chassis-mounted front panel audio I/O module that supports HD audio standard. Connect one end of the front panel audio I/O module cable to this connector.

- We recommend that you connect a high-definition front panel audio module to this connector to avail of the motherboard's high-definition audio capability.
- If you want to connect a high-definition front panel audio module to this connector, set the Front Panel Type item in the BIOS setup to [HD Audio].

16 PCI Express 2.0 x1 slot

This motherboard has one PCI Express 2.0 x1 slot that supports PCI Express x1 network cards, SCSI cards, and other cards that comply with the PCI Express specification.

17 PCI Express 3.0/2.0 x16 slot

This motherboard supports a PCI Express 3.0/2.0 x16 graphic card that complies with the PCI Express specifications.

Rear panel connectors

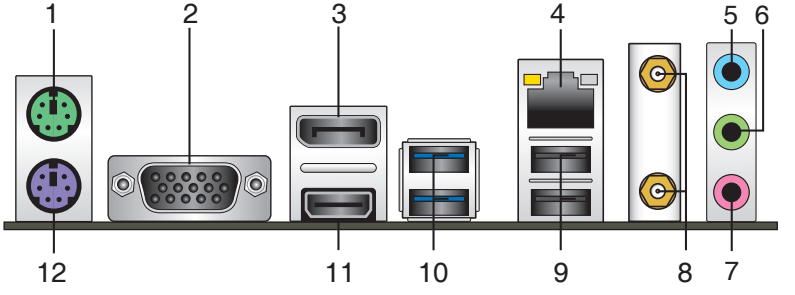

1. **PS/2 Mouse port (green).** This port connects to a PS/2 mouse.
2. **Video Graphics Adapter (VGA) port.** This 15-pin port is for a VGA monitor or other VGA-compatible devices.

3. **DisplayPort.** This port is for a DisplayPort-compatible devices.

4. **LAN (RJ-45) port.** This port allows Gigabit connection to a Local Area Network (LAN) through a network hub.

LAN port LED indications

Activity/Link LED		Speed LED	
Status	Description	Status	Description
Off	No link	OFF	10Mbps connection
Orange	Linked	ORANGE	100Mbps connection
Orange (Blinking)	Data activity	GREEN	1Gbps connection
Orange (Blinking then steady)	Ready to wake up from S5 mode		

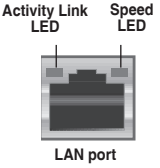

5. **Line In port (light blue).** This port connects to the tape, CD, DVD player, or other audio sources.

6. **Line Out port (lime).** This port connects to a headphone or a speaker. In the 4.1, 5.1and 7.1-channel configurations, the function of this port becomes Front Speaker Out.

7. **Microphone port (pink).** This port connects to a microphone.

Refer to the audio configuration table for the function of the audio ports in 2.1, 4.1, 5.1, or 7.1-channel configuration.

Audio 2.1, 4.1, 5.1 or 7.1-channel configuration

Port	Headset 2.1-channel	4.1-channel	5.1-channel	7.1-channel
Light Blue (Rear panel)	Line In	Rear Speaker Out	Rear Speaker Out	Rear Speaker Out
Lime (Rear panel)	Line Out	Front Speaker Out	Front Speaker Out	Front Speaker Out
Pink (Rear panel)	Mic In	Mic In	Bass/Center	Bass/Center
Lime (Front panel)	-	-	-	Side Speaker Out

To configure a 7.1-channel audio output:

Use a chassis with HD audio module in the front panel to support a 7.1-channel audio output.

8. **Wi-Fi ports.** Connect the bundled ASUS 1T1R Wi-Fi Antenna connectors to this ports.

9. **USB 2.0 ports.** These 4-pin Universal Serial Bus (USB) ports are for USB 2.0/1.1 devices.

10. **USB 3.1 Type A port.** This 9-pin Universal Serial Bus (USB) Type A port is for USB 3.1 devices.

11. **HDMI port.** This port is for a High-Definition Multimedia Interface (HDMI) connector, and is HDCP compliant allowing playback of HD DVD, Blu-ray, and other protected content.

12. **PS/2 Keyboard port (purple).** This port connects to a PS/2 keyboard

Central Processing Unit (CPU)

This motherboard comes with a surface mount LGA1151 socket designed for the 8th Generation Intel® Core™ i7 / Core™ i5 / Core™ i3, Pentium®, and Celeron® processors.

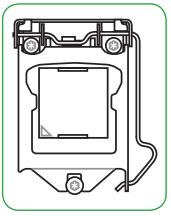

Unplug all power cables before installing the CPU.

- Ensure that you install the correct CPU designed for the LGA1151 socket only. DO NOT install a CPU designed for LGA1150, LGA1155 and LGA1156 sockets on the LGA1151 socket.
- Upon purchase of the motherboard, ensure that the PnP cap is on the socket and the socket contacts are not bent. Contact your retailer immediately if the PnP cap is missing, or if you see any damage to the PnP cap/socket contacts/motherboard components.
- Keep the cap after installing the motherboard. ASUS will process Return Merchandise Authorization (RMA) requests only if the motherboard comes with the cap on the LGA1151 socket.
- The product warranty does not cover damage to the socket contacts resulting from incorrect CPU installation/removal, or misplacement/loss/incorrect removal of the PnP cap.

Installing the CPU

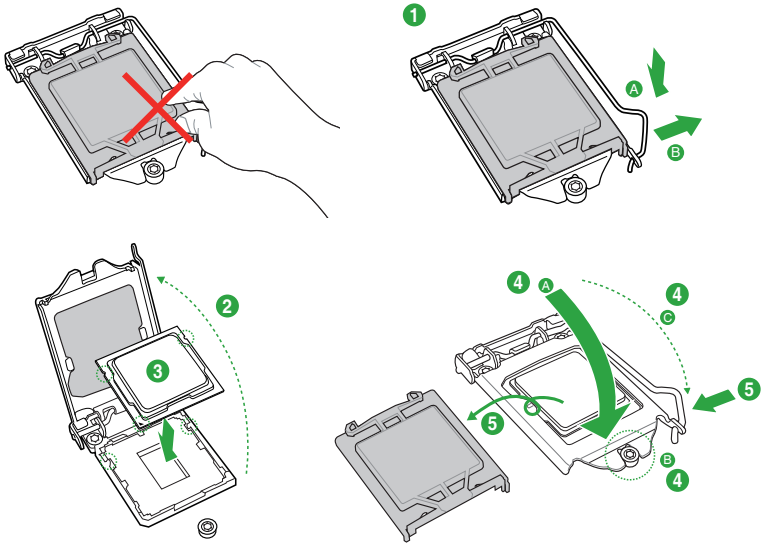

Apply the Thermal Interface Material to the CPU heatsink and CPU before you install the heatsink and fan if necessary.

System memory

Overview

This motherboard comes with two Double Data Rate 4 (DDR4) Dual Inline Memory Module (DIMM) sockets. The figure illustrates the location of the DDR4 DIMM sockets:

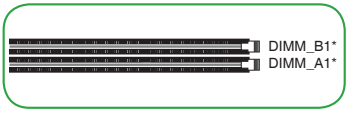

Channel	Sockets
Channel A	DIMM_A1*
Channel B	DIMM_B1*

- You may install varying memory sizes in Channel A and Channel B. The system maps the total size of the lower-sized channel for the dual-channel configuration. Any excess memory from the higher-sized channel is then mapped for single-channel operation.
- Always install DIMMs with the same CAS latency. For optimal compatibility, we recommend that you install memory modules of the same version or date code (D/C) from the same vendor. Check with the retailer to get the correct memory modules.
- DDR4 2666MHz and higher memory modules will run at max. 2666MHz on Intel® 8th Generation 6-core or higher processors.
- Memory modules with memory frequency higher than 2133 MHz and its corresponding timing or the loaded X.M.P. Profile is not the JEDEC memory standard. The stability and compatibility of these memory modules depend on the CPU's capabilities and other installed devices.

- The default memory operation frequency is dependent on its Serial Presence Detect (SPD), which is the standard way of accessing information from a memory module. Under the default state, some memory modules for overclocking may operate at a lower frequency than the vendor-marked value.
- For system stability, use a more efficient memory cooling system to support a full memory load (2 DIMMs).
- Refer to www.asus.com for the latest Memory QVL (Qualified Vendors List).

Recommended memory configuration

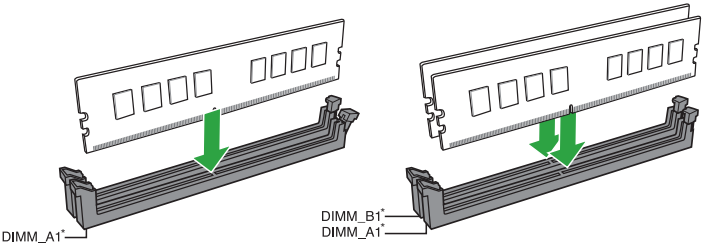

Installing a DIMM

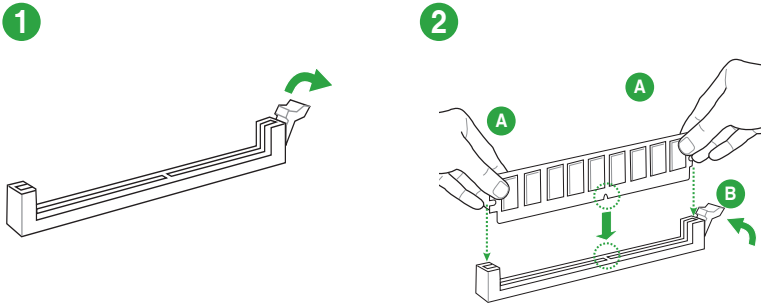

To remove a DIMM

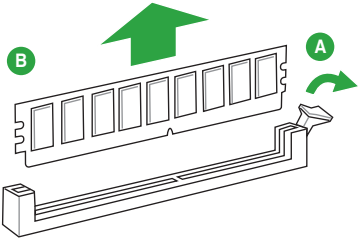

BIOS information

2

Scan the QR code to view the BIOS update guide.

BIOS setup program

Use the BIOS Setup program to update the BIOS or configure its parameters. The BIOS screens include navigation keys and brief online help to guide you in using the BIOS Setup program.

Entering BIOS Setup at startup

To enter BIOS Setup at startup:

Press <Delete> or <F2> during the Power-On Self Test (POST). If you do not press <Delete> or <F2>, POST continues with its routines.

Entering BIOS Setup after POST

To enter BIOS Setup after POST:

- Press <Ctrl>+<Alt>+<Del> simultaneously.
- Press the reset button on the system chassis.
- Press the power button to turn the system off then back on. Do this option only if you failed to enter BIOS Setup using the first two options.

Using the power button, reset button, or the <Ctrl>+<Alt>+<Del> keys to force reset from a running operating system can cause damage to your data or system. We recommend you always shut down the system properly from the operating system.

- The BIOS setup screens shown in this section are for reference purposes only, and may not exactly match what you see on your screen.
- Visit the ASUS website at **www.asus.com** to download the latest BIOS file for this motherboard.
- If the system becomes unstable after changing any BIOS setting, load the default settings to ensure system compatibility and stability. Select the **Load Optimized Defaults** item under the Exit menu or press hotkey F5.
- If the system fails to boot after changing any BIOS setting, try to clear the CMOS and reset the motherboard to the default value. See section **Motherboard overview** for information on how to erase the RTC RAM.

BIOS menu screen

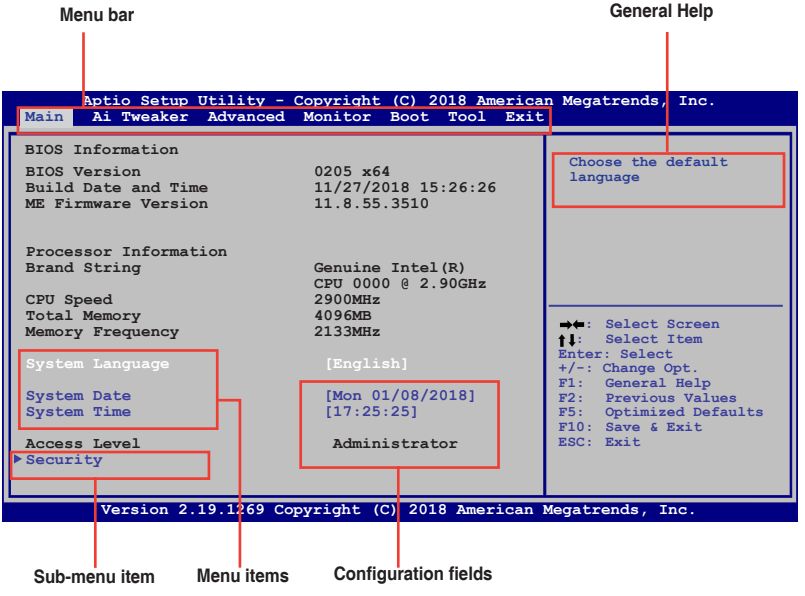

Exit menu

The Exit menu items allow you to load the optimal default values for the BIOS items, and save or discard your changes to the BIOS items.

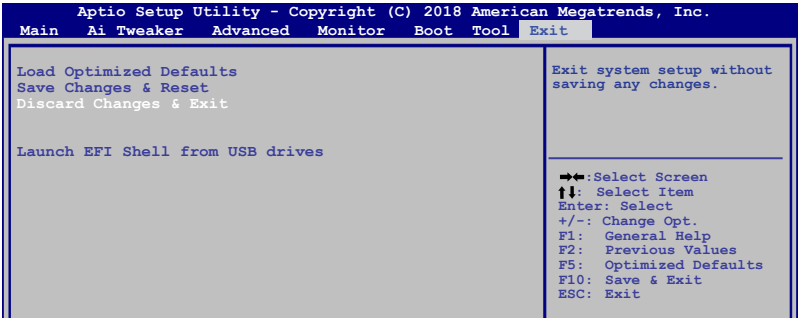

Load Optimized Defaults

This option allows you to load the default values for each of the parameters on the Setup menus. When you select this option or if you press <F5>, a confirmation window appears. Select OK to load the default values.

Save Changes & Reset

Once you are finished making your selections, choose this option from the Exit menu to ensure the values you selected are saved. When you select this option or if you press <F10>, a confirmation window appears. Select OK to save changes and exit.

Discard Changes & Exit

This option allows you to exit the Setup program without saving your changes. When you select this option or if you press <Esc>, a confirmation window appears. Select OK to discard changes and exit.

Launch EFI Shell from USB drives

This option allows you to attempt to launch the EFI Shell application (shellx64.efi) from one of the available USB devices.

Appendix

Notices

FCC Compliance Information

Responsible Party:	Asus Computer International
Address:	48720 Kato Rd., Fremont, CA 94538, USA
Phone / Fax No:	(510)739-3777 / (510)608-4555

Identification of the assembled product: RTL8821CE

Identification of the modular components used in the assembly:

Model Name: 8821CE FCC ID: TX2-RTL8821CE

This device complies with part 15 of the FCC Rules. Operation is subject to the following two conditions: (1) This device may not cause harmful interference, and (2) this device must accept any interference received, including interference that may cause undesired operation.

This equipment has been tested and found to comply with the limits for a Class B digital device, pursuant to part 15 of the FCC Rules. These limits are designed to provide reasonable protection against harmful interference in a residential installation. This equipment generates, uses and can radiate radio frequency energy and, if not installed and used in accordance with the instructions, may cause harmful interference to radio communications. However, there is no guarantee that interference will not occur in a particular installation. If this equipment does cause harmful interference to radio or television reception, which can be determined by turning the equipment off and on, the user is encouraged to try to correct the interference by one or more of the following measures:

- Reorient or relocate the receiving antenna.
- Increase the separation between the equipment and receiver.
- Connect the equipment into an outlet on a circuit different from that to which the receiver is connected.
- Consult the dealer or an experienced radio/TV technician for help.

RF exposure warning

This equipment must be installed and operated in accordance with provided instructions and the antenna(s) used for this transmitter must be installed to provide a separation distance of at least 20 cm from all persons and must not be co-located or operating in conjunction with any other antenna or transmitter. End-users and installers must be provide with antenna installation instructions and transmitter operating conditions for satisfying RF exposure compliance.

Compliance Statement of Innovation, Science and Economic Development Canada (ISED)

This device complies with Innovation, Science and Economic Development Canada licence exempt RSS standard(s). Operation is subject to the following two conditions: (1) this device may not cause interference, and (2) this device must accept any interference, including interference that may cause undesired operation of the device.

Operation in the band 5150–5250 MHz is only for indoor use to reduce the potential for harmful interference to co-channel mobile satellite systems.

CAN ICES-3(B)/NMB-3(B)

Déclaration de conformité de Innovation, Sciences et Développement économique Canada (ISED)

Le présent appareil est conforme aux CNR d'Innovation, Sciences et Développement économique Canada applicables aux appareils radio exempts de licence. L'exploitation est autorisée aux deux conditions suivantes : (1) l'appareil ne doit pas produire de brouillage, et (2) l'utilisateur de l'appareil doit accepter tout brouillage radioélectrique subi, même si le brouillage est susceptible d'en compromettre le fonctionnement.

La bande 5150–5250 MHz est réservée uniquement pour une utilisation à l'intérieur afin de réduire les risques de brouillage préjudiciable aux systèmes de satellites mobiles utilisant les mêmes canaux.

CAN ICES-3(B)/NMB-3(B)

VCCI: Japan Compliance Statement

Class B ITE

この装置は、クラスB情報技術装置です。この装置は、家庭環境で使用することを目的としていますが、この装置がラジオやテレビジョン受信機に近接して使用されると、受信障害を引き起こすことがあります。

取扱説明書に従って正しい取り扱いをして下さい。

ＶＣＣＩ－Ｂ

KC: Korea Warning Statement

B급 기기 (가정용 방송통신기자재)
이 기기는 가정용(B급) 전자파적합기기로서 주로 가정에서 사용하는 것을 목적으로 하며, 모든 지역에서 사용할 수 있습니다.

*당해 무선설비는 전파혼신 가능성이 있으므로 인명안전과 관련된 서비스는 할 수 없습니다.

REACH

Complying with the REACH (Registration, Evaluation, Authorisation, and Restriction of Chemicals) regulatory framework, we published the chemical substances in our products at ASUS REACH website at http://csr.asus.com/english/REACH.htm.



DO NOT throw the motherboard in municipal waste. This product has been designed to enable proper reuse of parts and recycling. This symbol of the crossed out wheeled bin indicates that the product (electrical and electronic equipment) should not be placed in municipal waste. Check local regulations for disposal of electronic products.



DO NOT throw the mercury-containing button cell battery in municipal waste. This symbol of the crossed out wheeled bin indicates that the battery should not be placed in municipal waste.

ASUS Recycling/Takeback Services

ASUS recycling and takeback programs come from our commitment to the highest standards for protecting our environment. We believe in providing solutions for you to be able to responsibly recycle our products, batteries, other components as well as the packaging materials. Please go to http://csr.asus.com/english/Takeback.htm for detailed recycling information in different regions.

Regional notice for California



WARNING

Cancer and Reproductive Harm -
www.P65Warnings.ca.gov

Google™ License Terms

Copyright© 2019 Google Inc. All Rights Reserved.

Licensed under the Apache License, Version 2.0 (the “License”); you may not use this file except in compliance with the License. You may obtain a copy of the License at:

http://www.apache.org/licenses/LICENSE-2.0

Unless required by applicable law or agreed to in writing, software distributed under the License is distributed on an “AS IS” BASIS, WITHOUT WARRANTIES OR CONDITIONS OF ANY KIND, either express or implied.

See the License for the specific language governing permissions and limitations under the License.

NCC: Taiwan Wireless Statement

經型式認證合格之低功率射頻電機，非經許可，公司、商號或使用者均不得擅自變更頻率、加大功率或變更原設計之特性及功能。低功率射頻電機之使用不得影響飛航安全及干擾合法通信；經發現有干擾現象時，應立即停用，並改善至無干擾時方得繼續使用。前項合法通信，指依電信法規定作業之無線電通信。低功率射頻電機須忍受合法通信或工業、科學及醫療用電波輻射性電機設備之干擾。

應避免影響附近雷達系統之操作。

Japan RF Equipment Statement

屋外での使用について

本製品は、5GHz帯域での通信に対応しています。電波法の定めにより5.2GHz、5.3GHz帯域の電波は屋外で使用が禁じられています。

法律および規制遵守

本製品は電波法及びこれに基づく命令の定めるところに従い使用してください。日本国外では、その国の法律または規制により、本製品の使用ができないことがあります。このような国では、本製品を運用した結果、罰せられることがありますが、当社は一切責任を負いかねますのでご了承ください。

Précautions d'emploi de l'appareil :

a. Soyez particulièrement vigilant quant à votre sécurité lors de l'utilisation de cet appareil dans certains lieux (les avions, les aéroports, les hôpitaux, les stations-service et les garages professionnels).

b. Évitez d'utiliser cet appareil à proximité de dispositifs médicaux implantés. Si vous portez un implant électronique (stimulateurs cardiaques, pompes à insuline, neurostimulateurs…), veuillez impérativement respecter une distance minimale de 15 centimètres entre cet appareil et l'implant pour réduire les risques d'interférence.

c. Utilisez cet appareil dans de bonnes conditions de réception pour minimiser le niveau de rayonnement. Ce n'est pas toujours le cas dans certaines zones ou situations, notamment dans les parkings souterrains, dans les ascenseurs, en train ou en voiture ou tout simplement dans un secteur mal couvert par le réseau.

d. Tenez cet appareil à distance du ventre des femmes enceintes et du bas-ventre des adolescents.

Simplified EU Declaration of Conformity

ASUSTek Computer Inc. hereby declares that this device is in compliance with the essential requirements and other relevant provisions of Directive 2014/53/EU. Full text of EU declaration of conformity is available at https://www.asus.com/support/

The WiFi operating in the band 5150-5350MHz shall be restricted to indoor use for countries listed in the table below:

Déclaration simplifiée de conformité de l'UE

ASUSTek Computer Inc. déclare par la présente que cet appareil est conforme aux critères essentiels et autres clauses pertinentes de la directive 2014/53/EU. La déclaration de conformité de l'UE peut être téléchargée à partir du site internet suivant : https://www.asus.com/support/

Dans la plage de fréquence 5150-5350 MHz, le Wi-Fi est restreint à une utilisation en intérieur dans les pays listés dans le tableau ci-dessous:

Vereinfachte EU-Konformitätserklärung

ASUSTek COMPUTER INC erklärt hiermit, dass dieses Gerät mit den grundlegenden Anforderungen und anderen relevanten Bestimmungen der Richtlinie 2014/53/EU übereinstimmt. Der gesamte Text der EU-Konformitätserklärung ist verfügbar unter: https://www.asus.com/support/

Der WLAN-Betrieb im Band von 5150-5350 MHz ist für die in der unteren Tabelle aufgeführten Länder auf den Innenbereich beschränkt:

Dichiarazione di conformità UE semplificata

ASUSTek Computer Inc. con la presente dichiara che questo dispositivo è conforme ai requisiti essenziali e alle altre disposizioni pertinenti con la direttiva 2014/53/EU. Il testo completo della dichiarazione di conformità UE è disponibile all'indirizzo: https://www.asus.com/support/

L'utilizzo della rete Wi-Fi con frequenza compresa nell'intervallo 5150-5350MHz deve essere limitato all'interno degli edifici per i paesi presenti nella seguente tabella:

Упрощенное заявление о соответствии европейской директиве

ASUSTek Computer Inc. заявляет, что устройство соответствует основным требованиям и другим соответствующим условиям директивы 2014/53/EU. Полный текст декларации соответствия ЕС доступен на https://www.asus.com/support/

Работа WiFi в диапазоне частот 5150-5350 должна быть ограничена использованием в помещениях для стран, перечисленных в таблице ниже:

إعلان التوافق المبسط الصادر عن الاتحاد الأوروبي

تقر شركة ASUSTek Computer أن هذا الجهاز يتوافق مع المتطلبات الأساسية والأحكام الأخرى ذات الصلة الخاصة بتوجيه 2014/53/EU. يتوفر النص الكامل لإعلان التوافق الصادر عن الاتحاد الأوروبي على:
https://www.asus.com/support/

يجب حصر استخدام WiFi العاملة بـ 5150-5350 ميجا هرتز على الاستخدام المنزلي للبلدان المدرجة بالجدول.

Опростена декларация за съответствие на ЕС

С настоящото ASUSTek Computer Inc. декларира, че това устройство е в съответствие със съществените изисквания и другите приложими постановления на свързаната Директива 2014/53/ЕС. Пълният текст на ЕС декларация за съвместимост е достъпен на адрес https://www.asus.com/support/

WiFi, работеща в диапазон 5150-5350MHz, трябва да се ограничи до употреба на закрито за страните, посочени в таблицата по-долу:

Declaração de Conformidade UE Simplificada

ASUSTek Computer Inc. declara que este dispositivo está em conformidade com os requisitos essenciais e outras disposições relevantes relacionadas às diretivas 2014/53/UE. O texto completo da declaração de conformidade CE está disponível em https://www.asus.com/support/

O WiFi operando na banda 5150-5350MHz deve ser restrito para uso interno para os países listados na tabela abaixo:

Pojednostavljena EU Izjava o sukladnosti

ASUSTeK Computer Inc. ovim izjavljuje da je ovaj uređaj sukladan s bitnim zahtjevima i ostalim odgovarajućim odredbama direktive 2014/53/EU. Cijeli tekst EU izjave o sukladnosti dostupan je na https://www.asus.com/support/

WiFi koji radi na opsegu frekvencija 5150-5350 MHz bit će ograničen na upotrebu u zatvorenom prostoru u zemljama na donjem popisu:

Zjednodušené prohlášení o shodě EU

Společnost ASUSTek Computer Inc. tímto prohlašuje, že toto zařízení splňuje základní požadavky a další příslušná ustanovení směrnice 2014/53/ EU. Plné znění prohlášení o shodě EU je k dispozici na adrese https://www.asus.com/support/

V zemích uvedených v tabulce je provoz sítě Wi-Fi ve frekvenčním rozsahu 5 150 - 5 350 MHz povolen pouze ve vnitřních prostorech:

Forenklet EU-overensstemmelseserklæring

ASUSTeK Computer Inc. erklærer hermed at denne enhed er i overensstemmelse med hovedkravene og øvrige relevante bestemmelser i direktivet 2014/53/EU. Hele EU-overensstemmelseserklæringen kan findes på https://www.asus.com/support/

Wi-Fi, der bruger 5150-5350 MHz skal begrænses til indendørs brug i lande, der er anført i tabellen:

Vereenvoudigd EU-conformiteitsverklaring

ASUSTeK Computer Inc. verklaart hierbij dat dit apparaat voldoet aan de essentiële vereisten en andere relevante bepalingen van Richtlijn 2014/53/EU. De volledige tekst van de EU-conformiteitsverklaring is beschikbaar op https://www.asus.com/support/

De WiFi op 5150-5350MHz zal beperkt zijn tot binnengebruik voor in de tabel vermelde landen:

Lihtsustatud EÜ vastavusdeklaratsioon

Käesolevaga kinnitab ASUSTek Computer Inc, et seade vastab direktiivi 2014/53/EÜ olulistele nõuetele ja teistele asjakohastele sätetele. EL vastavusdeklaratsiooni täistekst on saadaval veebisaidil https://www.asus.com/support/

Sagedusvahemikus 5150-5350 MHz töötava WiFi kasutamine on järgmistes riikides lubatud ainult siseruumides:

Eurooppa - EY:n vaatimustenmukaisuusvakuutus

ASUSTek Computer Inc. ilmoittaa täten, että tämä laite on direktiivin 2014/53/EU olennaisten vaatimusten ja muiden asiaankuuluvien lisäysten mukainen. Koko EY:n vaatimustenmukaisuusvakuutuksen teksti on luettavissa osoitteessa https://www.asus.com/support/

5 150 - 5 350 MHz:in taajuudella toimiva WiFi on rajoitettu sisäkäyttöön taulukossa luetelluissa maissa:

تبعیت از نسخه ساده شده بیانیه اتحادیه اروپا

ASUSTek Computer Inc در اینجا اعلام می کند که این دستگاه با نیازهای اساسی و سایر مقررات مربوط به بیانیه 2014/53/EU. مطابقت دارد. متن کامل پیروی از این بیانیه اتحادیه اروپا در این آدرس موجود است:
https://www.asus.com/support/.

عملکرد 5150-5350 مگاهرتز برای WiFi باید برای استفاده در فضای داخل ساختمان برای کشورهای فهرست شده در جدول، محدود شود.

Απλοποιημένη Δήλωση Συμμόρφωσης ΕΕ

Διά του παρόντος η ASUSTek Computer Inc. δηλώνει ότι αυτή η συσκευή είναι σύμμορφη με τις βασικές προϋποθέσεις και άλλες σχετικές διατάξεις της Οδηγίας 2014/53/ΕΕ. Το πλήρες κείμενο της δήλωσης συμμόρφωσης της ΕΕ είναι διαθέσιμο στη διεύθυνση https://www.asus.com/support/

Το WiFi που λειτουργεί στη ζώνη 5150-5350MHz περιορίζεται για χρήση σε εσωτερικούς χώρους για τις χώρες που αναφέρονται στον παρακάτω πίνακα:

הצהרת תאימות רגולטורית מקוצרת עבור האיחוד האירופי

ASUSTek Computer Inc. מצהירה בזאת כי מכשיר זה תואם לדרישות החיוניות ולשאר הסעיפים הרלוונטיים של תקנה 2014/53/EU. ניתן לקרוא את הנוסח המלא של הצהרת התאימות הרגולטורית עבור האיחוד האירופי בכתובת:
https://www.asus.com/support/

יש להגביל רשתות Wi-Fi הפועלות ברצועת התדרים 5150-5350MHz לשימוש בתוך מבנים סגורים בארצות המפורטות ברשימה הבאה:

Egyszerűsített EU megfelelőségi nyilatkozat

Az ASUSTek Computer Inc. ezennel kijelenti, hogy ez az eszköz megfelel az 2014/53/EU sz. irányelv alapvető követelményeinek és egyéb vonatkozó rendelkezéseinek. Az EU megfelelőségi nyilatkozat teljes szövegét a következő weboldalon tekintheti meg: https://www.asus.com/support/

Az 5150-5350 MHz-es sávban működő Wi-Fi-t beltéri használatra kell korlátozni az alábbi táblázatban felsorolt országokban:

Pernyataan Kesesuaian UE yang Disederhanakan

ASUSTeK Computer Inc. dengan ini menyatakan bahwa perangkat ini memenuhi persyaratan utama dan ketentuan relevan lainnya yang terdapat pada Petunjuk 2014/53/EU. Teks lengkap pernyataan kesesuaian EU tersedia di: https://www.asus.com/support/

WiFi yang Beroperasi pada 5150-5350 MHz akan terbatas untuk penggunaan dalam ruangan di negara yang tercantum dalam tabel

Vienkāršota ES atbilstības paziņojums

ASUSTeK Computer Inc. ar šo paziņo, ka šī ierīce atbilst Direktīvas 2014/53/ES būtiskajām prasībām un citiem citiem saistošajiem nosacījumiem. Pilns ES atbilstības paziņojuma teksts pieejams šeit: https://www.asus.com/support/

Wi-Fi darbība 5150–5350 MHz ir jāierobežo lietošanai telpās valstīs, kuras norādītas tālāk.

Supaprastinta ES atitikties deklaracija

Šiame dokumente bendrovė „ASUSTek Computer Inc." pareiškia, kad šis prietaisas atitinka pagrindinius reikalavimus ir kitas susijusias Direktyvos 2014/53/ES nuostatas. Visas ES atitikties deklaracijos tekstas pateikiamas čia: https://www.asus.com/support/

Toliau nurodytose šalyse „WiFi" ryšiu, veikiančiu 5 150–5 350 MHz dažnio juostoje, galima naudotis tik patalpose:

Ovaj uređaj može da se koristi u državama navedenim ispod:

Forenklet EU-samsvarserklæring

ASUSTek Computer Inc. erklærer herved at denne enheten er i samsvar med hovedsaklige krav og andre relevante forskrifter i direktivet 2014/53/EU. Fullstendig tekst for EU-samsvarserklæringen finnes på: https://www.asus.com/support/

Wi-Fi-området 5150–5350 MHz skal begrenses til innendørs bruk for landene som er oppført i tabellen:

Uproszczona deklaracja zgodności UE

Firma ASUSTek Computer Inc. niniejszym oświadcza, że urządzenie to jest zgodne z zasadniczymi wymogami i innymi właściwymi postanowieniami dyrektywy 2014/53/EU. Pełny tekst deklaracji zgodności UE jest dostępny pod adresem https://www.asus.com/support/

W krajach wymienionych w tabeli działanie sieci Wi-Fi w paśmie 5150–5350 MHz powinno być ograniczone wyłącznie do pomieszczeń:

Declaração de Conformidade Simplificada da UE

A ASUSTek Computer Inc. declara que este dispositivo está em conformidade com os requisitos essenciais e outras disposições relevantes da Diretiva 2014/53/UE. O texto integral da declaração de conformidade da UE está disponível em https://www.asus.com/support/

A utilização das frequências WiFi de 5150 a 5350MHz está restrita a ambientes interiores nos países apresentados na tabela:

Declarație de conformitate UE, versiune simplificată

Prin prezenta, ASUSTek Computer Inc. declară că acest dispozitiv este în conformitate cu reglementările esențiale și cu celelalte prevederi relevante ale Directivei 2014/53/UE. Textul complet al declarației de conformitate UE este disponibil la adresa https://www.asus.com/support/

Pentru țările listate în tabelul de mai jos, rețelele WiFi care funcționează în banda de frecvență de 5.150-5.350 MHz trebuie utilizate doar în interior:

Pojednostavljena Deklaracija o usaglašenosti EU

ASUSTek Computer Inc. ovim izjavljuje da je ovaj uređaj usaglašen sa osnovnim zahtevima i drugim relevantnim odredbama Direktive 2014/53/EU. Ceo tekst Deklaracije o usaglašenosti EU dostupan je na lokaciji https://www.asus.com/support/

WiFi koji radi u frekventnom opsegu od 5150 MHz do 5350 MHz ograničen je isključivo na upotrebu u zatvorenom prostoru za zemlje navedene u tabeli ispod:

Zjednodušené vyhlásenie o zhode platné pre EÚ

Spoločnosť ASUSTek Computer Inc. týmto vyhlasuje, že toto zariadenie je v súlade so základnými požiadavkami a ďalšími príslušnými ustanoveniami smernice č. 2014/53/EÚ. Plné znenie vyhlásenia o zhode pre EÚ je k dispozícii na lokalite https://www.asus.com/support/

Činnosť WiFi v pásme 5150 - 5350 MHz bude obmedzená na použitie vo vnútornom prostredí pre krajiny uvedené v tabuľke nižšie:

Poenostavljena izjava EU o skladnosti

ASUSTek Computer Inc. tukaj izjavlja, da je ta naprava skladna s temeljnimi zahtevami in drugimi relevantnimii določili Direktive 2014/53/EU. Polno besedilo izjave EU o skladnosti je na voljo na https://www.asus.com/support/

WiFi, ki deluje v pasovnem območju 5150–5350 MHz, mora biti v državah, navedenih v spodnjem seznamu, omejen na notranjo uporabo:

Declaración de conformidad simplificada para la UE

Por la presente, ASUSTek Computer Inc. declara que este dispositivo cumple los requisitos básicos y otras disposiciones pertinentes de la directiva 2014/53/EU. En https://www.asus.com/support/ está disponible el texto completo de la declaración de conformidad para la UE.

La conexión WiFi con una frecuencia de funcionamiento de 5150-5350 MHz se restringirá al uso en interiores para los países enumerados en la tabla:

Förenklad EU-försäkran om överensstämmelse

ASUSTek Computer Inc. deklarerar härmed att denna enhet överensstämmer med de grundläggande kraven och andra relevanta bestämmelser i direktiv 2014/53/EU. Fullständig text av EU-försäkran om överensstämmelse finns på https://www.asus.com/support/

WiFi som använder 5150-5350 MHz kommer att begränsas för användning inomhus i de länder som anges i tabellen:

ประกาศเกี่ยวกับความสอดคล้องของสหภาพยุโรปแบบย่อ

ASUSTek Computer Inc.
ขอประกาศในที่นี้ว่าอุปกรณ์นี้มีความสอดคล้องกับความต้องการที่จำเป็นและเงื่อนไขที่เกี่ยวข้องอื่น ๆ ของบทบัญญัติข้อกำหนด 2014/53/EU เนื้อหาที่สมบูรณ์ของประกาศความสอดคล้องกับ EU มีอยู่ที่ https://www.asus.com/support/

การทำงานของ WiFi ที่ 5150-5350MHz ถูกจำกัดให้ใช้ในอาคารสำหรับประเทศที่แสดงในตาราง

Basitleştirilmiş AB Uyumluluk Bildirimi

ASUSTek Computer Inc., bu aygıtın 2014/53/EU Yönergesinin temel gereksinimlerine ve diğer ilgili hükümlerine uygun olduğunu bildirir. AB uygunluk bildiriminin tam metni şu adreste bulunabilir: https://www.asus.com/support/

5150-5350 MHz arasındaki WiFi çalışması, tabloda listelenen ülkeler için iç mekân kullanımıyla kısıtlanacaktır.

Спрощена декларація про відповідність нормам ЄС

ASUSTek Computer Inc. заявляє, що цей пристрій відповідає основним вимогам та іншим відповідним вимогам Директиви 2014 / 53 / ЄU. Повний текст декларації відповідності нормам ЄС доступний на https://www.asus.com/support/

Робота Wi-Fi на частоті 5150-5350 МГц обмежується використанням у приміщенні для країн, поданих у таблиці нижче:

CE

AT	BE	BG	CZ	DK	EE	FR
DE	IS	IE	IT	EL	ES	CY
LV	LI	LT	LU	HU	MT	NL
NO	PL	PT	RO	SI	SK	TR
FI	SE	CH	UK	HR		

RTL8821CE output power table:

Function	Frequency	Maximum Output Power (EIRP)
WiFi	2400-2483.5 MHz	18.22 dBm
	5150-5350 MHz	20.16 dBm
	5470-5725 MHz	19.88 dBm
Bluetooth	2402-2483.5 MHz	7.12 dBm

For the standard EN 300 440 V2.1.1, if this device operates in 5725-5875 MHz, it will be considered as a receiver category 2.

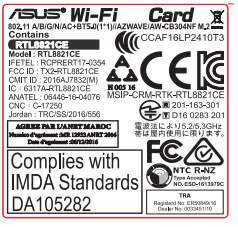

ASUS contact information

ASUSTeK COMPUTER INC.

Address	4F, No. 150, Li-Te Road, Peitou, Taipei 112, Taiwan
Telephone	+886-2-2894-3447
Fax	+886-2-2890-7798
Web site	www.asus.com

Technical Support

Telephone	+86-21-38429911
Fax	+86-21-5866-8722, ext. 9101#
Online support	http://qr.asus.com/techserv

ASUS COMPUTER INTERNATIONAL (America)

Address	48720 Kato Rd., Fremont, CA 94538, USA
Telephone	+1-510-739-3777
Fax	+1-510-608-4555
Web site	http://www.asus.com/us/

Technical Support

Support fax	+1-812-284-0883
Telephone	+1-812-282-2787
Online support	http://qr.asus.com/techserv

ASUS COMPUTER GmbH (Germany and Austria)

Address	Harkort Str. 21-23, 40880 Ratingen, Germany
Fax	+49-2102-959931
Web site	http://www.asus.com/de
Online contact	http://eu-rma.asus.com/sales

Technical Support

Telephone	+49-2102-5789555
Support Fax	+49-2102-959911
Online support	http://qr.asus.com/techserv