PLW 1002 - 2x2 LED video wall mount

EN	Mounting instructions	IT	Istruzioni di montaggio	RU	Инструкция по сборке и установке	RO	Instrucțiuni de montaj
DE	Montageanleitung	PT	Manual de montagem	CZE	Návod k montáži	UK	Вказівки по монтажі
FR	Consignes d'installation	EL	Οδηγίες συναρμογής	SK	Návod na montáž	BG	Инструкции за монтаж
NL	Montagevoorschrift	SV	Montageföreskrifter	HU	Szerelési előírás	JA	設置の説明書
ES	Instrucciones de montage	PL	Instrukcja montażu	TR	Montaj kılavuzu	ZH	装配说明

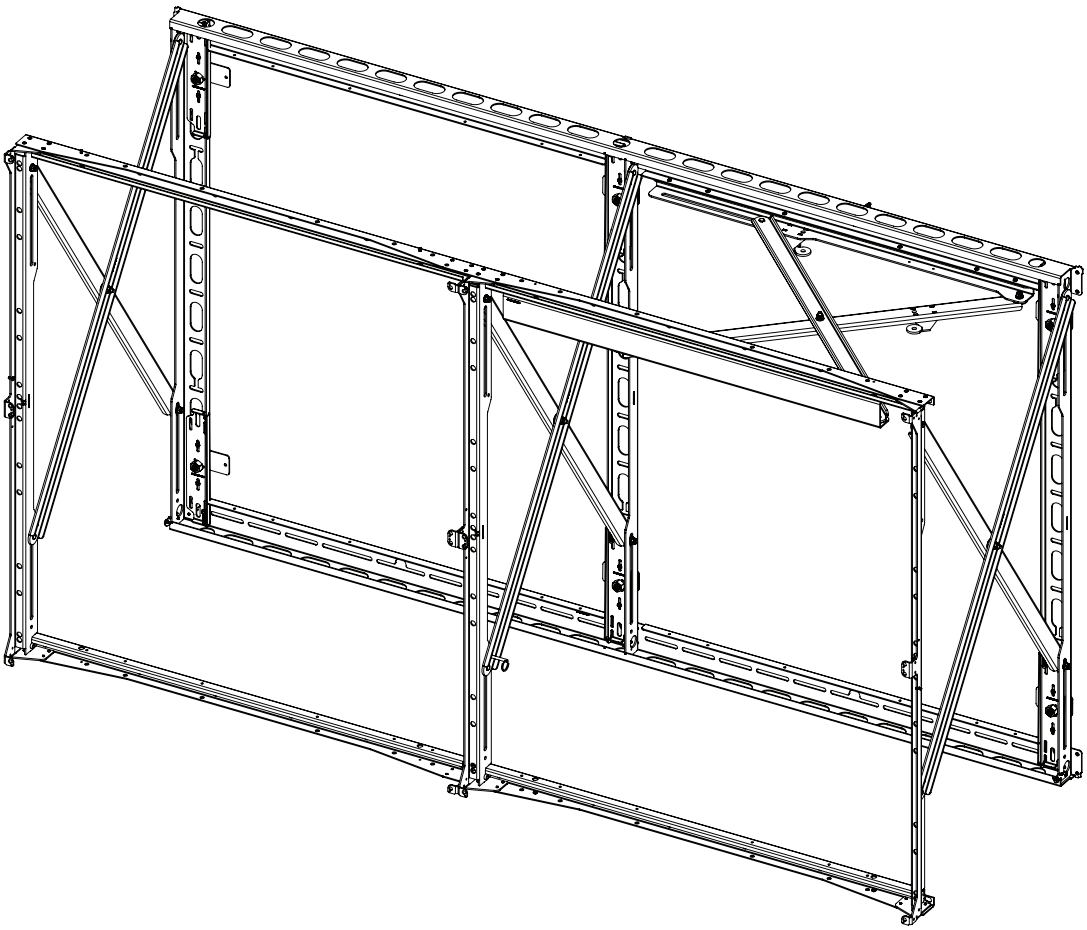

MOUIN_PLW1002_V02

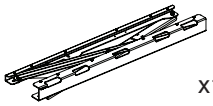

x1

Cross Stabilizer

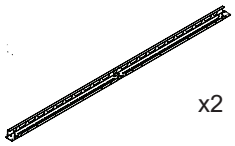

x2

Scissor Support
Wall Bracket

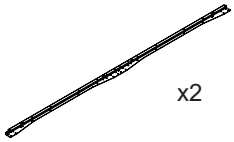

x2

Horizontal Support

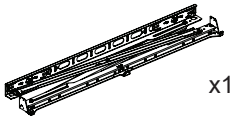

x1

Left Scissor Support

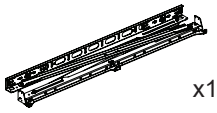

x1

Right Scissor Support

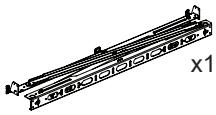

x1

Center Scissor
Support

A

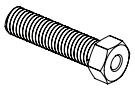

x6

5/8”-10 x 2” Bolt
with hole

B

x6

5/16” x 6” Lag Bolt

C

x8

5/16” Washer

D

x16

M6 x 20mm
Socket Cap

E

x16

M4 x 6mm
Set Screw

F

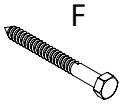

x2

5/16” x 3” Lag
Bolt

G

x1

M2 Allen Key

H

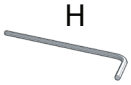

x1

M5 Allen Key

I

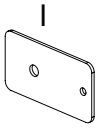

x6

Wall Bracket

J

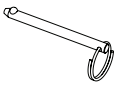

x1

1/4” x 2 1/2”
Push Pin

K

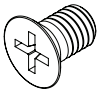

x49

M5 x 8mm Flat Head
Screw

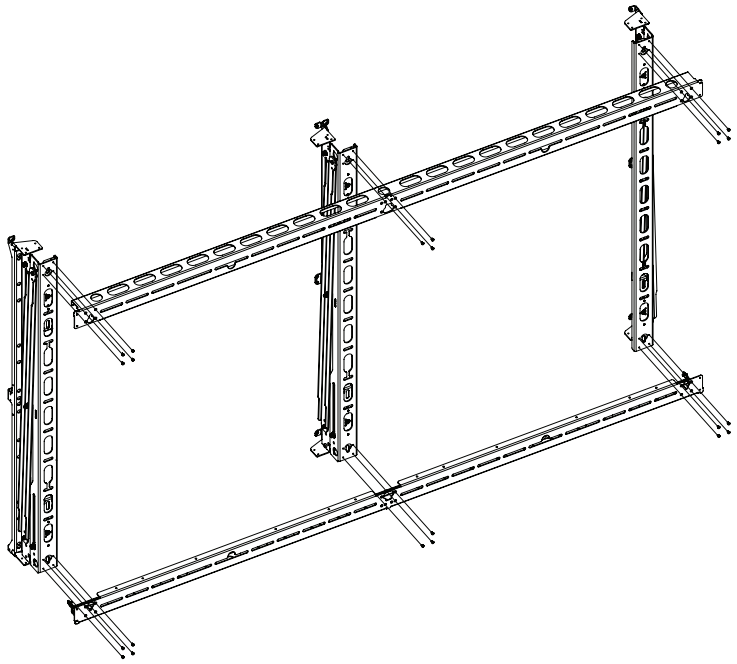

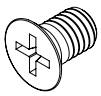

x25

M5 x 8 mm Flat Head Screw (K)

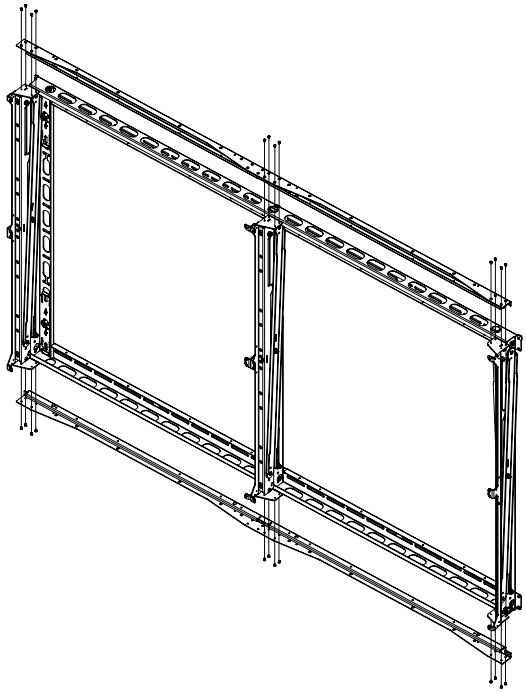

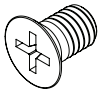

x24

M5 x 8 mm Flat Head Screw (K)

1

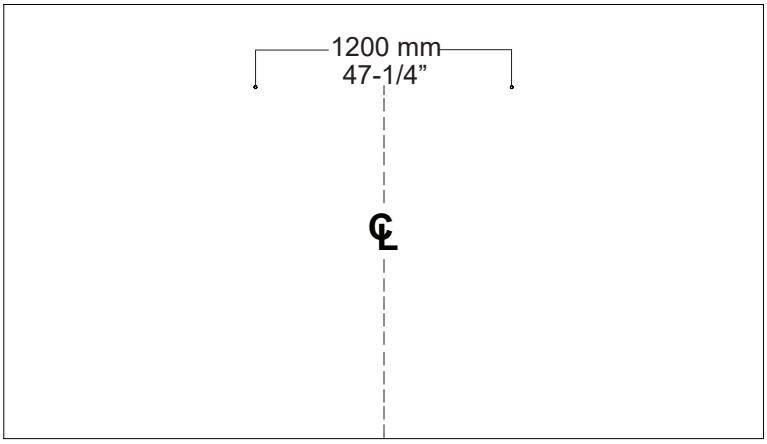

1) Find your desired mounting location.
2) Drill two 5/16” x 3” lag bolts (F) with washers (C) into the wall 47-1/4 inches (1200 mm) apart from each other.

2

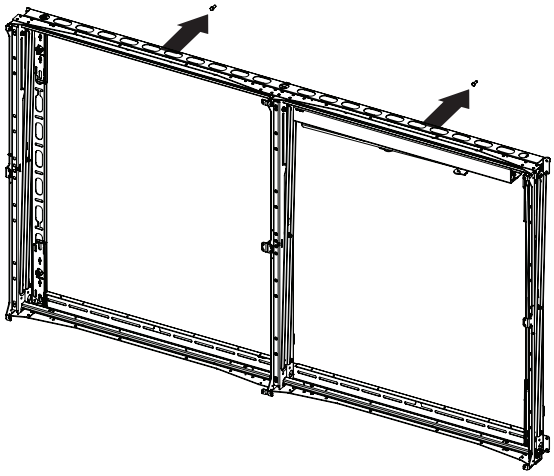

Key Slot

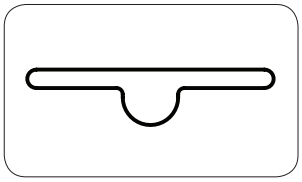

Place the wall mount over the lag bolt through the key slot hole.

3

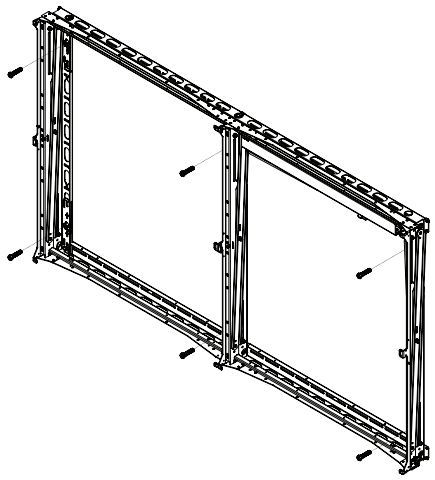

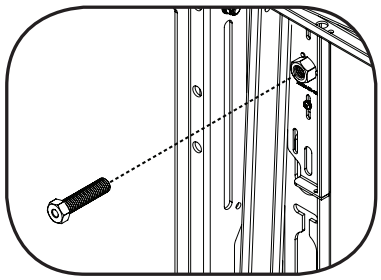

Install the six (6) 5/8”-10 x 2” Bolt (A) with hole into the wall mount.

4

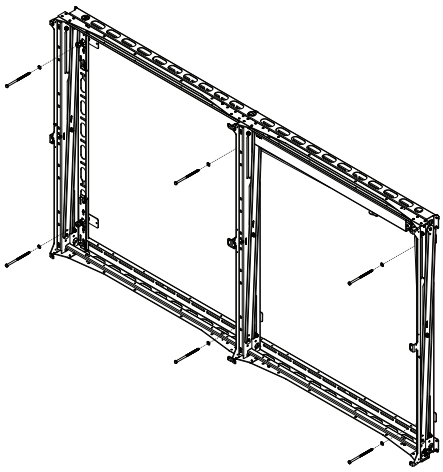

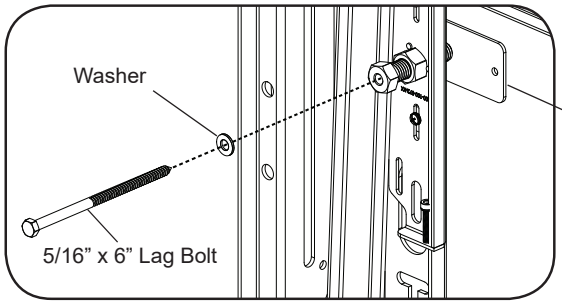

1) Level the wall mount.
2) Place the wall bracket (I) between the wall mount and wall.
3) Secure the mount into the wall using six (6) 5/16” x 6” lag bolts (B) and six (6) 5/16” washers (C) into the 5/8”-10 x 2” Bolt with hole.

5

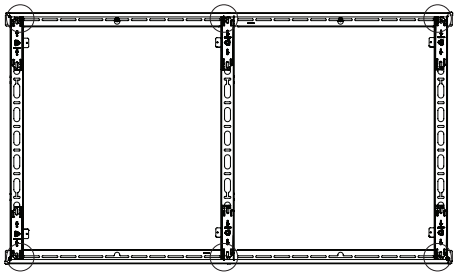

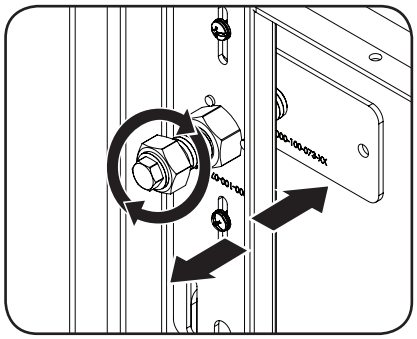

Uneven wall surfaces can be adjust by turning the 5/8”-10 x 2 Bolt with hole.

6

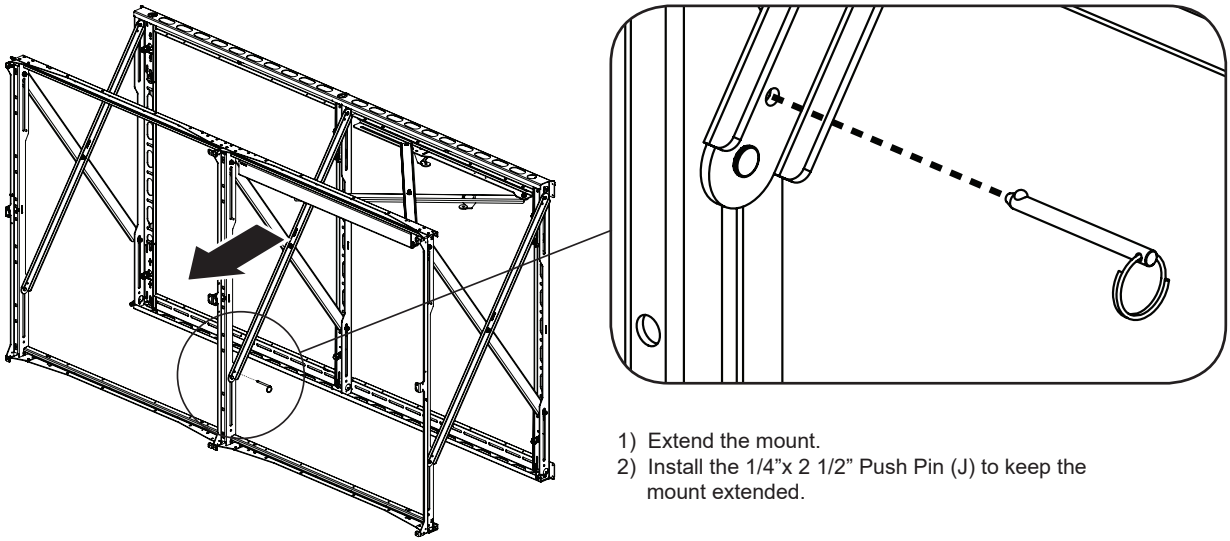

1) Extend the mount.
2) Install the 1/4”x 2 1/2” Push Pin (J) to keep the mount extended.

7

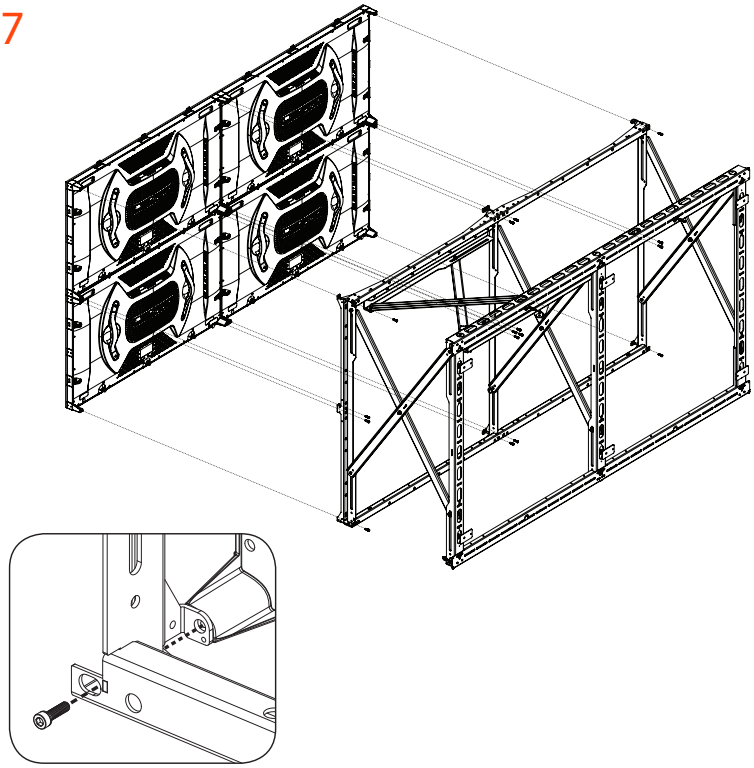

3	4
1	2

1) Install the LED panels using sixteen (16) M6 x 20 mm socket cap screws (D).
2) Install the LED panels in the following order shown above.
3) See next page for adjustments.

8

Adjustments

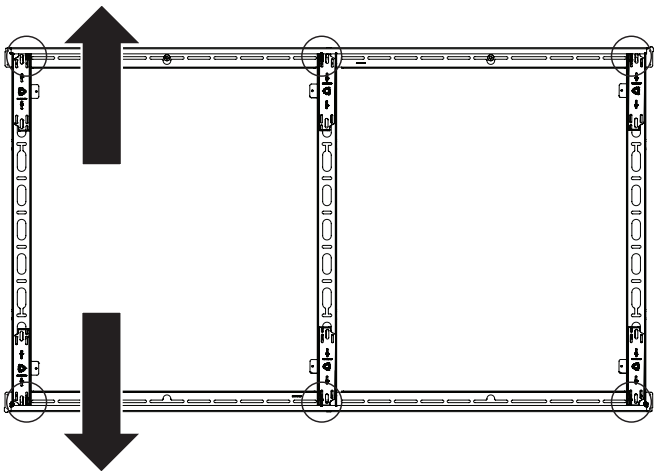

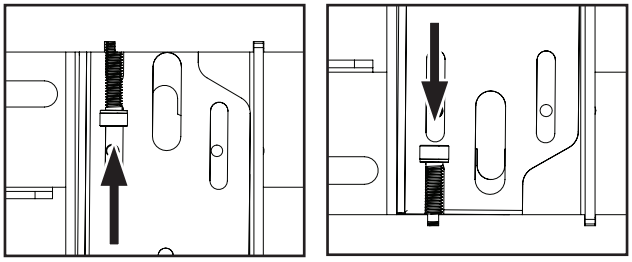

Use to the M5 Allen Key (H) on the M6 socket cap screw to adjust.

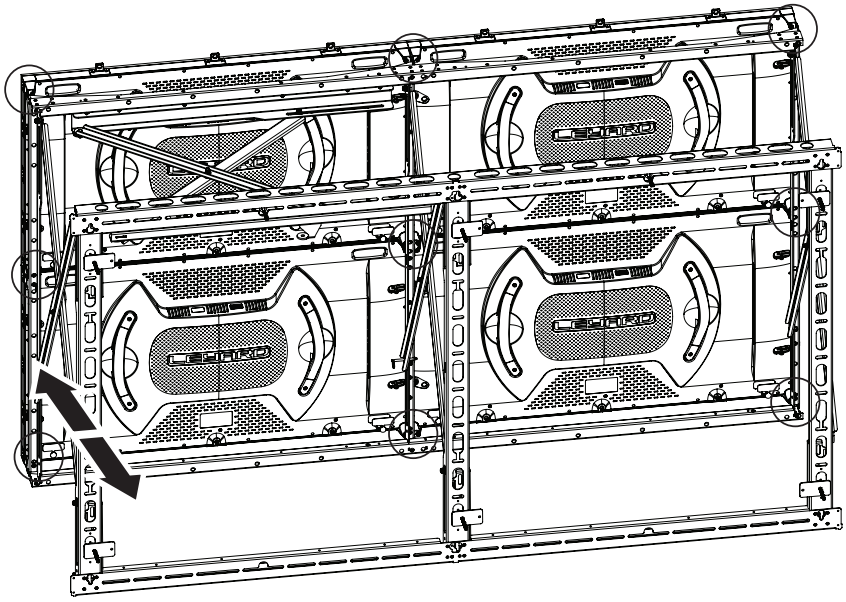

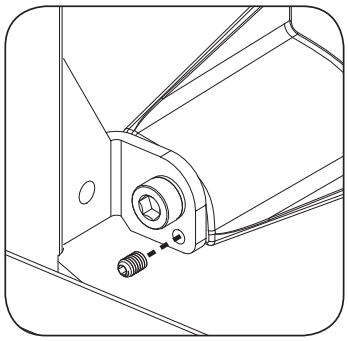

Install sixteen (16) M4 x 6 mm set screws (E). You can adjust the panel in & out by using the M2 Allen Key (G).

(GB) Subject to printing errors and technical amendments.
(NL) Drukfouten en technische wijzigingen voorbehouden.
(F) Sous réserve de fautes d'impression et de modi cations techniques.
(D) Für Druckfehler übernehmen wir keine Verantwortung. Technische Änderungen vorbehalten.
(E) Reservados errores de imprenta y sujete a modi cationes.
(I) Con riserva di modi che techniche e di eventueli errori di stampa.
(P) Reserva-se a ocorrência de gralhas e de modificações técnicas.
(H) Nyomdahibák és technikai változtatások joga fenntartva.
(PL) Zastrzega się możliwość występowania błędów drukarskich i zmian technicznych.
(RUS) Vozmoøny oпibki pri pehati i texniheskie modifikacii.

Designed and engineered in the Netherlands
More information on: www.vogels.com

VOGEL'S PRODUCTS BV, HONDSRUGLAAN 93, 5628 DB EINDHOVEN, THE NETHERLANDS