T8DEC946R

EN **User Manual**
Tumble Dryer

USER MANUAL

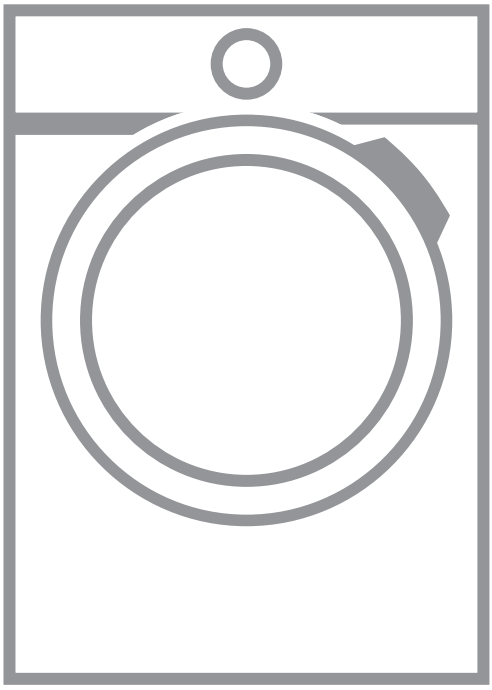

AEG

CONTENTS

1. SAFETY INFORMATION....3
2. SAFETY INSTRUCTIONS....5
3. PRODUCT DESCRIPTION....7
4. CONTROL PANEL....8
5. PROGRAMME....9
6. OPTIONS....12
7. BEFORE FIRST USE....13
8. DAILY USE....13
9. HINTS AND TIPS....16
10. CARE AND CLEANING....17
11. TROUBLESHOOTING....19
12. TECHNICAL DATA....21
13. ACCESSORIES....23
14. QUICK GUIDE....24
15. PRODUCT INFORMATION SHEET IN REFERENCE TO E.U. REGULATION 1369/2017....25

FOR PERFECT RESULTS

Thank you for choosing this AEG product. We have created it to give you impeccable performance for many years, with innovative technologies that help make life simpler features you might not find on ordinary appliances. Please spend a few minutes reading to get the very best from it.
Visit our website for:

Get usage advice, brochures, trouble shooter, service information:
www.aeg.com/webselfservice

Register your product for better service:
www.registeraeg.com

Buy Accessories, Consumables and Original spare parts for your appliance:
www.aeg.com/shop

CUSTOMER CARE AND SERVICE

Always use original spare parts.
When contacting our Authorised Service Centre, ensure that you have the following data available: Model, PNC, Serial Number.
The information can be found on the rating plate.

⚠ Warning / Caution-Safety information

ⓘ General information and tips

Environmental information

Subject to change without notice.

1. ⚠ SAFETY INFORMATION

Before beginning the installation and use of this appliance, carefully read the supplied instructions. The manufacturer is not responsible for any injuries or damages that are the result of incorrect installation or usage. Always keep the instructions in a safe and accessible location for future reference.

- Read the supplied instructions.

1.1 Children and vulnerable people safety

**WARNING!**
Risk of suffocation, injury or permanent disability.

- This appliance can be used by children aged from 8 years and above and persons with reduced physical, sensory or mental capabilities or lack of experience and knowledge if they have been given supervision or instruction concerning the use of the appliance in a safe way and understand the hazards involved.
- Children between 3 and 8 years of age and persons with very extensive and complex disabilities shall be kept away from the appliance unless continuously supervised.
- Children of less than 3 years of age should be kept away from the appliance unless continuously supervised.
- Do not let children play with the appliance.
- Keep all packaging away from children and dispose of it appropriately.
- Keep detergents away from children.
- Keep children and pets away from the appliance when the door is open.
- If the appliance has a child safety device, it should be activated.
- Children shall not carry out cleaning and user maintenance of the appliance without supervision.

1.2 General Safety

- Do not change the specification of this appliance.
- If the tumble dryer is put on top of a washing machine, use the stacking kit. The stacking kit, available from your authorized vendor, can be used only with the appliance specified in the instructions supplied with the accessory. Read it carefully before installation (refer to the Installation leaflet).
- The appliance can be installed as freestanding or below a kitchen counter with correct space (refer to the Installation leaflet).
- Do not install the appliance behind a lockable door, a sliding door or a door with a hinge on the opposite side, that would prevent the appliance door from being fully open.
- The ventilation opening in the base must not be covered by a carpet, mat, or any floor covering.
- CAUTION: The appliance must not be supplied through an external switching device, such as a timer, or connected to a circuit that is regularly switched on and off by a utility.
- Connect the mains plug to the mains socket only at the end of the installation process. Make sure that the mains plug is accessible after installation.
- If the mains power supply cable is damaged, it must be replaced by the manufacturer, its Authorised Service Centre or similarly qualified persons to avoid an electrical hazard.
- Do not exceed the maximum load of 9 kg (refer to the "Programme chart" chapter).
- Do not use the appliance if items have been soiled with industrial chemicals.
- Wipe away lint or packaging debris that has accumulated around the appliance.
- Do not run the appliance without a filter. Clean the lint filter before or after each use.
- Do not dry unwashed items in the tumble dryer.

- Items that have been soiled with substances such as cooking oil, acetone, alcohol, petrol, kerosene, spot removers, turpentine, waxes and wax removers should be washed in hot water with an extra amount of detergent before being dried in the tumble dryer.
- Items such as foam rubber (latex foam), shower caps, waterproof textiles, rubber backed articles and clothes or pillows fitted with foam rubber pads should not be dried in the tumble dryer.
- Fabric softeners, or similar products, should only be used as specified by the product manufacturer's instructions.
- Remove all objects from items that could be a source of fire ignition such as lighters or matches.
- WARNING: Never stop a tumble dryer before the end of the drying cycle unless all items are quickly removed and spread out so that the heat is dissipated.
- Before any maintenance operation, deactivate the appliance and disconnect the mains plug from the socket.

2. SAFETY INSTRUCTIONS

2.1 Installation

- Remove all the packaging.
- Do not install or use a damaged appliance.
- Follow the installation instructions supplied with the appliance.
- Always take care when moving the appliance as it is heavy. Always use safety gloves and enclosed footwear.
- Do not install or use the appliance where the temperature can be lower than 5°C or higher than 35°C.
- The floor area on which the appliance is to be installed must be flat, stable, heat resistant and clean.
- Make sure that there is air circulation between the appliance and the floor.
- Always keep the appliance vertical when it is being moved.
- The rear surface of the appliance must be put against a wall.
- When the appliance is in its permanent position, check if it is levelled correctly with the aid of a spirit level. If it is not, adjust the feet accordingly.

2.2 Electrical connection

WARNING!
Risk of fire and electric shock.

- Connect the mains plug to the mains socket only at the end of the installation. Make sure that there is access to the mains plug after the installation.
- The appliance must be earthed.
- Make sure that the parameters on the rating plate are compatible with the electrical ratings of the mains power supply.

- Always use a correctly installed shockproof socket.
- Do not use multi-plug adapters and extension cables.
- Do not pull the mains cable to disconnect the appliance. Always pull the mains plug.
- Do not touch the mains cable or the mains plug with wet hands.
- This appliance complies with the E.E.C. Directives.

2.3 Use

WARNING!
Risk of injury, electric shock, fire, burns or damage to the appliance.

- This appliance is for household use only.
- Do not dry damaged (torn, frayed) items that contain padding or fillings.
- If laundry has been washed with a stain remover, carry out an additional rinse cycle before starting a drying cycle.
- Dry only fabrics that are suitable to dry in the appliance. Follow the cleaning instruction on the item label.
- Do not drink or prepare food with the condensed water/distilled water. It can cause health problems to people and pets.
- Do not sit or stand on the open door of the appliance.
- Do not dry dripping wet clothes in the appliance.

2.4 Internal lighting

WARNING!
Risk of injury.

- Visible LED radiation, do not look directly into the beam.
- The LED lamp is dedicated to drum lighting. This lamp cannot be reused for other lighting purposes.
- To replace the internal lighting, contact the Authorised Service Centre.

2.5 Care and cleaning

WARNING!
Risk of injury or damage to the appliance.

- Do not use water spray and steam to clean the appliance.
- Clean the appliance with a moist soft cloth. Only use neutral detergents. Do not use any abrasive products, abrasive cleaning pads, solvents or metal objects.
- To prevent damage to the cooling system be careful when you clean the appliance.

2.6 Compressor

WARNING!
Risk of damage to the appliance.

- The compressor and its system in the tumble dryer is filled with a special agent which is free from fluoro-chloro-hydrocarbons. This system must stay tight. The damage of the system can cause a leakage.

2.7 Disposal

WARNING!
Risk of injury or suffocation.

- Disconnect the appliance from the mains electrical and water supplies.
- Cut off the mains electrical cable close to the appliance and dispose of it.
- Remove the door catch to prevent children or pets from becoming trapped in the drum.
- Dispose of the appliance in accordance with local requirements for the disposal of Waste Electrical and Electronic Equipment (WEEE).

3. PRODUCT DESCRIPTION

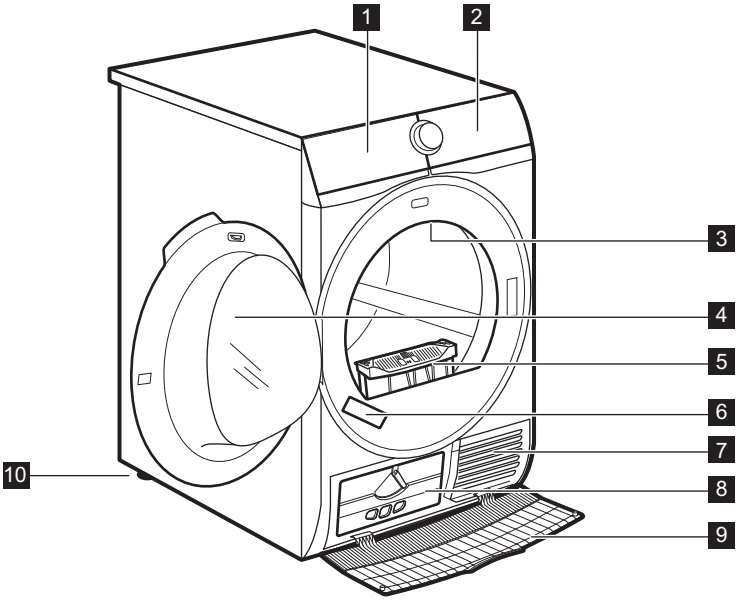

1 Water container
2 Control panel
3 Internal lighting
4 Appliance door
5 Filter
6 Rating plate
7 Airflow slots
8 Condenser lid
9 Condenser cover
10 Adjustable feet

For ease of loading laundry or ease of installation the door is reversible. (see separate leaflet).

4. CONTROL PANEL

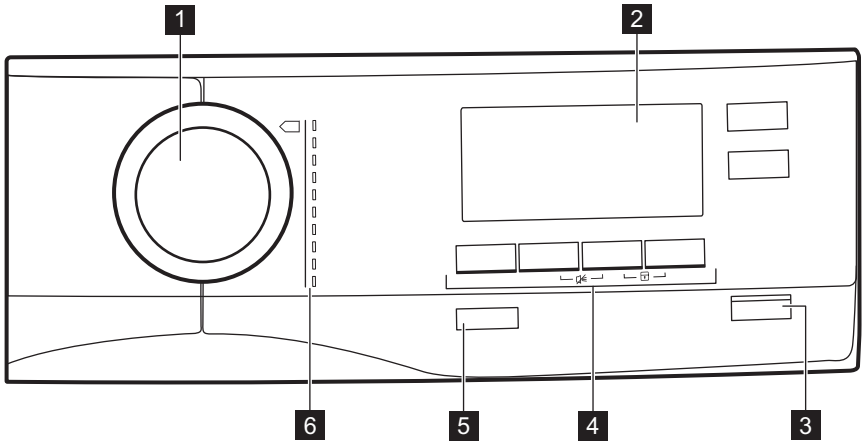

1 Programme dial
2 Display
3 Start/Pause button
4 Options
5 On/Off button with *Auto Off* function
6 Programmes

4.1 Display

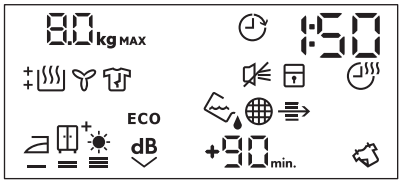

Symbol on the display	Symbol description
8.0 kg MAX	laundry maximum load
	delay start option on
30'-20h	delay start selection (30min-20h)
1:50	cycle time indication
	buzzer off

Symbol on the display	Symbol description
	child lock on
	time drying option on
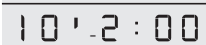	time drying selection (10min-2h)
	indicator: *drain the water container*
	indicator: *clean the filter*
	indicator: *check the condenser*
	laundry dryness option: iron dry, cupboard dry, cupboard dry +, extra dry
ECO	**ECO** option on
	Quiet Mode option on
	Refresh option on
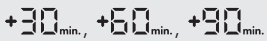	extension of the default anti-crease phase: +30min, +60min, +90min)
	indicator: *drying phase*
	indicator: *cooling phase*
	indicator: *crease guard phase*

5. PROGRAMME

Programme	Load [1]	Properties / Fabric mark
 [2] Cottons Eco	**9 kg**	Cycle to be used to dry cotton with "cotton cupboard" dryness level, with maximum energy saving. / 
Cottons	**9 kg**	Cycle defined to dry all types of cotton ready to store (cupboard dry). / 
Synthetics	**3,5 kg**	Synthetic and mixed fabrics. / 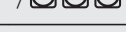
Mixed	**3 kg**	Cotton and synthetic fabrics. /

Programme	Load [1]	Properties / Fabric mark
Wool	**1 kg**	Woollen fabrics. Gentle drying for hand-washable woollens. Remove items immediately when the programme is completed.  The wool drying cycle of this machine has been approved by The Woolmark Company for the drying of wool garments labelled as "hand wash" provided that the garments are dried according to the instructions issued by the manufacturer of this machine. Follow the garment care label for other laundry instructions. M1717 The Woolmark symbol is a Certification mark in many countries.
Silk	**1 kg**	Gentle drying of hand-washable silks. /
Bedlinen	**3 kg**	Bed linen such as single and double sheets, pillowcases, duvet cover. /
Easy Iron	**1,5 kg (or 5 shirts)**	Easy care fabrics for which a minimum of ironing is necessary. The drying results can be different from one type of fabric to another. Shake the items before putting them in the appliance. When the programme has ended, immediately remove the items and put them on a hanger. /
Outdoor	**2 kg**	Outdoor clothing, technical, sports fabrics, waterproof and breathable jackets, shell jackets with a removable fleece or inner insulation. Suitable for drying in tumble dryer. /

Programme	Load [1]	Properties / Fabric mark
Duvet	**3 kg**	Single or double duvets and pillows (with feather, down or synthetic fillings). /

[1] The maximum weight refers to dry items.

[2] The Cottons Eco programme is the "Standard cotton programme" according to Commission Regulation EU No. 392/2012. It is suitable for drying normal wet cotton laundry and it is the most efficient programme in terms of energy consumption for drying wet cotton laundry.

5.1 Programmes and options selection

	Options				
Programmes [1]	**Dryness Level**	**Quiet Mode**	**Anti-crease**	**Refresh**	**Time Drying**
Cottons Eco			■		
Cottons	■	■	■	■	■
Synthetics	■	■	■	■	■
Mixed			■	■	■
Wool					■ [2]
Silk			■		
Bedlinen			■		
Easy Iron			■		
Outdoor					
Duvet					

[1] Together with the programme you can set 1 or more options.

[2] See chapter OPTIONS: Time Drying on Wool programme

5.2 Consumption data

Program	Spun at / residual humidity	Drying time [1]	Energy consumption [2]
	Cottons **ECO**9 kg		
cupboard dry	1400 rpm / 50%	160 min	1,88 kWh
	1000 rpm / 60%	185 min	2,21 kWh

Program	Spun at / residual humidity	Drying time [1]	Energy consumption [2]
iron dry	1400 rpm / 50%	107 min	1,27 kWh
	1000 rpm / 60%	129 min	1,57 kWh
Cottons **ECO** 4,5 kg			
cupboard dry	1400 rpm / 50%	88 min	0,97 kWh
	1000 rpm / 60%	103 min	1,16 kWh
Synthetics 3,5 kg			
cupboard dry	1200 rpm / 40%	56 min	0,56 kWh
	800 rpm / 50%	69 min	0,78 kWh

1) For partial loads, the cycle time is shorter and appliance uses less energy.

2) Improper ambient temperature and/or poorly centrifuged laundry can prolong cycle time and increase the energy consumption.

6. OPTIONS

6.1 Dryness Level

This option helps to achieve requested laundry dryness. Possible selections:

- ready to iron - **iron dry** level.

- ready to store - **cupboard dry** level - default selection which is related to the programme.

- ready to store - **cupboard dry +** level.

- ready to store - **extra dry** level.

6.2 Quiet Mode

The appliance operates with low noise without effect on the drying quality. The appliance operates slowly with longer cycle time.

6.3 ECO

This option is on by default with all programs.

The power consumption is at the minimum level.

6.4 Anti-crease

Extends up to 120 minutes the anti-crease phase (30 minutes) at the end of the drying cycle. After drying phase drum rotates from time to time to prevent creases. Laundry can be removed during the anti-crease phase.

6.5 Refresh

To refresh clothes that were in storage. Maximal load cannot exceed 1 kg.

6.6 Time Drying

For cottons, synthetics and mixed. Lets the user to set drying time from minimum 10 min to maximum of 2 hours (in 10 min steps). When this option is maximum, load indicator disappears.

6.7 Time Drying on Wool program

Option applicable to Wool program to adjust final dryness level to more dry or less dry.

6.8 Delay Start

Lets to delay the start of a drying program from minimum of 30 minutes to maximum of 20 hours.

1. Set the drying program and options.
2. Touch Delay Start button again and again.

Time of delay is on the display (e.g. 12 h if the program has to start after 12 hours.)

3. To activate Delay Start option, touch the Start/Pause button.

Time to start decreases on the display.

6.9 Buzzer

The sound is heard at the:

- cycle end
- start and end of crease guard phase

The buzzer option is by default always on. You can use this option to activate or deactivate the sound.

7. BEFORE FIRST USE

Rear drum packaging is removed automatically when dryer is activated for the first time. Possible to hear some noise.

Before you use the appliance for the first time:

- Clean the tumble dryer drum with a moist cloth.
- Start a 1 hour programme with moist laundry.

At the beginning of the drying cycle (first 3-5 min) there could be a slightly higher sound level. This is due to the compressor starting up. This is normal for compressor powered appliances such as refrigerators and freezers.

8. DAILY USE

8.1 Preparing the laundry

- Close the zips.
- Close the fasteners of duvet covers.
- Do not dry ties or ribbons loose (e.g. apron ribbons). Tie them before you start a programme.
- Remove all items from pockets.
- Turn items with the internal layer made of cotton inside out. Cotton layer must be faced outwards.
- Always set the programme suitable for the type of laundry.
- Do not put light and dark colours together.
- Use suitable programme for cottons, jersey and knitwear to reduce shrinkage.
- Do not exceed the maximum load stated in the programmes chapter or shown on the display.
- Dry only the laundry that is suitable for tumble drying. Refer to the fabric label on the items.
- Do not dry large and small items together. Small items can be trapped inside the large items and remain wet.

Fabric label	Description
	Laundry is suitable for tumble drying.
	Laundry is suitable for tumble drying at higher temperatures.
	Laundry is suitable for tumble drying at low temperatures only.
	Laundry is not suitable for tumble drying.

8.2 Loading the laundry

CAUTION!
Ensure the laundry is not trapped between the appliance door and the rubber seal.

1. Pull open the appliance door.
2. Load the laundry one item at a time.
3. Close the appliance door.

8.3 Turning on the appliance

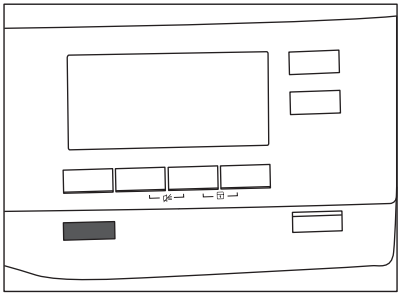

To turn on the appliance:

Push the On/Off button.
If the appliance is on, some indicators appear on the display.

8.4 Auto Off function

To decrease the energy consumption, the Auto Off function turns the appliance off automatically:

- if the Start/Pause touch button is not touched within 5 minutes.
- 5 minutes after a cycle ends.

Push the On/Off button to turn on the appliance.
If the appliance is on, some indications appear on the display.

8.5 Setting a programme

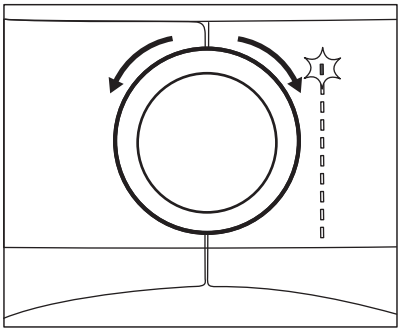

Use the programme dial to set the programme.
The possible time to complete the programme appears on the display.

The drying time you see on the display, when the cotton programme is selected, is related to the load of 5 kg and standard conditions. Real drying time will depend on type of the load (quantity and composition), the room temperature and the humidity of your laundry after spin drying phase.

8.6 Options

Together with the programme you can set 1 or more special options.

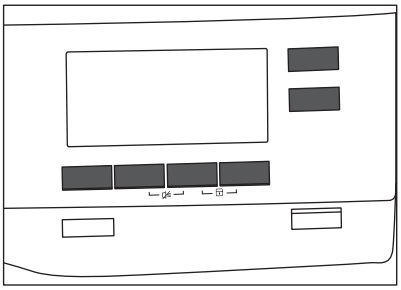

To activate or deactivate an option touch the relevant button or a two button combination.
its symbol appears on the display or the led above the corresponding button lights up.

8.7 Child lock option

The child lock can be set to prevent children from playing with the appliance. The child lock option locks all touch buttons and the program dial (this option does not lock the **On/Off** button).

You can activate the child lock option:

- before you touch the **Start/Pause** button - the appliance cannot start
- after you touch the **Start/Pause** button - programs and option selection is unavailable.

Child lock option activation:

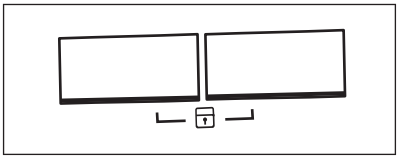

1. Turn the dryer on.
2. Select 1 of the available programs.
3. Touch and hold down 2 buttons at the same time.

The symbol appears on the display.

4. To deactivate the child lock, touch the above buttons again until the symbol disappears.

8.8 Starting a program

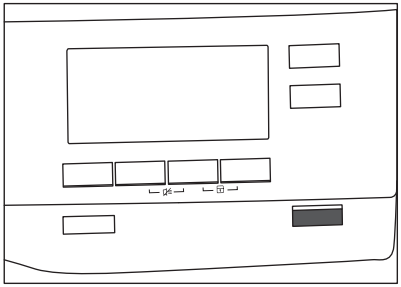

To start the program:

Touch the **Start/Pause** button.
The appliance starts and the LED above the button stops flashing and stays on.

8.9 Program change

To change a program:

1. Push the On/Off button to turn the appliance off.
2. Push the On/Off button again to turn on the appliance.
3. Set a new program.

8.10 Program end

Clean the filter and drain the water container after each drying cycle. (See chapter CARE AND CLEANING.)

If the drying cycle is finished, the symbol appears on the display. If the Buzzer option is activated, the acoustic signal sounds intermittently for 1 minute.

If you do not turn off the appliance, the anti-crease phase starts (not active with all programs). Flashing symbol signals the execution of the anticrease phase. Laundry can be removed during this phase.

To remove the laundry:

1. Push the On/Off button for 2 seconds to turn the appliance off.
2. Open the appliance door.
3. Remove the laundry.
4. Close the appliance door.

9. HINTS AND TIPS

9.1 Ecological hints

- Spin the laundry well before drying.
- Do not exceed the load sizes which are specified in the programs chapter.
- Clean the filter after each drying cycle.
- Do not use fabric softener to wash and then dry. In the tumble dryer laundry becomes soft automatically.
- Use distilled water like that used for steam ironing. If it is necessary, clean the distilled water before (e.g. with a coffee filter) to remove any particles.
- Always keep the airflow slots at the bottom of the appliance clear.
- Make sure there is good airflow where the appliance is to be installed.

9.2 Adjustment of default dryness level

To change the default dryness level:

1. Turn the appliance on.
2. Select 1 of the available programs.
3. Touch and hold down the **Quiet Mode** and **Refresh** buttons at the same time.

One of the symbols appears on the display:

C0_ - Maximum dryness

C0= - Extra dryness

C0≡ - Standard dryness

4. Touch the **Start/Pause** button repeatedly until you reach the desired dryness level.

Dryness level	Display symbol	
Maximum dryness	++	C0_
Extra dryness	+	C0=
Standard dryness		C0≡

5. To memorise the setting touch and hold down the **Quiet Mode** and **Refresh** buttons at the same time for approximately 2 seconds.

9.3 Deactivating the tank indicator

The water container indicator is activated by default. It illuminates at the end of the drying cycle or during the cycle if the water reservoir is full. If the draining kit is installed the water container is drained automatically and the indicator can be deactivated.

To deactivate the indicator:

1. Turn the appliance on.
2. Select 1 of the available programs.
3. Touch and hold down **Refresh** and **Time Drying** buttons at the same time.

One of 2 configurations is possible:

- the Tank indicator: is on if the symbol __1 appears - the water container indicator is permanently **activated**
- the Tank indicator: is off if the symbol __0 appears - the water container indicator is permanently **deactivated**

10. CARE AND CLEANING

10.1 Cleaning the filter

At the end of each cycle the *Filter* symbol comes on the display and you must clean the filter.

The filter collects the fluff during the drying cycle.

1. Open the door. Pull the filter up.

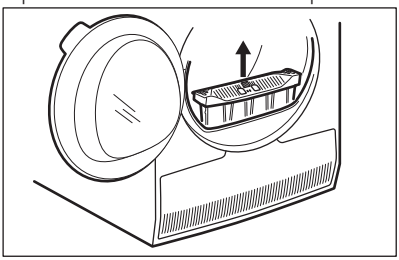

2. Push the hook to open the filter.

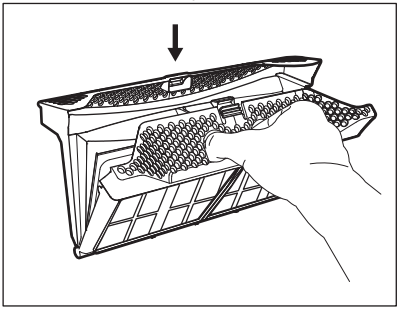

3. Use a moist hand to clean both parts of the filter.

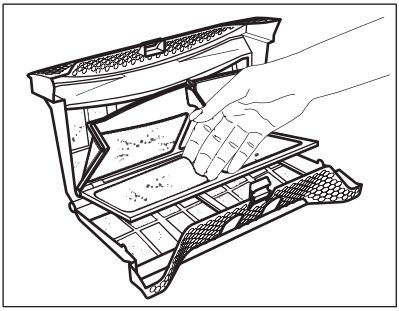

4. If necessary, clean the filter with a vacuum cleaner. Close the filter.

5. If necessary, remove fluff from the filter socket and gasket. You can use a vacuum cleaner. Place the filter back inside the filter socket.

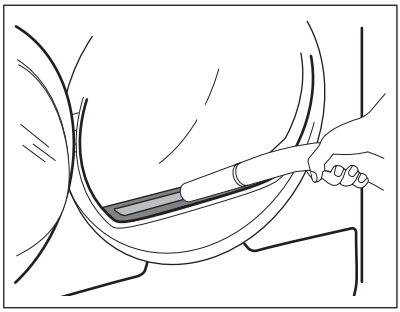

10.2 Emptying the water container

Empty the condensed water container after each drying cycle.

If the condensed water container is full, the programme stops automatically. The *Tank* symbol comes on the display and you must empty the water container.

To empty the water container:

1. Pull the water container out keeping it in a horizontal position.

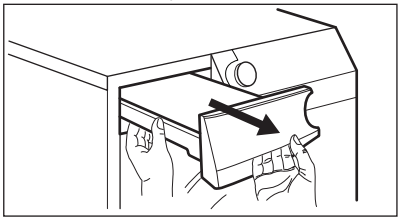

2. Pull the plastic connection out and drain the water into a basin or equivalent receptacle.

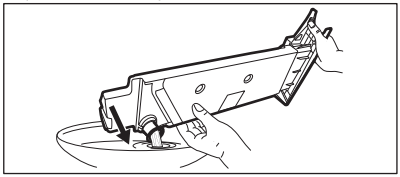

3. Push the plastic connection back in and place the water container back into position.
4. To continue the programme press the Start/Pause button.

10.3 Cleaning the condenser

If the symbol *Condenser* flashes on the display, inspect the condenser and its compartment. If it is dirty, clean it. Do the check not less than once a 6 months.

WARNING!
Do not touch the metal surface with bare hands. Risk of injury. Wear protective gloves. Clean carefully to avoid damaging the metal surface.

To inspect:

1. Open the door. Pull the filter up.

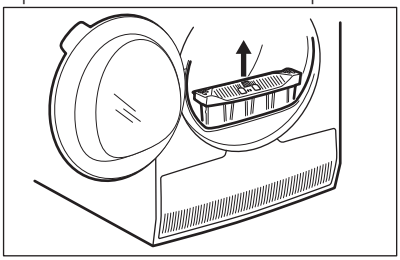

2. Open the condenser cover.

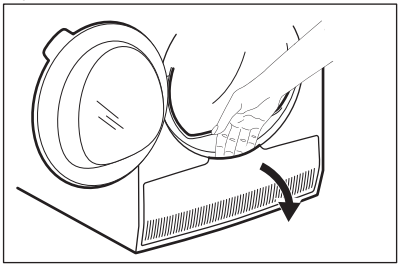

3. Turn the lever to unlock the condenser lid.

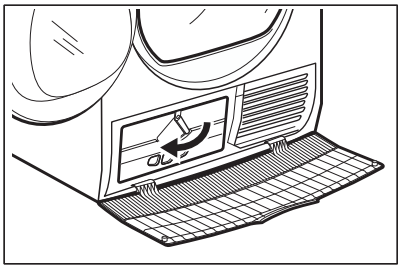

4. Lower the condenser lid.

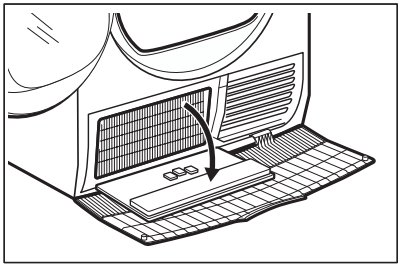

5. If necessary, remove the fluff from the condenser and its compartment. You can use a wet cloth and/or a vacuum cleaner with a brush attachment.

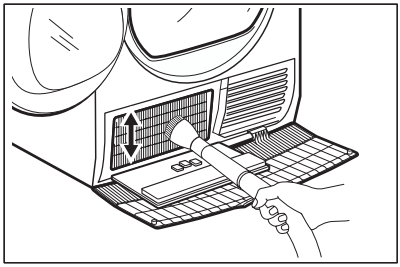

6. Close the condenser lid.
7. Turn the lever until it clicks into position.
8. Put the filter back.

10.4 Cleaning the drum

WARNING!
Disconnect the appliance before you clean it.

Use a standard neutral soap detergent to clean the inner surface of the drum and drum lifters. Dry the cleaned surfaces with a soft cloth.

CAUTION!
Do not use abrasive materials or steel wool to clean the drum.

10.5 Cleaning the control panel and housing

Use a standard neutral soap detergent to clean the control panel and housing.

Use a moist cloth to clean. Dry the cleaned surfaces with a soft cloth.

CAUTION!
Do not use furniture cleaning agents or cleaning agents which can cause corrosion.

10.6 Cleaning the airflow slots

Use a vacuum cleaner to remove fluff from the airflow slots.

11. TROUBLESHOOTING

Problem [1]	Possible cause	Remedy
The tumble dryer does not operate.	The tumble dryer is not connected to the mains supply.	Connect it to the mains socket. Check the fuse in the fuse box (domestic installation).
	The door is open.	Close the door.
	The On/Off button was not pushed.	Push the On/Off button.
	The Start/Pause button was not touched.	Touch the Start/Pause button.
	The appliance is in standby mode.	Push the On/Off button.
Unsatisfactory drying result.	Incorrect programme selection.	Select a suitable programme. [2]
	The filter is clogged.	Clean the filter. [3]
	Dryness Level option was set to *iron dry*. [4]	Change Dryness Level option to a higher level.
	The load was too large.	Do not exceed the maximum load size.
	The airflow slots are clogged.	Clean the airflow slots at the bottom of the appliance.
	There is some dirt on the humidity sensor in the drum.	Clean the front surface of the drum.
	The dryness level was not set to the desired level.	Adjust the dryness level. [5]
	The condenser is clogged.	Clean the condenser. [3]

Problem [1]	Possible cause	Remedy
The loading door does not close	The filter is not locked into position.	Put the filter in the correct position.
	Laundry is trapped between the door and the seal.	Remove trapped items and close the door.
It is not possible to change the programme or option.	After a cycle starts it is not possible to change the programme or option.	Turn the tumble dryer off and on. Change the programme or option as required.
It is not possible to select an option. An acoustic signal is emitted.	The option you tried to select is not available for the selected programme.	Turn the tumble dryer off and on. Change the programme or option as required.
There is no drum light	Defective drum lamp.	Contact the service centre to replace the drum lamp.
Unexpected duration time appears on the display.	The drying duration is calculated according to load size and dampness.	This is automated - the appliance is working correctly.
A programme is inactive.	The water container is full.	Drain the water container, push the Start/Pause button. [3]
The drying cycle is too short.	The load size is small.	Select a time programme. The time value must be related to the load. To dry one item or a small amount of laundry we recommend short drying times.
	The laundry is too dry.	Select an appropriate time programme or a higher dryness level (e.g. ☀ *extra dry*)

Problem [1]	Possible cause	Remedy
Drying cycle too long [6]	The filter is clogged.	Clean the filter.
	The load is too large.	Do not exceed the maximum load size.
	The laundry was not spun sufficiently.	Spin the laundry well in the washing machine.
	Too low or too high room temperature - this is not the appliance malfunction.	Ensure a room temperature higher than +5°C and lower than +35°C. Optimal room temperature to achieve best drying results is between 19°-24°C.

1) If there is an error message on the display (e.g. **E51**): Turn the tumble dryer off and on. Select a new programme. Touch the Start/Pause button. If the appliance does not operate contact the service centre and provide the error code.

2) Follow the programme description — see the PROGRAMMES chapter .

3) See the *CARE AND CLEANING* chapter.

4) Only dryers with the Dryness Level option.

5) See the HINTS AND TIPS chapter .

6) Note: After a maximum of 5 hours the drying cycle ends automatically.

12. TECHNICAL DATA

Height x Width x Depth	850 x 600 x 600 mm (maximal 665 mm)
Max. depth with the appliance door open	1100 mm
Max. width with the appliance door open	950 mm
Adjustable height	850 mm (+ 15 mm - feet regulation)
Drum volume	118 l
Maximum load volume	**9** kg
Voltage	230-240 V
Frequency	50 Hz
Sound power level	65 dB
Necessary fuse	13 A
Total power	900 W
Energy efficiency class	**A++**
Energy consumption on the standard cotton programme with the full load. [1]	**2,21** kWh

Energy consumption on the standard cotton programme with the partial load. [2]	**1,16** kWh
Annual energy consumption[3]	258,70 kWh
Left-on mode power absorption [4]	0,13 W
Off mode power absorption [4]	0,13 W
Type of use	Household
Allowed ambient temperature	+ 5°C to + 35°C
Level of protection against ingress of solid particles and moisture ensured by the protective cover, except where the low voltage equipment has no protection against moisture	**IPX4**
This product contains fluorinated greenhouse gases, hermetically sealed	
Gas designation	R134a
Weight	0,26 kg
Global-warming potential (GWP)	1430

[1] With reference to EN 61121. 9 kg of cotton centrifuged at 1000 rpm.

[2] With reference to EN 61121. 4,5 kg of cotton centrifuged at 1000 rpm.

[3] Energy consumption per year in kWh, based on 160 drying cycles of the standard cotton programme at full and partial load, and the consumption of the low-power modes. Actual energy consumption per cycle will depend on how the appliance is used (REGULATION (EU) No. 392/2012).

[4] With reference to EN 61121.

The information given in the chart above is compliant with the EU Commission regulation 392/2012 implementing directive 2009/125/EC.

13. ACCESSORIES

13.1 Stacking kit

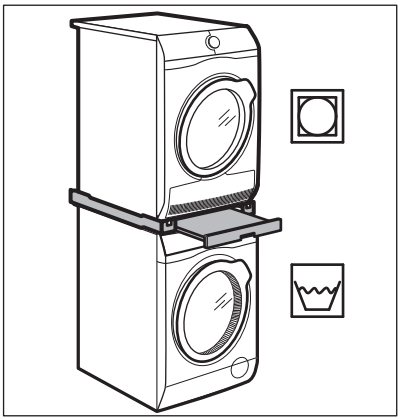

Accessory name: SKP11, STA9

Available from your authorised vendor.

Stacking kit can be used only between washing machines and tumble dryers specified in the leaflet. See the leaflet attached.

Read carefully the instructions supplied with the accessory.

13.2 Draining kit

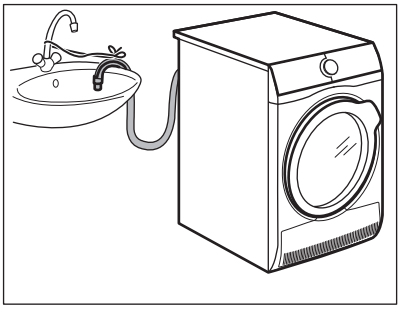

Accessory name: DK11.

Available from your authorised vendor (can be attached to some types of tumble dryer)

For thorough draining of the condensed water into a basin, siphon, gully, etc. After installation, the water container is drained automatically. The water container must stay in the appliance.

The installed hose must be minimum 50 cm to maximum 100 cm from floor level. The hose cannot be in a loop. Decrease the length of the hose if necessary.

Read carefully the instructions supplied with the accessory.

13.3 Pedestal with drawer

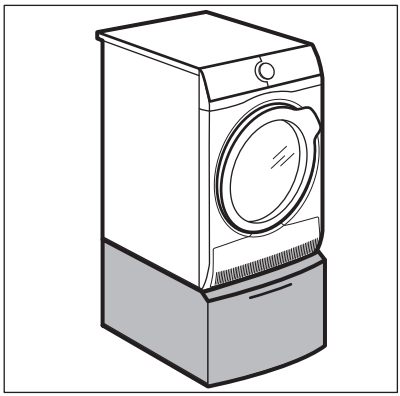

Accessory name: PDSTP10, E6WHPED2.

Available from your authorised vendor.

For increasing the height of the appliance in order to ease loading and unloading of laundry.

The drawer can be used for laundry storage e.g. : towels, cleaning products etc.

Read carefully the instructions supplied with the accessory.

14. QUICK GUIDE

14.1 Daily use

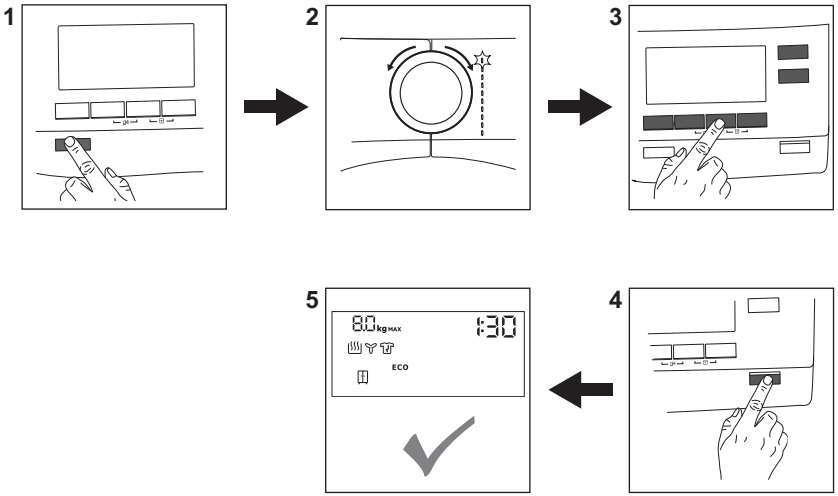

1. Push the **On/Off** button to turn on the appliance.
2. Use the programme dial to set the programme.
3. To activate or deactivate an option touch the relevant button or 2 buttons combination.
4. Touch the **Start/Pause** button.
5. The appliance starts.

14.2 Cleaning the filter

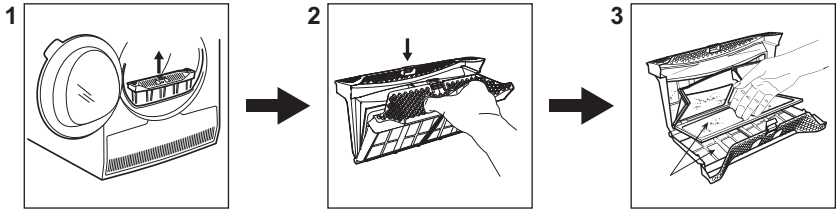

At the end of each cycle the *Filter* symbol comes on the display and you must clean the filter.

1. Open the door. Pull the filter up.
2. Push the hook to open the filter.
3. Use a moist hand to clean both parts of the filter.

14.3 Programme

Programme	Load [1]	Properties / Fabric mark
Cottons Eco	**9 kg**	Cycle to be used to dry cotton with "cotton cupboard" dryness level, with maximum energy saving.
Cottons	**9 kg**	Cycle defined to dry all types of cotton ready to store (cupboard dry).
Synthetics	**3,5 kg**	Synthetic and mixed fabrics.
Mixed	**3 kg**	Cotton and synthetic fabrics.
Wool	**1 kg**	Woollen fabrics. Gentle drying for hand-washable woollens. Remove items immediately when the programme is completed.
Silk	**1 kg**	Gentle drying of hand-washable silks.
Bedlinen	**3 kg**	Bed linen such as single and double sheets, pillowcases, duvet cover.
Easy Iron	**1,5 kg (or 5 shirts)**	Easy care fabrics for which a minimum of ironing is necessary. The drying results can be different from one type of fabric to another. Shake the items before putting them in the appliance. When the programme has ended, immediately remove the items and put them on a hanger.
Outdoor	**2 kg**	Outdoor clothing, technical, sports fabrics, waterproof and breathable jackets, shell jackets with a removable fleece or inner insulation. Suitable for drying in tumble dryer.
Duvet	**3 kg**	Single or double duvets and pillows (with feather, down or synthetic fillings).

[1] The maximum weight refers to dry items.

15. PRODUCT INFORMATION SHEET IN REFERENCE TO E.U. REGULATION 1369/2017

Product Information Sheet	
Trade Mark	AEG
Model	T8DEC946R, PNC916098598
Rated capacity in kg	9
Air vented or condenser tumble dryer	Condenser

Energy efficiency class	A++
Energy consumption in kWh per year, based on 160 drying cycles of the standard cotton programme at full and partial load, and the consumption of the low-power modes. Actual energy consumption per cycle will depend on how the appliance is used.	258,70
Automatic tumble drier or non-automatic tumble drier	Automatic
Energy consumption of the standard cotton programme at full load in kWh	2,21
Energy consumption of the standard cotton programme at partial load in kWh	1,16
Power consumption of the off-mode in W	0,13
Power consumption in left-on mode in W	0,13
Duration of the left on mode in minutes	10
The 'standard cotton programme' used at full and partial load is the standard drying programme to which the information in the label and the fiche relates, this programme is suitable for drying normal wet cotton laundry and it is the most efficient programme in terms of energy consumption for cotton.	
Weighted programme time of the 'standard cotton programme at full and partial load' in minutes	138
Programme time of the 'standard cotton programme at full load' in minutes	185
Programme time of the 'standard cotton programme at partial load' in minutes	103
Condensation efficiency class on a scale from G (least efficient) to A (most efficient)	B
Average condensation efficiency of the standard cotton programme at full load as a percentage	81
Average condensation efficiency of the standard cotton programme at partial load as a percentage	81
Weighted condensation efficiency for the 'standard cotton programme at full and partial load'	81
Sound power level in dB	65
Built in appliance Y/N	No

The information given in the chart above is compliant with the EU Commission regulation 392/2012 implementing directive 2009/125/EC.

16. ENVIRONMENTAL CONCERNS

Recycle materials with the symbol . Put the packaging in relevant containers to recycle it. Help protect the environment and human health by recycling waste of electrical and electronic appliances. Do not dispose of appliances marked with the symbol  with the household waste. Return the product to your local recycling facility or contact your municipal office.

www.aeg.com/shop



136960530-A-042019

CE

AEG