L6FBG841CA

EN **User Manual**
Washing Machine

USER MANUAL

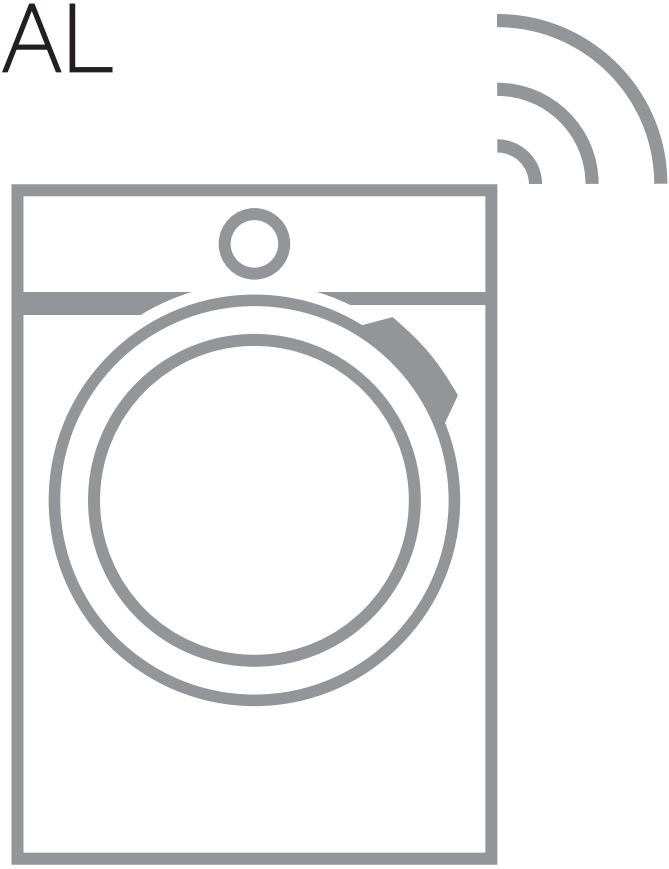

AEG

CONTENTS

1. SAFETY INFORMATION....3
2. SAFETY INSTRUCTIONS....5
3. INSTALLATION....7
4. PRODUCT DESCRIPTION....10
5. CONTROL PANEL....12
6. BEFORE FIRST USE....20
7. THE AUTODOSE TECHNOLOGY (AUTODOSING)....20
8. PROGRAMMES....27
9. WI-FI - CONNECTIVITY SETUP....31
10. DAILY USE....33
11. HINTS AND TIPS....36
12. CARE AND CLEANING....38
13. TROUBLESHOOTING....45
14. CONSUMPTION VALUES....48
15. TECHNICAL DATA....49
16. ACCESSORIES....50
17. QUICK GUIDE....51
18. PRODUCT INFORMATION SHEET IN REFERENCE TO E.U. REGULATION 1369/2017....52



FOR PERFECT RESULTS

Thank you for choosing this AEG product. We have created it to give you impeccable performance for many years, with innovative technologies that help make life simpler - features you might not find on ordinary appliances. Please spend a few minutes reading to get the very best from it.
Visit our website for:



Get usage advice, brochures, trouble shooter, service information:
www.aeg.com/webselfservice



Register your product for better service:
www.registeraeg.com



Buy Accessories, Consumables and Original spare parts for your appliance:
www.aeg.com/shop

CUSTOMER CARE AND SERVICE

Always use original spare parts.
When contacting our Authorised Service Centre, ensure that you have the following data available: Model, PNC, Serial Number.
The information can be found on the rating plate.

⚠ Warning / Caution-Safety information

ⓘ General information and tips

Environmental information

Subject to change without notice.

1. ⚠ SAFETY INFORMATION

Before the installation and use of the appliance, carefully read the supplied instructions. The manufacturer is not responsible for any injuries or damage that are the result of incorrect installation or usage. Always keep the instructions in a safe and accessible location for future reference.

1.1 Children and vulnerable people safety

- This appliance can be used by children aged from 8 years and above and persons with reduced physical, sensory or mental capabilities or lack of experience and knowledge if they have been given supervision or instruction concerning the use of the appliance in a safe way and understand the hazards involved.

- Children between 3 and 8 years of age and persons with very extensive and complex disabilities shall be kept away from the appliance unless continuously supervised.
- Children of less than 3 years of age should be kept away from the appliance unless continuously supervised.
- Do not let children play with the appliance.
- Keep all packaging away from children and dispose of it appropriately.
- Keep detergents away from children.
- Keep children and pets away from the appliance when the door is open.
- If the appliance has a child safety device, it should be activated.
- Children shall not carry out cleaning and user maintenance of the appliance without supervision.

1.2 General Safety

- Do not change the specification of this appliance.
- This appliance is intended to be used in household and similar applications such as:
  - staff kitchen areas in shops, offices and other working environments;
  - by clients in hotels, motels, bed & breakfast and other residential type environments;
  - areas for communal use in blocks of flats or in launderettes.
- Do not exceed the maximum load of 8 kg (refer to the "Programme chart" chapter).
- The operating water pressure at the water entry point from the outlet connection must be between 0.5 bar (0.05 MPa) and 8 bar (0.8 MPa).
- The ventilation opening in the base must not be covered by a carpet, mat, or any floor covering.
- The appliance must be connected to the water mains using the new supplied hose sets, or other new hose sets supplied by the Authorised Service Centre.

- Old hose sets must not be reused.
- If the mains power supply cable is damaged, it must be replaced by the manufacturer, its Authorised Service Centre or similarly qualified persons to avoid an electrical hazard.
- Before any maintenance operation, deactivate the appliance and disconnect the mains plug from the socket.
- Do not use high pressure water sprays and/or steam to clean the appliance.
- Clean the appliance with a moist cloth. Use only neutral detergents. Do not use abrasive products, abrasive cleaning pads, solvents or metal objects.
- If a tumble dryer is stacked on the top of the washing machine, make sure to use the correct stacking kit approved by AEG (see more details in chapter "Accessories - Stacking kit").

2. SAFETY INSTRUCTIONS

2.1 Installation

The installation must comply with relevant national regulations.

- Remove all the packaging and the transit bolts including rubber bush with plastic spacer.
- Keep the transit bolts in a safe place. If the appliance is to be moved in the future they must be reattached to lock the drum to prevent an internal damage.
- Always take care when moving the appliance as it is heavy. Always use safety gloves and enclosed footwear.
- Follow the installation instructions supplied with the appliance.
- Do not install or use a damaged appliance.
- Do not install or use the appliance where the temperature can be less than 0°C or where it is exposed to the weather.
- The floor area on which the appliance is to be installed must be flat, stable, heat resistant and clean.
- Make sure that there is air circulation between the appliance and the floor.
- When the appliance is in its permanent position, check if it is levelled correctly with the aid of a spirit level. If it is not, adjust the feet accordingly.
- Do not install the appliance directly above a floor drain.
- Do not spray water on the appliance and do not expose it to excessive humidity.
- Do not install the appliance where the appliance door cannot be fully opened.
- Do not put a closed container to collect possible water leakage under the appliance. Contact the Authorised Service Centre to ensure which accessories can be used.

2.2 Electrical connection

WARNING!
Risk of fire and electric shock.

- The appliance must be earthed.

- Always use a correctly installed shockproof socket.
- Make sure that the parameters on the rating plate are compatible with the electrical ratings of the mains power supply.
- Do not use multi-plug adapters and extension cables.
- Make sure not to cause damage to the mains plug and to the mains cable. Should the mains cable need to be replaced, this must be carried out by our Authorised Service Centre.
- Connect the mains plug to the mains socket only at the end of the installation. Make sure that there is access to the mains plug after the installation.
- Do not touch the mains cable or the mains plug with wet hands.
- Do not pull the mains cable to disconnect the appliance. Always pull the mains plug.

2.3 Water connection

- Do not cause damage to the water hoses.
- Before connection to new pipes, pipes not used for a long time, where repair work has been carried out or new devices fitted (water meters, etc.), let the water flow until it is clean and clear.
- Ensure that there are no visible water leaks during and after the first use of the appliance.
- Do not use an extension hose if the inlet hose is too short. Contact the Authorised Service Centre for the replacement of the inlet hose.
- When unpacking the appliance, It is possible to see water flowing from the drain hose. This is due to the testing of the appliance with the use of water in the factory.
- You can extend the drain hose to maximum 400 cm. Contact the Authorised Service Centre for the other drain hose and the extension.
- Make sure that there is access to the tap after the installation.

2.4 Use

WARNING!
Risk of injury, electric shock, fire, burns or damage to the appliance.

- Follow the safety instructions on the detergent packaging.
- Do not put flammable products or items that are wet with flammable products in, near or on the appliance.
- Do not wash fabrics which are heavily soiled with oil, grease or other greasy substances. It can damage rubber parts of the washing machine. Prewash such fabrics by hand before loading them into the washing machine.
- Do not touch the glass door while a programme operates. The glass can get hot.
- Make sure that all metal objects are removed from the laundry.

2.5 Service

- To repair the appliance contact the Authorised Service Centre.
- Use original spare parts only.

2.6 Disposal

WARNING!
Risk of injury or suffocation.

- Disconnect the appliance from the mains electrical and water supplies.
- Cut off the mains electrical cable close to the appliance and dispose of it.
- Remove the door catch to prevent children or pets from becoming trapped in the drum.
- Dispose of the appliance in accordance with local requirements for the disposal of Waste Electrical and Electronic Equipment (WEEE).

3. INSTALLATION

WARNING!
Refer to Safety chapters.

3.1 Unpacking

WARNING!
Remove all the packaging and the transit bolts before installing the appliance.

WARNING!
Use the gloves.

1. Use a cutter to cut through external film.

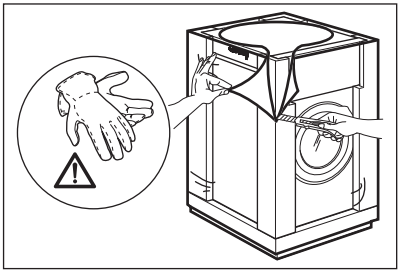

2. Remove the external film.

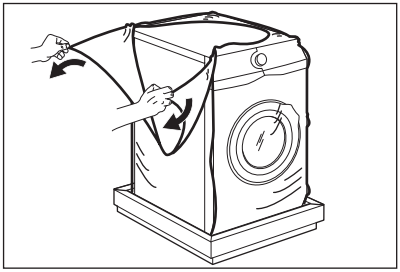

3. Remove the cardboard top and the polystyrene packaging materials.

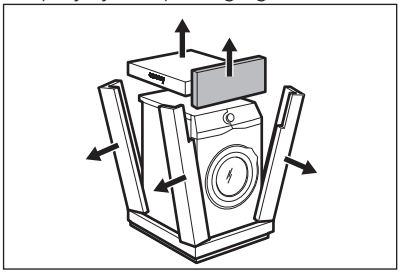

4. Open the door and remove the polystyrene piece from the door seal and all the items from the drum.

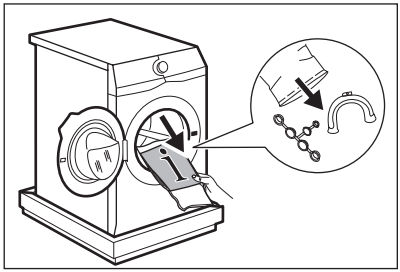

5. Put the front polystyrene packaging element on the floor behind the appliance.
6. Carefully put down the appliance with the rear side on it.

Make sure not to damage the hoses.

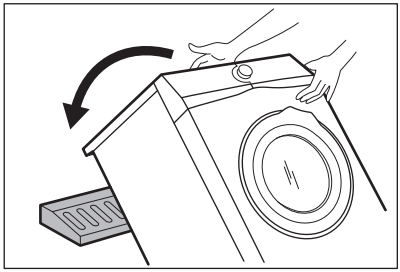

7. Remove the polystyrene protection from the bottom.

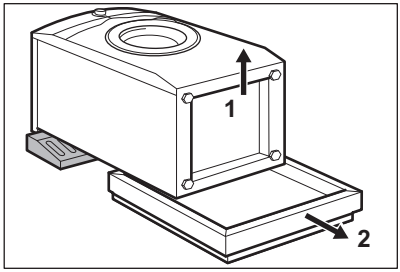

8. Pull up the appliance in vertical position.

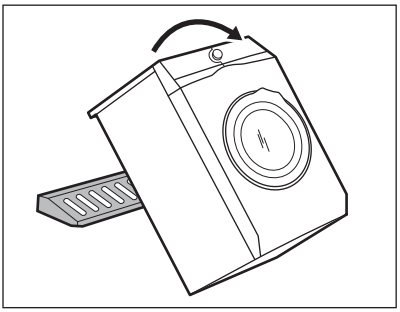

9. Remove the power supply cable and the drain hose from the hose holders.

It is possible to see water flowing from the drain hose. This is due to the testing with water of the appliance in factory.

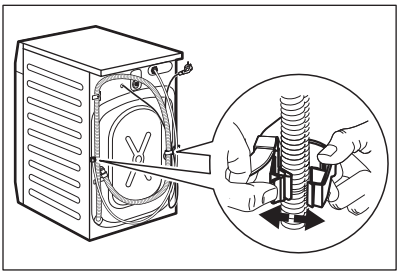

10. Remove the three bolts by using the key supplied with the appliance.

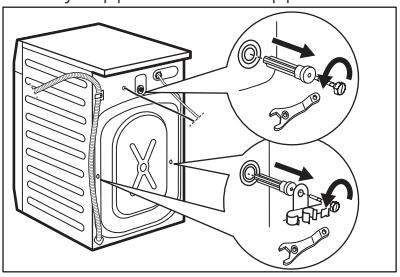

11. Pull out the plastic spacers.
12. Put the plastic caps, that you find in the user manual bag, in the holes.

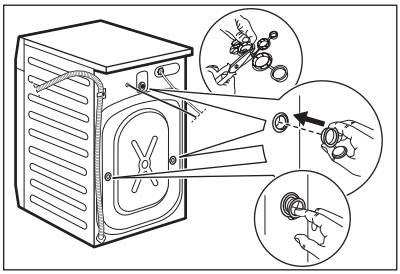

We recommend that you keep the packaging and the transit bolts for any movement of the appliance.

3.2 Positioning and levelling

1. Install the appliance on a flat hard floor.

Make sure that carpets do not stop the air circulation below the appliance. Make sure that the appliance does not touch the wall or other units.

2. Loosen or tighten the feet to adjust the level.

WARNING!
Do not put cardboard, wood or equivalent materials below the appliance feet to adjust the level.

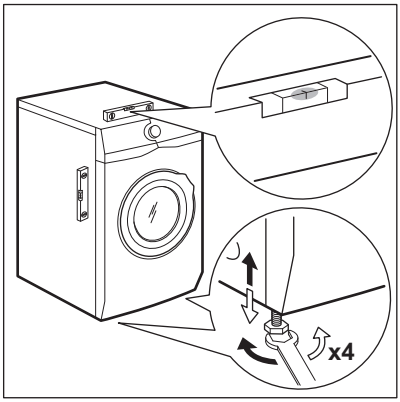

The appliance must be level and stable.

A correct adjustment of the appliance level prevents the vibration, noise and the movement of the appliance when in operation.

When the machine is installed on a plinth or if a washer dryer is stacked on the washing machine, use the accessories described in chapter 'Accessories'. Read carefully the instructions supplied with the appliance and with the accessory.

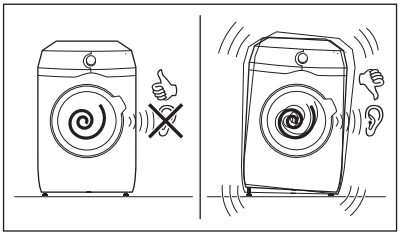

3.3 The inlet hose

1. Connect the water inlet hose to the back of the appliance.
2. Position it toward left or right depending on the position of the water tap.

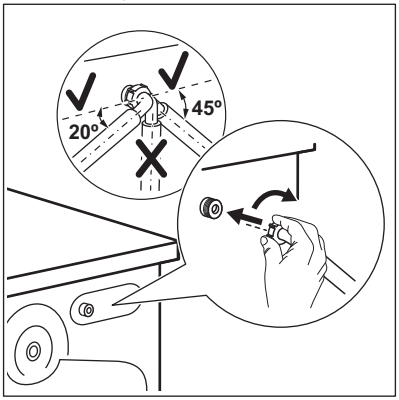

Make sure that the inlet hose is not in vertical position.

3. If necessary, loose the ring nut to set it in the correct position.
4. Connect the water inlet hose to the cold water tap with 3/4" thread.

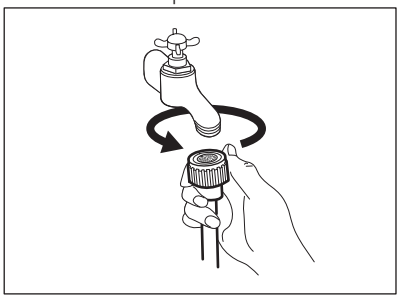

CAUTION!
Make sure that there are no leaks from the couplings.

Do not use an extension hose if the inlet hose is too short. Contact the service centre for the replacement of the inlet hose.

3.4 Water drainage

The drain hose should be positioned at a height of not less than 60 cm and not more than 100 cm from the floor.

You can extend the drain hose to maximum 400 cm. Contact the authorized service centre for the other drain hose and the extension.

It is possible to connect the drain hose in different ways:

1. Make a U shape with the drain hose and put it around the plastic hose guide.

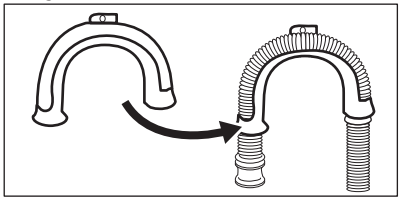

2. **On the edge of a sink** - Fasten the guide to the water tap or to the wall.

Make sure that the plastic guide cannot move when the appliance drains.

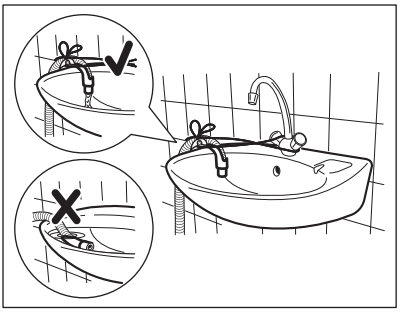

Make sure that the drain hose end is not immersed in the water. There may be a return of dirty water into the appliance.

3. **To a stand pipe with vent-hole** - Insert the drain hose directly into a drain pipe. Refer to the illustration.

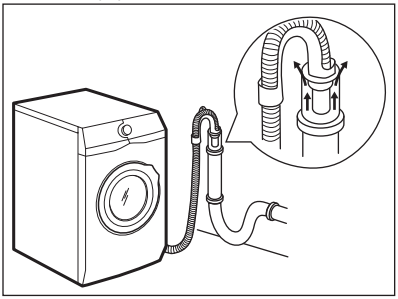

The end of the drain hose must always be ventilated , i.e. the inner diameter of the drain pipe (min. 38 mm - min. 1.5") must be larger than the external diameter of the drain hose.

4. If the end of the drain hose looks like this (see the picture), you can push it directly into the stand pipe.

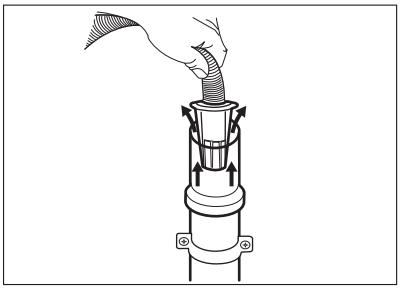

5. **Without the plastic hose guide, to a sink spigot** - Put the drain hose in the spigot and tighten it with a clamp. Refer to the illustration.

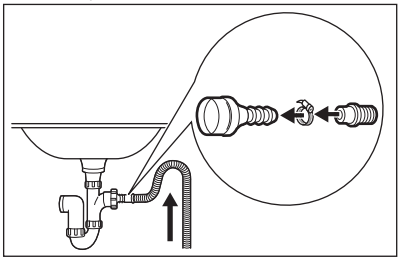

Make sure that the drain hose makes a loop to prevent particles going into the appliance from the sink.

6. Position the hose **directly to a built-in drain pipe in the room wall** and tighten it with a clamp.

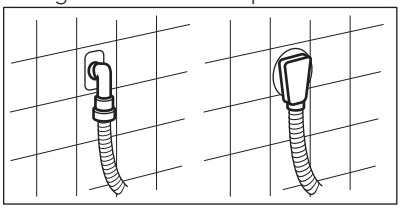

4. PRODUCT DESCRIPTION

4.1 Special features

Your new washing machine meets all modern requirements for an effective treatment of laundry with low water, energy and detergent consumption and proper care of fabric.

- The **AutoDose technology** automatically dispenses the right

amount of detergent according to the load; the drawer has two integrated tanks (detergent + softener) and two additional compartments for detergent and additives manual load. It gives the highest use flexibility.
- The **Wi-Fi connection** and **Remote Start** enable you to start a cycle, to interact with your washing machine and to check the washing cycle status in remote control.
- The **ProSense technology** detects the laundry load size defining the programme duration in 30 seconds. The washing programme is tailored to the laundry load and the type of fabric without consuming more time, energy and water than necessary.
- The **Intensive option** pre-treats stubborn stains optimizing the effectiveness of washing performance.

4.2 Appliance overview

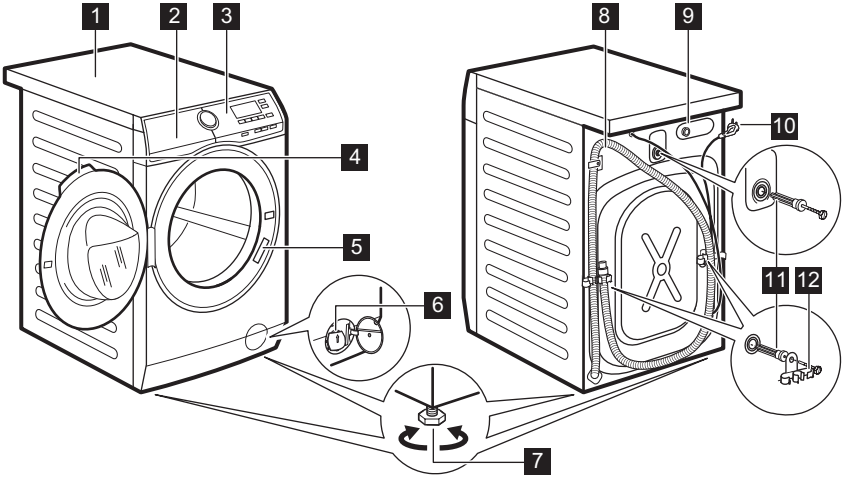

1 Worktop
2 Detergent dispenser with AutoDose tanks and manual compartments
3 Control panel
4 Door handle
5 Rating plate
6 Drain pump filter
7 Feet for levelling the appliance
8 Drain hose
9 Inlet hose connection
10 Mains cable
11 Transit bolts
12 Hose support

5. CONTROL PANEL

5.1 Control panel description

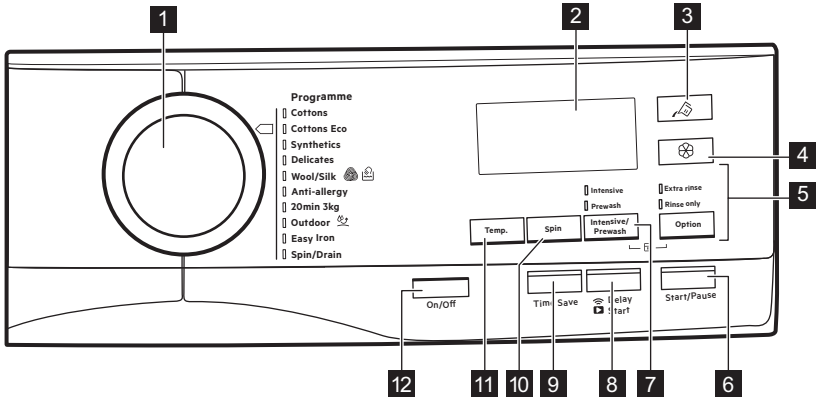

The options are not selectable with all washing programmes. Check the compatibility between options and washing programmes in the "AutoDose and options compatibility with programmes" paragraph in the "Programmes" chapter. An option can exclude another one, in this case the appliance doesn't allow you to set the incompatible options together. Make sure the screen and touch buttons are always clean and dry.

1	**Programme dial**	For selecting the desired washing programme. Refer to "Programmes" chapter for more details.
2	**Display**	It provides information about the setting programme. Refer to "Display" paragraph for more details.
3	**AutoDose Liquid Detergent touch button**	For activating and deactivating the automatic detergent loading. Refer to "The AutoDose Technology (Autodosing)" chapter for more details.
4	**AutoDose Fabric Softener touch button**	For activating and deactivating the automatic detergent loading. Refer to "The AutoDose Technology (Autodosing)" chapter for more details.

5	**Option touch button**	Press this button repeatedly to activate one of the two following options: • Extra Rinse option This option adds a few rinses according to the selected washing programme. Use this option for persons allergic to detergent residues and in areas where the water is soft. This option increases slightly the programme duration. • Skipping wash phase - Rinse only option The appliance performs only the rinsing phase, the spinning and the draining phases of the selected programme. The corresponding indicator above the touch button illuminates.
6	**Start/Pause touch button**	Touch this button to start, pause the appliance or interrupt a running programme.

7	**Intensive/ Prewash touch button**	Press this button repeatedly to activate one of the two options or both. The relevant indicator comes on. • **Intensive** By setting this option, the indicator + appears close to detergent symbol, and the appliance will automatically dose an extra amount of detergent when automatic detergent tank is enabled. 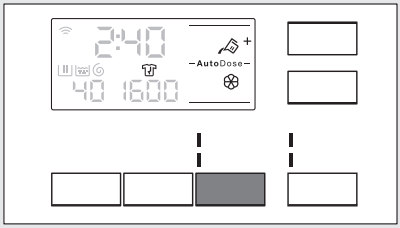 If automatic detergent tank is Off, it is possible to run this option as in traditional washing machine by filling detergent or additive in the manual compartment. If you press detergent tank button while Intensive option is active, AutoDose function is switched off, but Intensive option still remains active in manual mode. • **Prewash** Use this option to add a pre-wash phase at 30 °C before the washing phase. This option is recommended for heavily soiled laundry, especially if containing sand, dust, mud and other solid particles. When selecting a pre-wash phase and AutoDose is active, the appliance will automatically dose the detergent. When AutoDose is switched off, put the detergent/additive in a dosing ball inside the drum. The options can increase the programme duration.

8	**Remote/Delay Start touch button**	Press this button repeatedly to activate one of the two options or both. The relevant indicator comes on in the display. • **Remote** Select this option to connect appliance with App. Touch this button, the display shows the indicator APP blinking for a few seconds. After touching the Start/Pause button, the display shows the indicator and the Remote is confirmed. When touching the Start/Pause button after the indicator APP stops blinking, the Remote Start is not activated, but the set programme starts. • **Delay Start** With this option you can delay the start of a programme in a more convenient time. Touch the button repeatedly to set the required delay. The time increases by steps of 30 minutes up to 90' and from 2 hours up to 20 h. After touching the Start/Pause button, the display shows the indicator and the selected delay time and the appliance begins the countdown.
9	**Time Save touch button**	With this option you can decrease the programme duration: • **Daily** If your laundry is normally or lightly soiled, it may be advisable to shorten the washing programme. Touch this button **once** to decrease the duration. • **Super Quick** In case of smaller load, touch this button **twice** to set an extra quick programme.

10	**Spin touch button**	When you set a programme, the appliance automatically selects the maximum spin speed. Touch this button repeatedly to: • **Decrease the spin speed.** The display shows only the spin speeds available for the set programme. • **Activate the Rinse Hold option** . The water of the last rinse is not drained out to prevent the fabrics from creasing. The washing programme ends with water in the drum and the final spin phase is not performed. The display shows the indicator . The door stays locked. The drum turns regularly to reduce creasing. You must drain the water to unlock the door. Touch Start/Pause button: the appliance performs the spinning phase and drains the water. • **Activate the Extra Silent option.** All spinning phases (intermediate spin and final spin) are suppressed and the programme ends with water in the drum. This helps to reduce creasing. As the programme is very quiet, it is suitable for use at night time when cheaper electricity tariffs are available. In some programmes the rinses are performed with more water. The display shows the indicator . The door stays locked. The drum turns regularly to reduce creasing. You must drain the water to unlock the door. Touch the Start/Pause button button: the appliance performs only the draining phase. The appliance empties the water out automatically after approximately 18 hours.

		By means of Spin touch button, you can also set: • Drain only **Activate the drain-only option** (**Skipping the wash, rinse and spin phases**): The appliance performs the only draining phase of the selected washing programme. The display shows the indicator – – (cold), the indicator – – – (no spin) and the indicator 🌀. • Spin only **Activate the spin-only option** (**Skipping the wash and rinse phases**): ⓘ Before setting this option, select a suitable washing programme for the garments. The appliance will performs the most fitting spin cycle for your garments care (e.g. For synthetics items, first select the Synthetics washing programme and then the Spin only option). The appliance performs only the spinning phase of the selected washing programme. The display shows the indicator – – (cold), the phase indicator 🌀 and the spin speed.
11	**Temp. touch button**	When you select a washing programme, the appliance automatically proposes a default temperature. Touch this button repeatedly until the desired temperature value appears on the display. When the display shows the indicators ✳ and – –, the appliance does not heat the water.
12	**On/Off push button**	Pressing this button for a few seconds allows to activate or deactivate the appliance. Two different tunes sound while switching the appliance on or off. ⓘ As the Stand-by function automatically deactivates the appliance to decrease the energy consumption in a few cases, you may need to activate the appliance again. Refer to "Stand-by option" paragraph in "Daily Use" chapter for more details.
	Permanent Extra Rinse	With this option you can permanently have an extra rinse. To **activate/deactivate** this option touch the Spin button and the Intensive/Prewash button simultaneously, the relevant indicator + **comes on/goes off** over rinse phase symbol. This option adds two rinses.

Child Lock	With this option you can prevent that the children play with the control panel. To **activate/deactivate** this option, touch the Intensive/Prewash and the Option buttons simultaneously until the indicator **comes on/goes off** on the display. You can activate this option: • After you touch the Start/Pause button: all the buttons and the programme dial are deactivated (except On/Off button). • Before you touch the Start/Pause button: the appliance cannot start. The appliance keeps the selection of this option after you switch it off.
Acoustic signals	This appliance is provided with different acoustic signals, that operate when: • You activate the appliance (special short tune). • You deactivate the appliance (special short tune). • You touch the buttons (click sound). • You make a wrong selection (3 short sounds). • The programme is completed (sequence of sounds for about 2 minutes). • The appliance has a malfunction (sequence of short sounds for about 5 minutes). To **deactivate/activate** the acoustic signals when the programme is completed, touch the Intensive/Prewash and the Delay Start buttons simultaneously for about 6 seconds. If you deactivate the acoustic signals, they continue operate when the appliance has a malfunction.

5.2 Display

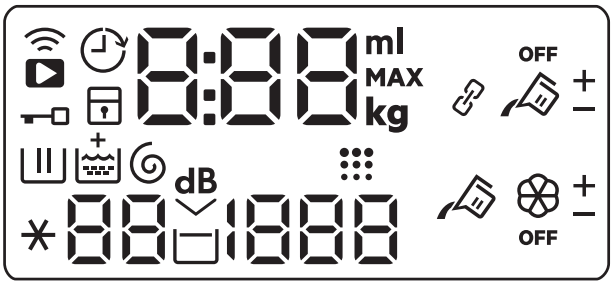

8.0kg	Maximum load indicator. The **kg** indicator flashes during the laundry load estimation (refer to ProSense load detection paragraph) .

MAX	Maximum laundry indicator. It blinks if the laundry amount exceeds the declared load.
	Remote connection indicator.
	Wi-Fi connection indicator.
	Door locked indicator.
	Delay start indicator.
	The digital indicator can show: • Programme duration (e. g.). • Delay time (e. g. or). • Cycle end (). • Warning code (e.g.).
	Washing phase indicator. It flashes during pre-wash and wash phase.
	Rinsing phase indicator. It flashes during rinse phase.
	The + indicator appears, when the Extra rinse option is activated
	Spinning and draining phase indicator. It flashes during spin and drain phase.
	Drum clean indicator. This is a recommendation to perform the drum cleaning.
	Child safety lock indicator.
	Spin speed indicator.
	Rinse hold indicator.
	Extra Silent indicator.
	Temperature indicator. The * indicator appears when a cold wash is set.
	Liquid additives quantity indicator (refer to "The AutoDose" paragraph).
	AutoDose detergent tank indicator. When it lights, appliance automatically dose amount of detergent.
	AutoDose softener tank indicator. When it lights, appliance automatically dose amount of softener.
OFF	AutoDose status indicator. It lights when AutoDose functionality for additives is disable.

	Linked mode indicator. It lights when both compartments are linked and filled with the same detergent. AutoDose functionality for softener, is disable.
+ −	These indicators will appear next to detergent tank and softener tank indicators when increasing or decreasing the automatic detergent or softener dosage.

6. BEFORE FIRST USE

During installation or before first use you may observe some water in the appliance. This is a residual water left in the appliance after a full functional test in the factory to ensure the appliance is delivered to customers in perfect working order and is no cause for concern.

1. Make sure that all transit bolts have been removed from the appliance.
2. Make sure that the electrical power is available and the water tap is open.
3. Make sure to fill the AutoDose tanks with liquid detergent and fabric softener . Refer to "AutoDose basic setting " paragraph in "The AutoDose technology" chapter.
4. Pour 2 litres of water inside the drum.

This action activates the drain system.

5. Set and start a programme for cotton at the highest temperature without any laundry in the drum.

This removes all possible dirt from the drum and the tub.

7. THE AUTODOSE TECHNOLOGY (AUTODOSING)

Read this chapter carefully.

7.1 Introduction

Right detergent and fabric softener dosage takes better care of the laundry and ensuring good wash performances.

Too much detergent damages your clothes and too little doesn't ensure good wash performances.

This appliance is equipped with an auto dosing system able to automatically provide the right detergent and fabric softener dosage to preserve the fabric integrity and colour brightness.

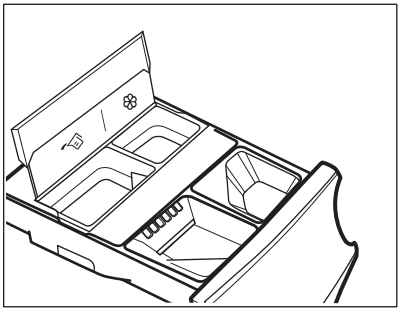

AutoDose detergent tank.

AutoDose fabric softener tank.

The appliance is pre-set by the factory to suit most users habits.

Once started the programme, the appliance will automatically release the right amount of detergent and softener according to the real fabric load, if the

indicators and/or are on in the display.

In some programmes, AutoDose is OFF (**OFF** is on and the indicators and/or are off in the display) because there are garments requiring special detergents or treatments. When **OFF** is on, pour the detergent and other treatments in the proper manual filling compartment. Please refer to "AutoDose and options compatibility with programmes" in "Programmes" chapter.

Further explanations on AutoDose and activation of advanced settings are available downloading the APP.

7.2 Detergent dispenser with AutoDose tanks and manual compartments

When using detergent and any other treatments, always follow the instructions that you find on the packaging of the detergent products. Anyway, we recommend not to exceed the maximum indicated level in each compartment (**MAX**).

If both AutoDose tanks are enabled in the set programme, liquid detergent and fabric softener are automatically loaded.

If one of the AutoDose tank or both are disabled (OFF) in the set programme, proceed by manually filling the product in the proper compartment.

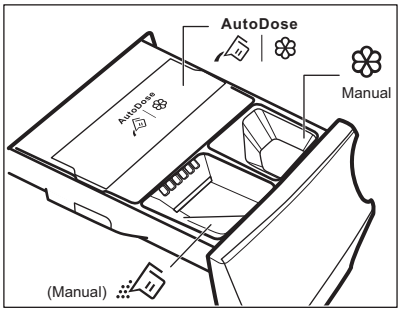

WARNING!
Do not put powder detergent in the AutoDose compartment.

- AutoDose tanks for **liquid detergent** and **fabric softener** .
- Manual compartment for washing phase: **powder or liquid detergent**.

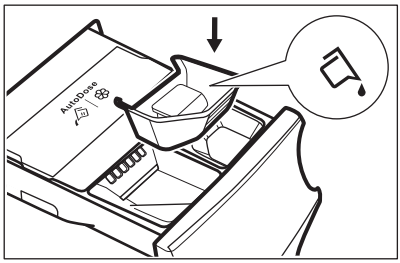

When using liquid detergent, make sure that the **special container for liquid detergent** is inserted. Refer to the "Manual filling the detergent and additives" paragraph in this chapter. The liquid detergent container is supplied inside the drum.

- Manual compartment for **liquid** additives (fabric softener, fabric conditioner, starch).
- **MAX** Maximum level for detergent/ additives quantity.

7.3 AutoDose basic setting

The factory pre-set doses for a large load are 90 ml for detergent tank and 25 ml for fabric softener tank: the optimal configuration to meet majority of use condition. Based on this setting, the appliance will calculate the precise dosage for each wash.

However, under extreme conditions (very soft or very hard water) and particular type of detergent (such as super compact), we recommend to adjust the pre-set dosage by following the indication given on detergent and fabric softener container: e.g when using super compact detergent you may need to reduce the pre-set dosage considerably.

If the washing results are not satisfying or there is too much foam during washing, you may need to change the factory setting. Read in the paragraph 'AutoDose configuration mode' how to change the basic setting, but before:

1. **Identify the water hardness level.** Check the water hardness level in your area. The levels are generally indicated as: soft, medium and hard. If necessary, please contact your local water authority to check the water hardness in your area.
2. **Identify the customized detergent dosage.** Check the label in the detergent/ fabric softener container suggesting the quantity to use. This suggestion is measured combining three different factors:
   - Water hardness level (see the following table);
   - Normal soil level;
   - Rated capacity of the appliance (e.g. maximum load capacity 8 kg). If the rated capacity on the product container refers to lower capacity appliances, the customized dosage should be increased.

Water hardness levels

Levels	Water hardness range				
	°f[1)]	°d[2)]	°e[3)]	mmol/l	ppm
Soft	<15	<8	<10	<1.4	<140
Medium[4)]	15 - 25	8 - 14	0 - 17	1.5 - 2.5	150 - 250
Hard	>25	>14	>17	>2.5	>250

1) French degrees

2) German degrees

3) English degrees

4) Factory setting, able to satisfy most of the use conditions.

7.4 AutoDose configuration mode

Enter the AutoDose configuration mode before proceeding with any programme setting. The configuration mode may cancel temporary settings .

1. Press the On/Off button for a few seconds to activate the appliance.
2. Wait about 10 seconds for appliance internal check.
3. To enter in configuration mode, hold pressed the Temp. and the Spin buttons simultaneously for a few seconds until the display shows the SEt on the left in the display and blinking detergent tank and softener tank indicators on the right in the display.

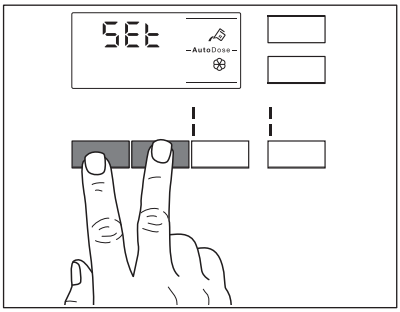

4. Touch related tank buttons to toggle function off and on. The display shows OFF when a tank is disabled or shows tank indicator when it is enabled.

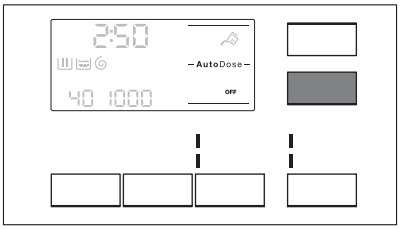

5. To set basic dosage touch related tank buttons until default dosage laundry product and two arrows on bottom of display appear. Touch the Temp. button repeatedly to adjust the dosage upwards and the Spin button to adjusts it downwards. Minimum step is 1 ml.

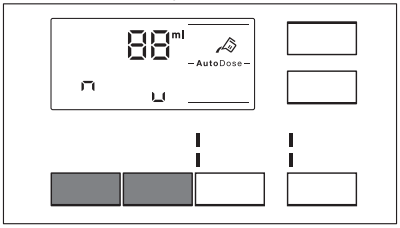

6. After about 10 seconds the display returns to the programme information screen or hold pressed the Temp. and the Spin buttons again to exit immediately.

7.5 Filling the detergent and additives on AutoDose system

Please read "Detergents and other treatments" in "Hints and tips" chapter.

We recommend that you do not exceed the maximum indicated level (**MAX**).

1. Open the detergent dispenser.

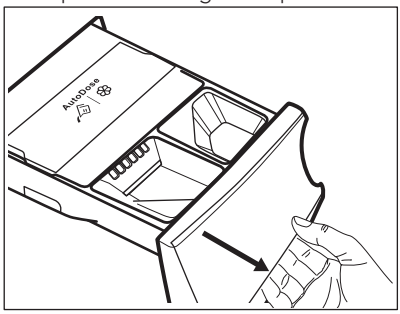

2. Lift up the AutoDose cover lid.

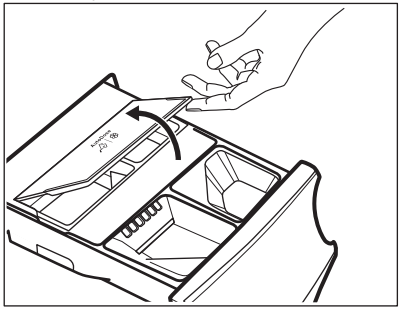

3. Gently pour only liquid detergent in the AutoDose detergent tank . Fill up to the maximum indicated level **MAX**.

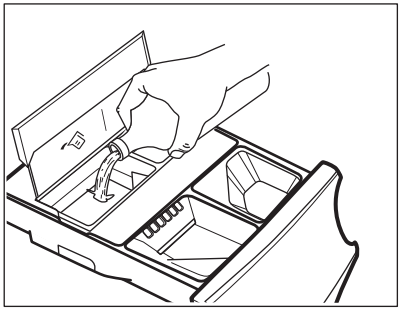

4. Gently pour only liquid softener in the AutoDose fabric softener tank ❀. Fill up to the maximum indicated level **MAX**.

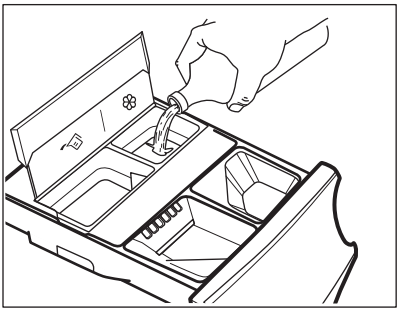

5. Lift down the AutoDose cover lid.

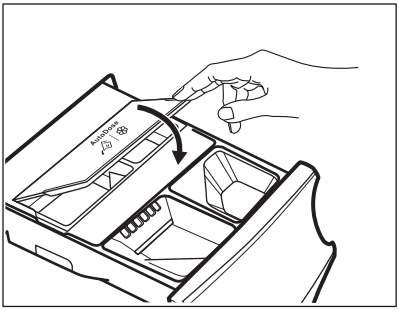

6. Gently close the detergent dispenser, till click engagement.

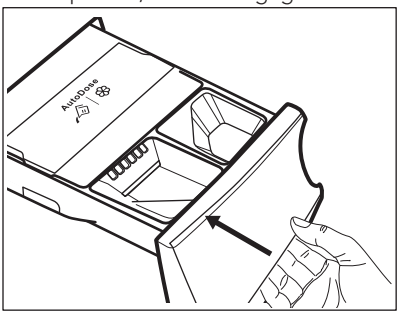

7.6 AutoDose low level indication

Do not refill the AutoDose tanks unless appliances indicates that one or both tanks are empty.

When the activated tank reaches a low level of detergent, related indicator blinks slowly and continuously on the display.

It will stop blinking when the compartment is refilled.

If tank is not refilled, once a programme has started, the indicator will stop blinking and stay steadily lit. Once the programme is finished, it will start blinking again.

Unless AutoDose is turned OFF, if a compartment has reached low level, the set dosage for that compartment will be shown by the display for a few seconds each time the drawer is opened, to remind refill is needed.

If in both tanks detergent level is low, both indicators blink, but only the set dosage for detergent will be displayed.

If the tanks are filled before the appliance is powered on for the first time, the AutoDose indicator will not blink.

CAUTION!
The tanks refill must be carries out with the same brand and type of detergent/fabric softener/ additive used before, otherwise clean the tanks before refilling.

7.7 Switching from AutoDose to manual dosing

It is possible to disable AutoDose function for one or both tanks by pressing related button symbol.

Example:

- To switch Fabric Softener tank off, press the ❀ button until the display shows **OFF**.

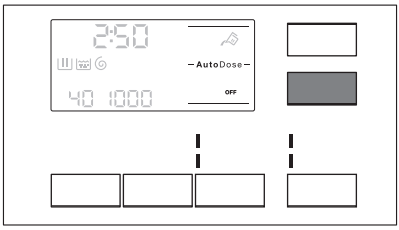

- If you need to use different detergent than ones present in AutoDose tanks, you could switch Detergent tank off by pressing button until the display shows **OFF**.

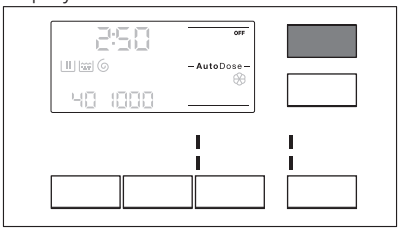

7.8 Deactivating the AutoDose

If you prefer to use the compartments for manual filling as default choice, you can deactivated the AutoDose tanks completely.
Once you have entered the AutoDose configuration mode by pressing Temp. and the Spin buttons:

1. Tap on the button or button until display shows OFF : the AutoDose is excluded completely for related tank or both.

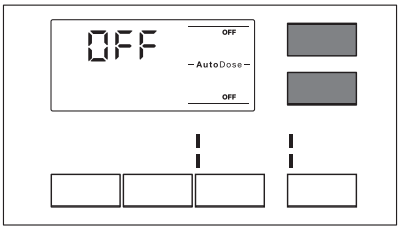

2. After about 10 seconds the display returns to the programme information screen.

7.9 Manual filling the detergent and additives

You may need to use a different detergent or fabric softener than the ones used in the AutoDose tanks. First, make sure that the AutoDose tanks are disabled and then pour the detergent and/or other treatments in the manual compartments.

Do not exceed the maximum indicated level (**MAX**).

1. Open the detergent dispenser.

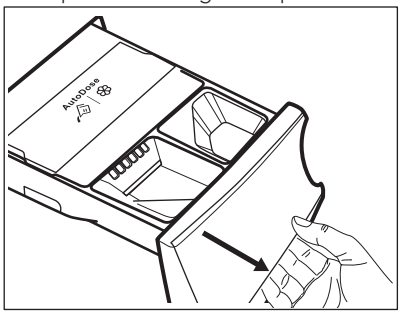

2. Put the powder detergent in the compartment . When using liquid detergent, refer to "Manual filling the liquid detergent".

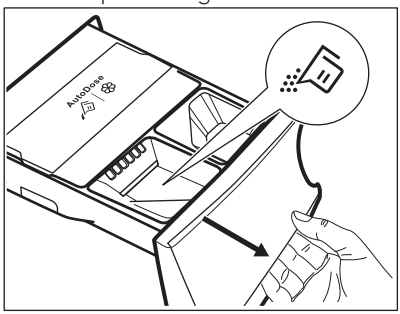

3. If desired, pour the fabric softener in the compartment Manual .

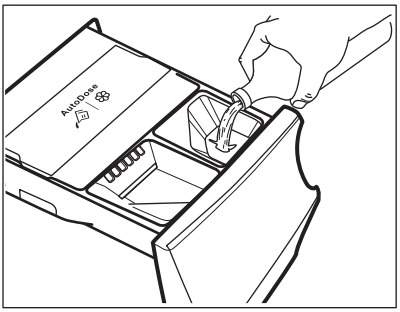

4. Gently close the detergent dispenser, till click engagement.

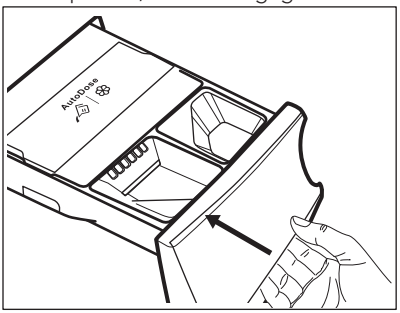

Manual filling the liquid detergent

1. Insert the container for liquid detergent.

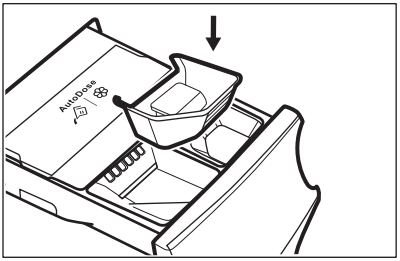

2. Pour the liquid detergent in the compartment .

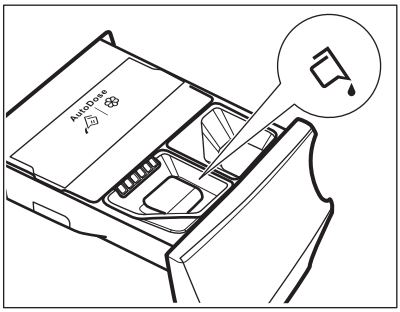

3. Gently close the detergent dispenser, till click engagement.

If the machine has not been used for more than 4 weeks with filled tanks, detergent/ softener can become viscous or dry out. It is needed to clean the drawer as indicated in 'Care and Cleaning' chapter.

7.10 Drawer open indication

When a programme is running, the detergent drawer must always be closed.

A sensor in the drawer detects if the drawer is open (or not properly closed) while the programme is running. In such case, the appliance will immediately be paused.

If you press the Start/Pause ▷‖ button, an error sound is generated and everything in the display will turn off except the AutoDose indicators remain lit for a few seconds. Then the display returns to the previous paused state.

This will happen even if the user turned AutoDose off.

To restart the programme, ensure the drawer is properly closed and press Start/Pause ▷‖ button.

8. PROGRAMMES

8.1 Programme Chart

Washing programmes

Programme	Programme description
Washing programmes	
Cottons	**White and coloured cotton** heavily and normally soiled cotton items.
Cottons Eco	**White and coloured cotton** heavily and normally soiled cotton items. **Standard programmes for the Energy Label consumption values.** According to regulation 1061/2010, the programmes Cottons Eco at 60 °C and the programme Cottons Eco at 40 °C are respectively the «Standard 60°C cotton programme» and the «Standard 40°C cotton programme». They are the most efficient programmes in terms of combined energy and water consumption for washing normally soiled cotton laundry. Powder detergent and fabric softener have to be filled in the proper manual compartment. Make sure that the Auto-Dose tanks are disabled. The water temperature of the washing phase may differ from the temperature declared for the selected programme.
Synthetics	**Synthetic items or mixed fabric items**. Normal soil.
Delicates	**Delicate fabrics such as acrylics, viscose and mixed fabrics requiring gentler washing**. Normal soil.
Wool/Silk	**Machine washable wool, hand washable wool and other fabrics** with «hand washing» care symbol[1)].
Anti-allergy	**White cotton items**. This programme removes micro-organisms thanks to a washing phase with the temperature maintained above 60°C for several minutes. This helps remove germs, bacteria, micro-organism and particles. An additional rinsing phase ensures a proper removal of detergent residues and pollens/allergenic items. In this way the wash is more effective.
20min 3kg	**Cotton and synthetic items** lightly soiled or once worn.

Programme	Programme description
Outdoor	Do not use fabric softener and make sure that there is no softener residue in the detergent dispenser. **Outdoor clothing, technical, sport fabrics, waterproof and breathable jackets, shell jackets with a removable fleece or inner insulation**. The recommended laundry load is 2,5 kg. This programme can also be used as water-repellent restoring cycle, specifically tailored for treating clothes with a hydrophobic coating. To perform the water-repellent restoring cycle, proceed as follows: • Pour the washing detergent in the compartment . • Pour a special water-repellent restorer for fabric in the drawer compartment for fabric softener Manual . • Reduce the laundry load to 1 kg. To further improve the water-repellent restoring action, dry the laundry in a tumble dryer by setting the Outdoor drying programme (if available and if the garment care label permits tumble drying).
Easy Iron	**Synthetic items requiring a gentle wash**. Normal and light soil.[2]
Spin/Drain	**All fabrics, except woollens and delicate fabrics**. To spin the laundry and to drain the water in the drum.

[1] During this cycle the drum rotates slowly to ensure a gentle wash. It can seem that the drum doesn't rotate or doesn't rotate properly, but this is normal for this programme.

[2] To reduce creasing, this cycle regulates the water temperature and performs a soft wash and spin phase. The appliance adds some rinses.

Programme temperature, maximum spin speed and maximum load

Programme	Default temperature Temperature range	Reference spin speed Spin speed range	Maximum load
Washing programmes			
Cottons	40 °C 95 °C - Cold	1400 rpm 1400 rpm - 400 rpm	8 kg
Cottons Eco	40 °C 60 °C - 40 °C	1400 rpm 1400 rpm - 400 rpm	8 kg

Programme	Default temperature Temperature range	Reference spin speed Spin speed range	Maximum load
Synthetics	40 °C 60 °C - Cold	1200 rpm 1200 rpm - 400 rpm	4 kg
Delicates	30 °C 40 °C - Cold	800 rpm 1200 rpm - 400 rpm	2 kg
Wool/Silk	40 °C 40 °C - Cold	1200 rpm 1200 rpm - 400 rpm	1,5 kg
Anti-allergy	60 °C	1400 rpm 1400 rpm - 400 rpm	8 kg
20min 3kg	30 °C 40 °C - 30 °C	1200 rpm 1200 rpm - 400 rpm	3 kg
Outdoor	30 °C 40 °C - Cold	1200 rpm 1200 rpm - 400 rpm	2,5 kg[1)] 1 kg[2)]
Easy Iron	40 °C 60 °C - Cold	800 rpm 800 rpm - 400 rpm	4 kg
Spin/Drain[3)]		1400 rpm 1400 rpm - 400 rpm	8 kg

1) Washing programme.

2) Washing programme and waterproofing phase.

3) Set the spin speed. Make sure it is suitable for the type of fabric being washed. If you set the No Spin option then only the drain phase is available.

Programme options compatibility

Programme	Cottons	Cottons Eco	Synthetics	Delicates	Wool/Silk	Anti-allergy	20min 3kg	Outdoor	Easy Iron	Spin/Drain
AutoDose										
AutoDose Detergent	■	■	■	■		■	■	■	■	

Programme	Cottons	Cottons Eco	Synthetics	Delicates	Wool/Silk	Anti-allergy	20min 3kg	Outdoor	Easy Iron	Spin/Drain
AutoDose Fabric Softener	■	■	■	■	■	■	■		■	
Others										
Spin	■	■	■	■	■	■	■	■	■	■
	■	■	■	■	■	■		■	■	
dB	■		■	■						
Intensive 1)	■	■	■			■			■	
Prewash	■	■	■			■			■	
Rinse only	■	■	■	■	■	■	■	■	■	
Extra Rinse	■	■	■	■		■		■	■	
Time Save 2)	■	■	■	■					■	
Delay Start	■	■	■	■	■	■	■	■	■	■

1) This option is not available with temperature lower than 40 °C.

2) If you set the shortest duration, we recommend that you decrease the load size. It is possible to fully load the appliance, however the washing results can be less satisfactory.

8.2 Woolmark Apparel Care - Blue



The wool wash cycle of this machine has been approved by The Woolmark Company for the washing of wool garments labelled as «hand wash» provided that the garments are washed according to the instructions issued by the manufacturer of this washing machine. Follow the garment care label for drying and other laundry instructions. M1512
The Woolmark symbol is a Certification mark in many countries.

9. WI-FI - CONNECTIVITY SETUP

This chapter describes how to connect the smart appliance to the Wi-Fi network and to link it to mobile devices.

By this functionality you can receive notifications, control and monitor your washing machine from your mobile devices.

To connect the appliance to enjoy the full range of features and services you need:

- Wireless network at home with internet connection enabled.
- Mobile device connected to wireless network.

Frequency	2.412 - 2.472 GHz for European market
Protocol	IEEE 802.11b/g/n two stream radio
Max Power	<20dBm

9.1 Installing and configuring "My AEG"

When connecting the washing machine to the application, stand near it with your smart device.

Make sure that your smart device is connected to the wireless network.

1. Go to the App Store on your smart device.
2. Download and install the App "My AEG" .
3. Make sure you started a Wi-fi connection in the washing machine. If not, read the next paragraph 'Configuring the washing machine wireless connection'.
4. Start the application. Select the country and language and login with Your email and password. If you do not have an account, create a new one following the instructions in "My AEG" .
5. Follow the instructions on the App for the washing machine registration and configuration.

9.2 Configuring the washing machine wireless connection

1. Press and hold the On/Off button for a few seconds to activate the appliance. Wait about 10 seconds before proceeding with wireless configuration.
2. Press and hold the and the buttons for a few seconds simultaneously until a 'click' sounds.

   Release the buttons. On appears on the display for 5 seconds and the indicator starts blinking.

The wireless module begins starting up.

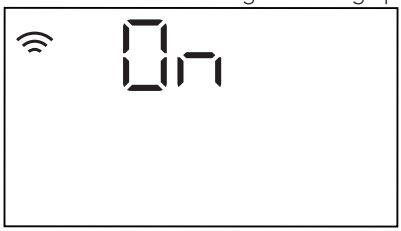

Make sure that you APP is ready for connection.

3. After about 45 seconds, AP (**Access Point**) appears on the display.

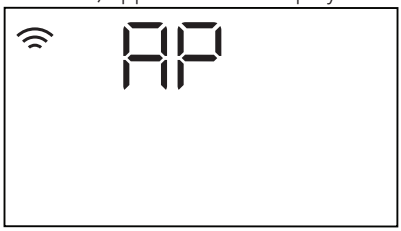

The access point will be open for about 3 minutes.

As long as the appliance is activated, it will keep trying to connect with saved credentials until the Wi-Fi is deactivated or resets the credentials.

4. Configure the "My AEG" app on your smart device and follow the instructions to connect the appliance to your Wi-Fi network.

5. If the connectivity is configured, when the programme information screen returns, the indicator is on the display.

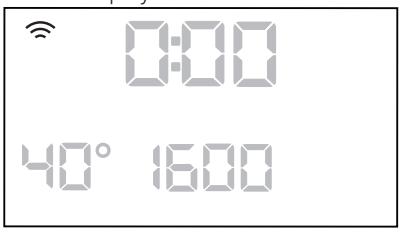

Every time you switch the appliance on, the appliance takes 45 seconds to connect to the network automatically. When the indicator stops blinking the connection is ready.

To switch the wireless connection off, press and hold the and the buttons for a few seconds simultaneously until the first acoustic signal: OFF appears on the display for 5 seconds.

If you switch the appliance off and on again, the wireless connection is automatically off.

To remove the wireless credentials, press and hold the and the buttons for at least 10 seconds simultaneously until the second acoustic signal: --- appears on the display.

9.3 Remote Start

The Remote Start enables you to start a cycle in remote control.

The Remote Control activates automatically when you press the Start/Pause button to start the programme, but it is also possible to start a washing programme remotely.

When the App is installed and the wireless connection is complete, you can activate the Remote Start:

1. Touch the Remote button and the indicator APP blinks on the display for a few seconds.



2. Touch the Start/Pause button to activate the Remote Start before the indicator APP stops blinking.

The indicators and appear on the programme summary screen and the door is locked. Now it is possible to start the programme remotely.

When touching the Start/Pause button after the indicator APP stops blinking, the Remote Start is not activated, but the set programme starts.

To remove the Remote Start, tap on the Remote button and confirm by pressing the Start/Pause button.

9.4 Over-the-air update

The App may propose an update for downloading new features.

The update is accepted via App only.

If a programme is running, the App notifies that the update will start at the end of the programme.

During the update, the appliance shows UPd in the display.

The appliance will usable again at the end of the update, without any notification about successful update.

If an error occurs, the appliance shows Err in the display: just press any buttons or turn the knob to return to normal use.

10. DAILY USE

WARNING!
Refer to Safety chapters.

10.1 Activating the appliance

1. Connect the mains plug to the mains socket.
2. Open the water tap.
3. Press the On/Off button for a few seconds to activate the appliance.

A short tune sounds (if activated). The programme dial is automatically set on Cottons programme.

The display shows the programme duration, the maximum load (for a few seconds only), the default temperature, the default spin speed and the indicators of the phases making up the programme.

10.2 Loading the laundry

1. Open the appliance door.
2. Shake the items before you put them in the appliance.
3. Put the laundry in the drum, one item at a time.

Make sure not to put too much laundry in the drum.

4. Close the door firmly.

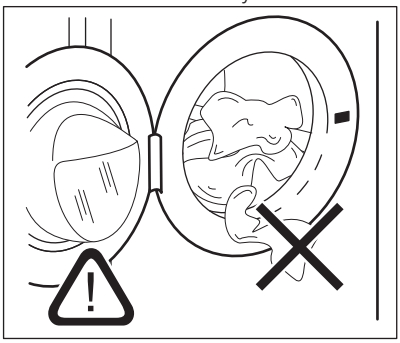

CAUTION!
Make sure that no laundry stays between the seal and the door. There is a risk of water leakage or damage to the laundry.

10.3 Setting a programme

If you wish to change the automatic detergent or fabric softener dosage, enter the AutoDose configuration mode before proceeding with any programme setting. The configuration mode may cancel temporary settings. Please refer to "AutoDose configuration mode" paragraph in "The AutoDose Technology (Autodosing)" chapter.

1. Turn the programme dial to select the desired washing programme. The related programme indicator comes on.

The indicator of the Start/Pause ▷‖ button flashes.
The display shows an indicative programme duration, the maximum declared load for the set programme (only for a few seconds), the default temperature, the default spin speed and the washing phase indicators (when available).

2. To change the temperature and/or the spin speed, touch the related buttons.
3. If desired, set one or more options by touching the related buttons. The related indicators come on in the display and the given information changes accordingly.

In case a selection is **not possible**, no indicator comes on and an acoustic signal sounds.

10.4 Starting a programme with the delay start

1. Touch the Delay Start button repeatedly until the display shows the desired delay time. The indicator goes on.
2. Touch the Start/Pause button.

The appliance starts the countdown of the delay start.
When the countdown is completed, the programme starts.

The ProSense estimation starts at the end of the countdown.

Cancelling the delay start after the countdown has started

To cancel the delay start:

1. Touch the Start/Pause button to pause the appliance. The related indicator flashes.
2. Touch the Delay Start button repeatedly until the display shows 0'.
3. Touch the Start/Pause button again to start the programme immediately.

Changing the delay start after the countdown has started

To change the delay start:

1. Touch the Start/Pause button to pause the appliance. The related indicator flashes.
2. Touch the Delay Start button repeatedly until the display shows the desired delay time.
3. Touch the Start/Pause button again to start the new countdown.

10.5 Starting a programme

WARNING!
Make sure that the detergent dispenser is firmly closed, otherwise programme won't start.

Touch the Start/Pause ▷‖ button to start the programme.
The related indicator stops flashing and stays on.
In the display, the indicator of the operating phase starts flashing.
The programme starts, the door is locked. The display shows the indicator ⊸▯.

The drain pump can operate shortly before the appliance fills water.

10.6 The ProSense load detection

The programme duration in the display is referred to a **medium/high load**.

After touching the Start/Pause ▷‖ button, the maximum declared load indicator goes off, the indicator ⫼ flashes, the ProSense starts the laundry load detection:

1. The appliance detects the load in the first 30 seconds: the indicator – – – comes on and the indicator **kg** flashes, the drum rotates shortly.
2. The appliance adjusts automatically the programme duration to the load to achieve perfect washing results in the minimum possible time. The programme duration could increase or decrease.
   At the end of the load detection, if laundry load is below the maximum declared weight for selected programme, the display shows the new programme duration. After further 30 seconds, the water filling starts.

At the end of the load detection, **in case of drum overload**, the indicator **kg** is steady on and the indicator **MAX** is flashing in the display.

In this case, for 30 seconds, it is possible to pause the appliance and remove the exceeding garments.

Once removed the exceeding garments, touch the Start/Pause ▷‖ button to start the programme again. The ProSense phase can be repeated up to three times (see point 1).

Important! If the laundry amount will not be reduced, the washing programme starts anyway, despite the overload. In this case, it will be not possible to guarantee the best washing results.

About 20 minutes after the programme start, the programme duration could be adjusted again depending on the capacity of water absorption of the fabrics.

The ProSense detection is carried out with complete washing programmes only (no skipping phase selected).

10.7 Programme phase indicators

When the programme starts the indicator of the running phase flashes and the other phase indicators are steady on.

E.g. the washing or pre wash phase is running: .

When the phase ends the relevant indicator stops flashing and is steady on. The next phase indicator starts flashing.

E.g. the rinse phase is running: .

10.8 Interrupting a programme and changing the options

When the programme is running, you can change **only some** options:

1. Touch the Start/Pause ▷‖ button.

The related indicator flashes.

2. Change the options. The given information in the display changes accordingly.
3. Touch the Start/Pause ▷‖ button again.

The washing programme continues.

10.9 Cancelling a running programme

1. Press the On/Off button to cancel the programme and to deactivate the appliance.
2. Press the On/Off button again to activate the appliance.

Now, you can set a new washing programme.

If the ProSense phase is already carried out and the water filling is already started, the new programme starts **without repeating the ProSense phase**. The water and the detergent are not drained out in order to avoid waste. The display shows the maximum duration of the programme, updating it about 20 minutes after the starting of the new programme.

10.10 Opening the door - Adding garments

While a programme or the delay start operates, the appliance door is locked.

If the temperature and level of the water in the drum are too high and/or the drum still rotates you cannot open the door.

1. Touch the button Start/Pause.

In the display the related door lock indicator goes off.

2. Open the appliance door. If necessary, add or remove the items.
3. Close the door and touch the button Start/Pause.

The programme or the delay start continues.

4. The door can be opened when the programme is complete, or set Spin/Drain programme and than press Start/Pause button.

10.11 End of the programme

When the programme has finished, the appliance stops automatically. The acoustic signals operate (if they are active).

In the display all washing phase indicators become steady and the time area shows 0.

The indicator of the Start/Pause button goes off.

The door unlocks and the indicator goes off.

1. Press the On/Off button to deactivate the appliance.

After five minutes from the end of the programme, the energy saving function automatically deactivates the appliance.

When you activate the appliance again, the display show the end of the last selected programme. Turn the programme dial to set a new cycle.

2. Remove the laundry from the appliance.
3. Make sure that the drum is empty.
4. Keep the door and the detergent dispenser slightly ajar to prevent mildew and odours.
5. Close the water tap.

10.12 Draining water out after end of cycle

If you have chosen a programme or an option that does not empty out the water of the last rinse, the programme is completed, but:

- The display shows the indicator 0, the option indicator or dB and the door locked indicator . The indicator of the running phase flashes.
- The drum still turns at regular intervals to prevent the creases in the laundry.
- The door stays locked.
- You must drain the water to open the door:

1. If necessary, touch the Spin button to decrease the spin speed proposed by the appliance.
2. Touch the Start/Pause button:
   - If you have set , the appliance drains the water and spins.
   - If you have set dB, the appliance only drains the water.

The option indicator or dB goes off, while the indicator flashes and then goes off.

3. When the programme is completed and the door locked indicator goes off, you can open the door.
4. Press the On/Off button a few seconds to deactivate the appliance.

In any case, the appliance empties the water out automatically after approximately 18 hours.

10.13 Stand-by option

The Stand-by function automatically deactivates the appliance to decrease the energy consumption when:

- You do not use the appliance for 5 minutes before you touch the Start/Pause button.
  Press the On/Off button to activate the appliance again.
- After 5 minutes from the end of the washing programme
  Press the On/Off button to activate the appliance again.
  The display shows the end of the last set programme.
  Turn the programme dial to set a new cycle.

If you set a programme or an option that ends with water in the drum, the Stand-by function **doesn't deactivate** the appliance to remind you to drain the water.

11. HINTS AND TIPS

WARNING!
Refer to Safety chapters.

11.1 The laundry load

- Divide the laundry into: white, coloured, synthetics, delicates and wool.
- Follow the washing instructions on the laundry care labels.
- Do not wash white and coloured items together.
- Some coloured items can discolour with the first wash. We recommend that you wash them separately for the first couple of times.
- Turn multilayered fabrics, wool and items with printed illustrations inside out.
- Pre-treat tough stains.
- Wash heavy soil stains with a special detergent.
- Be careful with curtains. Remove the hooks and put the curtains in a washing bag or pillowcase.
- Do not wash laundry without hems or with cuts. Use a washing bag to wash small and/or delicate items (e.g. underwired bras, belts, tights, shoelaces, ribbons, etc.).
- A very small load can cause balance problems with the spin phase leading to excessive vibration. If this occurs:
  a. interrupt the programme and open the door (refer to "Daily Use" chapter);
  b. manually redistribute the load so that the items are spaced evenly around the tub;
  c. press the Start/Pause button. The spin phase continues.
- Button up pillowcases, close zippers, hooks and poppers. Tie up belts, cords, shoelaces, ribbons and any other loose elements.
- Empty pockets and unfold the items.

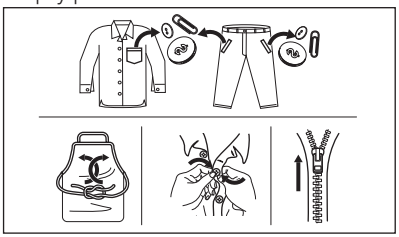

11.2 Stubborn stains

For some stains, water and detergent is not sufficient.

We recommend that you pre-treat these stains before you put the items in the appliance.

Special stain removers are available. Use the special stain remover that is applicable to the type of stain and fabric.

11.3 Detergents and other treatments

- Only use detergents and other treatments specially made for washing machines:
  – powder detergents for all types of fabric, excluding delicate. Prefer powder detergents containing bleach for whites and laundry sanitization
  – liquid detergents, preferably for low temperature wash programmes (60 °C max) for all types of fabric, or special ones for woollens only.
- Do not mix different types of detergents.
- To help the environment, do not use more than the recommended quantity of detergent.
- Follow the instructions that you find on packaging of the detergents or other treatments without exceeding the indicated maximum level (**MAX**).
- Use the recommended detergents for the type and colour of the fabric, the programme temperature and the level of soil.

11.4 Ecological hints

- Set a programme without the prewash phase to wash laundry with normal soil.
- Always start a washing programme with the maximum load of laundry allowed.
- If you pre-treat the stains or use a stain remover, set a programme with a low temperature.
- To use the correct quantity of detergent, check the water hardness

of your domestic system. Refer to "Water hardness".

11.5 Water hardness

If the water hardness in your area is high or moderate, we recommend that you additive for water softening. In areas where the water hardness is soft it is not necessary to use him.

To find out the water hardness in your area, contact your local water authority.

Use the correct quantity of additive for water softening. Follow the instructions that you find on the packaging of the product.

12. CARE AND CLEANING

WARNING!
Refer to Safety chapters.

12.1 External cleaning

Clean the appliance with mild soap and warm water only. Fully dry all the surfaces.

CAUTION!
Do not use alcohol, solvents or chemical products.

CAUTION!
Do not clean the metal surfaces with chlorine-based detergent.

12.2 Descaling

If the water hardness in your area is high or moderate, we recommend that you use a water descaling product for washing machines.

Regularly examine the drum to check for limescale.

The regular detergents already contain water softening agents, but we recommend to run a cycle with empty drum and a descaling product occasionally.

Always follow the instructions that you find on the packaging of the product.

12.3 Maintenance wash

The repeated and prolonged use of low temperature and short programmes can cause detergent deposits, fluff residues, bacterial growth and biofilm formation inside the drum and the tub. This could generate bad odours and mildew.

To eliminate these deposits and hygienize the inner part of the appliance, run a maintenance wash at least once a month:

1. Remove all laundry from the drum.
2. Deactivate AutoDose function for detergent and softener.
3. Add manually small quantity of powder detergent or a specific product and run a cotton programme with the highest temperature.

12.4 Door seal

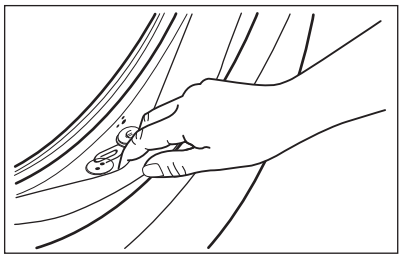

Regularly examine the seal and remove all objects from the inner part.

12.5 Cleaning the drum

Regularly examine the drum to prevent unwanted deposits.

Rust deposits in the drum may occur due to rusting foreign body in the washing or tap water containing iron

Clean the drum with special products for stainless steel.

Always follow the instructions that you find on the packaging of the product.
Do not clean the drum with acidic descaling products, scouring products containing chlorine or iron or steel wool.

For a thorough clean:

1. Remove all laundry from the drum.
2. Deactivate AutoDose function for detergent and softener.
3. Run a Cottons programme with the highest temperature.
4. Add a manually small quantity of powder detergent or a specific product into the empty drum, in order to rinse out any left residues.

Occasionally, at the end of a cycle the display may show the icon : this is a recommendation to perform the “drum cleaning”. Once the drum cleaning has been performed, the icon disappears.

12.6 Cleaning the detergent dispenser and the AutoDose tanks

CAUTION!
Do not change brand or type of detergent, fabric softener or additives inside the tanks without cleaning both tanks before.

Before cleaning, make sure that the all compartments are empty.

To prevent possible deposits of dried detergent, clotted fabric softener, formation of mould in the detergent dispenser and/or clotted liquid additives in the AutoDose tanks, **once in a while carry out the following cleaning procedure**:

1. Open the detergent dispenser. Press the catch as indicated in the picture and pull the detergent dispenser out.

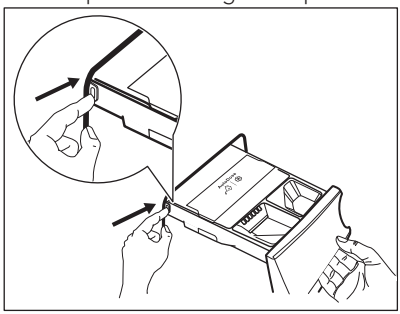

2. Remove the insert for the softener and, if inserted, the container for liquid detergent.

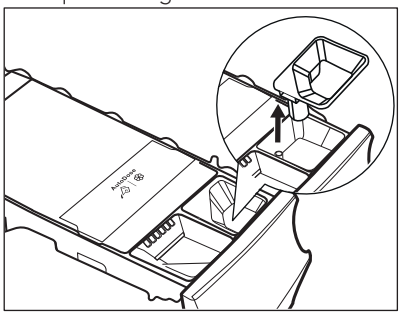

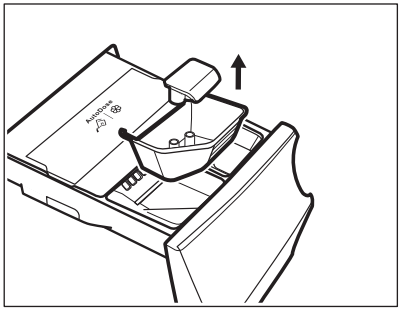

3. Open the drain plugs of each tank and empty them into a sink.

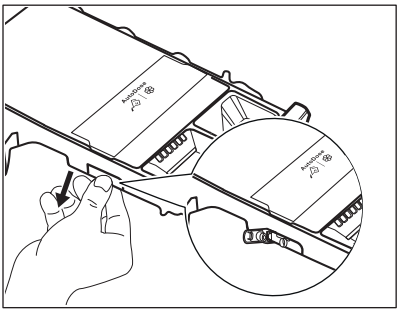

4. Press the catch on the back as indicated in the picture and lift up the top cover to remove it.

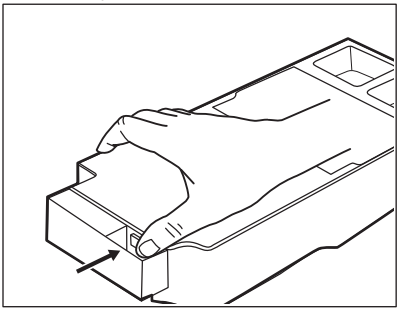

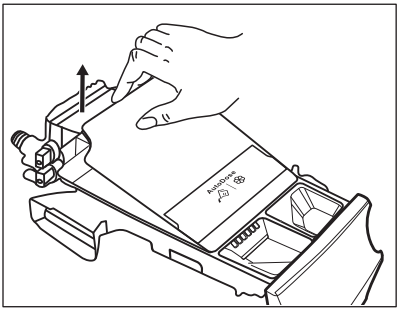

5. Wash the drawer and all inserts under running water.

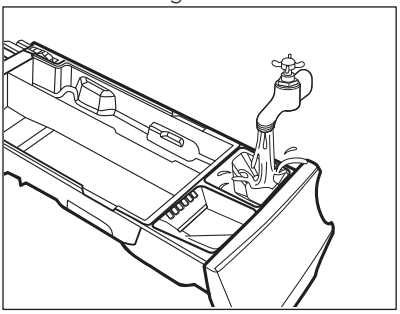

CAUTION!
Do not use sharp or metal brushes and sponges.

6. Turn the dispenser up side down and open the bottom cover as indicated in the picture.

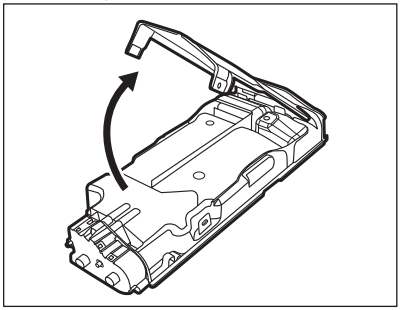

7. Make sure that all detergent residue is removed from the conveyor. Use only soft damp clothes.
8. Put bottom cover back to its position by aligning its holes on drawer hooks as indicated in the picture. Close it till "click" sound.

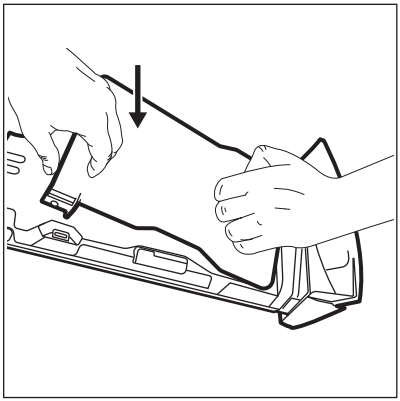

CAUTION!
Press the bottom cover as indicated in the picture. Make sure that it is closed properly.

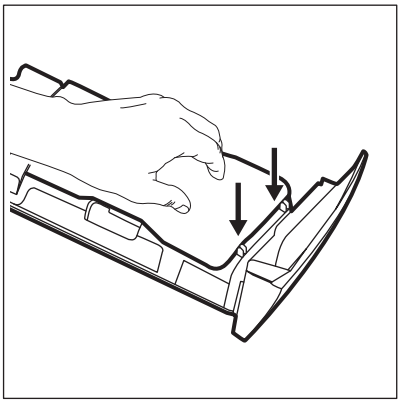

WARNING!
Do not clean with any sharp and metal brushes ora any tools, pumps or sensors allocated on the back of the detergent drawer. If necessary, use only soft damp clothes.

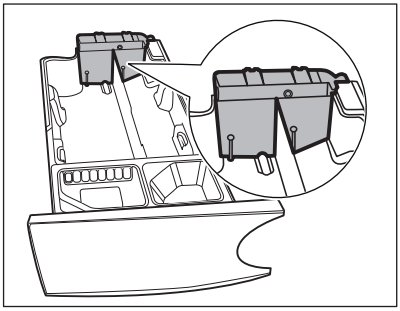

WARNING!
If some residues remain on the back area of tanks, soak detergent drawer in a warm water. Do not use tools to clean it. Before soaking, remove the handle by pressing red button and slide the handle as indicated in the picture.

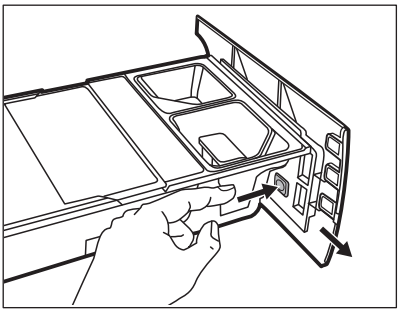

9. Make sure that all detergent residue is removed from the upper and lower part of the recess. Use a small brush to clean the recess.

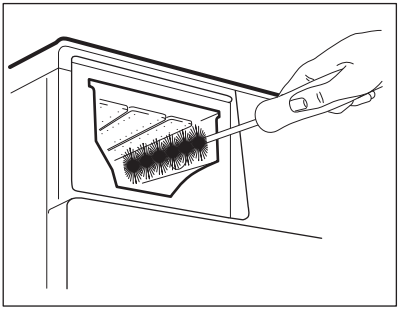

10. Reassembly the drawer as follows:
    a. Place the handle if was disassembled.
    b. Place the bottom cover and press till "click" sound.
    c. Place the top cover on the tanks compartment and press till "click" sound.
    d. Replace components on manual compartment.
11. Insert the detergent dispenser into the guide rails and gently close it till "click" sound. Run the rinsing programme without any clothes in the drum.

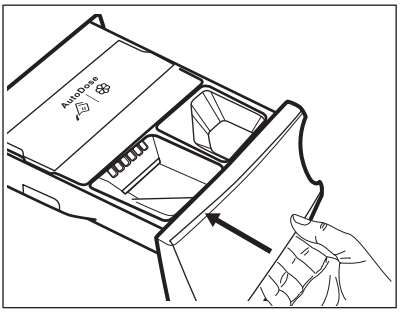

To restore the functionality, refill tanks with detergent and softener. If you place a wrong additives in the tanks, you can easily recover it by using the drain plug on both side of the drawer. Before opening drain plugs ensure to place below the drawer a basin or suitable containers to collect the liquid. Ensure to properly close the plugs before refilling.

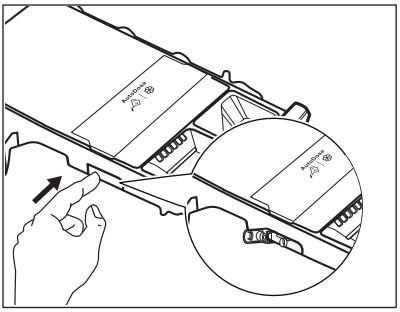

12.7 Cleaning the drain pump

WARNING!
Disconnect the mains plug from the mains socket.

Regularly check the drain pump filter and make sure that it is clean.

Clean the drain pump if:
- The appliance does not drain the water.
- The drum does not turn.
- The appliance makes an unusual noise because of the blockage of the drain pump.
- The display shows the alarm code E21.

WARNING!
- Do not remove the filter while the appliance operates.
- Do not clean the pump if the water in the appliance is hot. Wait until the water cools down

Proceed as follows to clean the pump:

1. Open the pump cover.

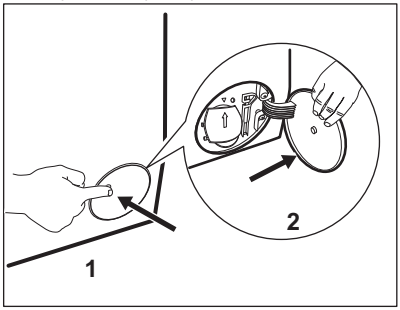

2. Place a suitable bowl below the drain pump access to collect the water that flows out.
3. Open the chute downwards. Always keep a rag nearby to dry up any water spillages when removing the filter.

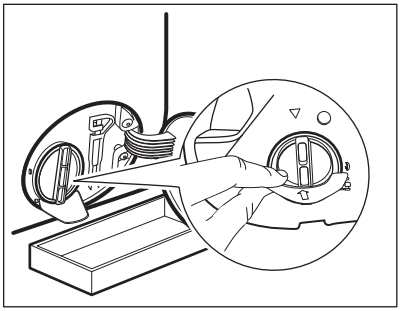

4. Turn the filter 180 degrees in anti-clockwise direction to open it, without removing. Let the water flow out.

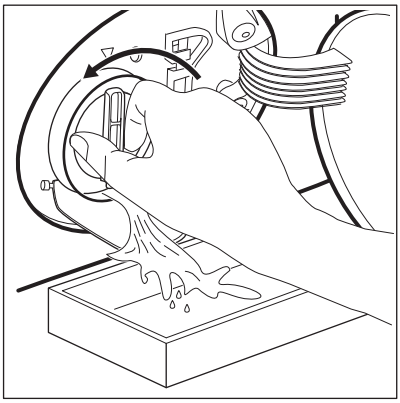

5. When the bowl is full of water, turn the filter back and empty the container.
6. Repeat the steps 4 and 5 until the water stops to flow out.
7. Turn the filter anti-clockwise to remove it.

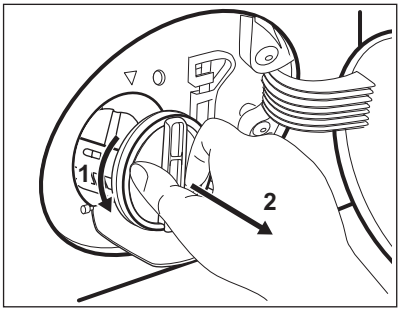

8. If it is necessary, remove fluff and objects from the filter recess.
9. Make sure that the impeller of the pump can rotate. If it does not rotate, contact the Authorised Service Centre.

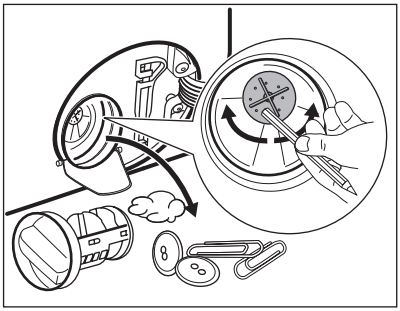

10. Clean the filter under the water tap.

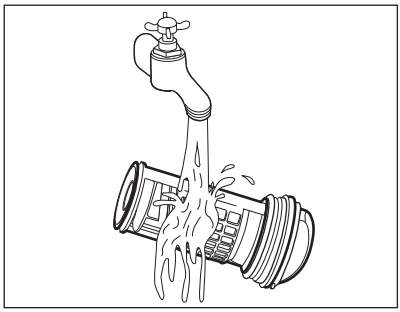

11. Put the filter back into the special guides by turning it clockwise. Make sure that you tighten the filter correctly to prevent leakages.

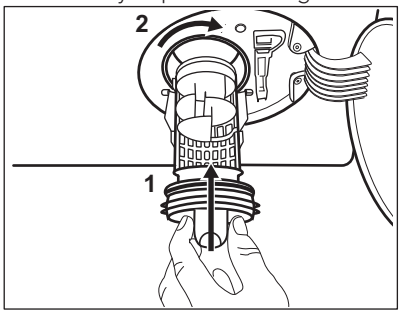

12. Close the pump cover.

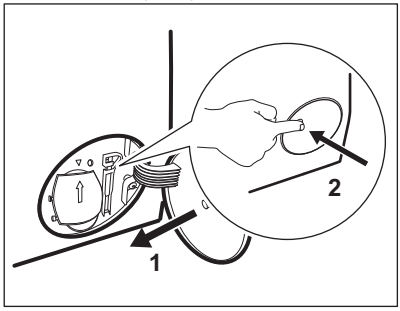

When you drain the water with the emergency drain procedure, you must activate the drain system again:

a. Put 2 litres of water in the main wash compartment of the detergent dispenser.
b. Start the programme to drain the water.

12.8 Cleaning the inlet hose and the valve filter

It is recommended to clean both the filters of the inlet hose and valve occasionally to remove any deposit, collected over the time:

1. Remove the inlet hose from the tap and clean the filter.

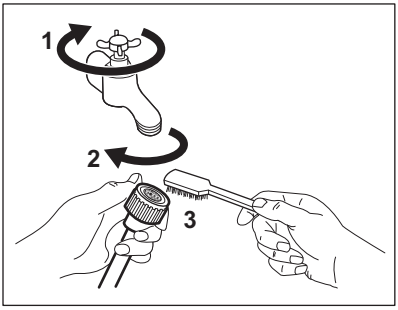

2. Remove the inlet hose from the appliance by loosening the ring nut.

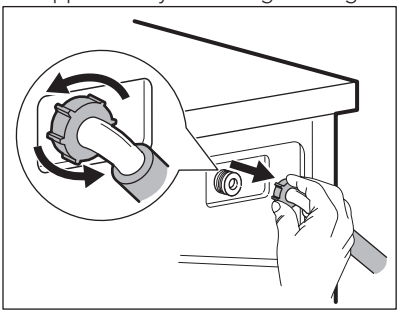

3. Clean the valve filter on the back of the appliance with a toothbrush.

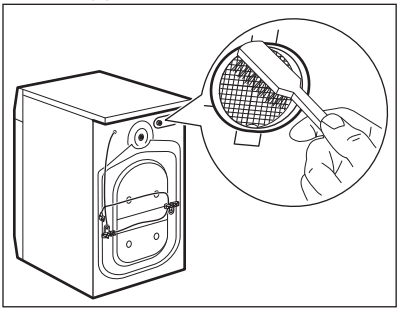

4. When you reconnect the hose to the back of the appliance, turn it left or right (not in vertical position) depending on the position of your water tap.

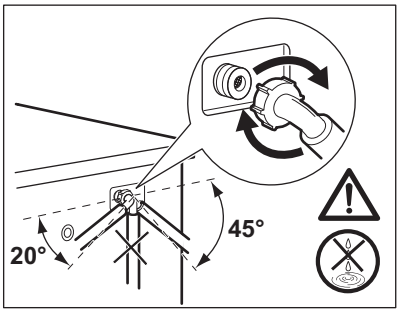

12.9 Emergency drain

If the appliance cannot drain the water, carry out the same procedure, described in 'Cleaning the drain pump' paragraph. If necessary, clean the pump.

When you drain the water with the emergency drain procedure, you must activate the drain system again:

1. Put 2 litres of water in the main wash compartment of the detergent dispenser.
2. Start the programme to drain the water.

12.10 Frost precautions

If the appliance is installed in an area where the temperature can reach the values around 0° C or drop below, remove the remaining water from the inlet hose and the drain pump.

1. Disconnect the mains plug from the mains socket.
2. Close the water tap.
3. Put the two ends of the inlet hose in a container and let the water flow out of the hose.
4. Empty the drain pump. Refer to the emergency drain procedure.
5. When the drain pump is empty, install the inlet hose again.

WARNING!
Make sure that the temperature is higher than 0 °C before you use the appliance again.
The manufacturer is not responsible for damages caused by low temperatures.

13. TROUBLESHOOTING

WARNING!
Refer to Safety chapters.

13.1 Introduction

The appliance does not start or it stops during operation.

First try to find a solution to the problem (refer to the table). If the problem persists, contact the Authorised Service Centre.

In case of major problems, the acoustic signals operate, the display shows an alarm code and the Start/Pause ▷‖ button may flash continuously:

- E11 - The appliance does not fill with water properly.
  Start the appliance again by pressing Start/Pause ▷‖ button. After 5 seconds the door will be unlocked.
- E21 - The appliance does not drain the water.
- E41 - The appliance door is open or not closed correctly. Please check the door!

If the appliance is overloaded, remove some items from the drum and/or keep pressed the door while touching the Start/Pause ▷‖ button until the indicator 🔒 stops flashing (see the picture below).

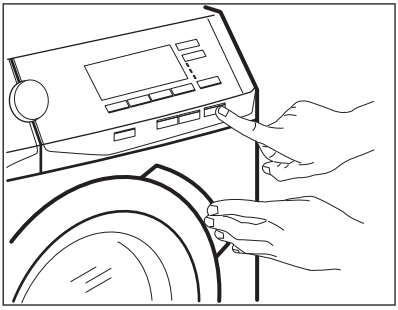

- EH1 - Frequency of power supply out of range.
- EH2 - Supply voltage too high.
- EH3 - Supply voltage too low.
- E9i - Internal fail. Switch the appliance off and switch it on again. The programme was not finished properly or the appliance stopped too early. If the alarm code appears again, contact the Authorized Service Center and communicate it.
- EF3 - The anti-flood device is on. Disconnect the appliance and close the water tap. Contact the Authorised Service Centre.

WARNING!
Deactivate the appliance before carrying out any check.

13.2 Possible failures

Problem	Possible solution
The programme does not start.	• Make sure that the mains plug is connected to the mains socket. • Make sure that the appliance door is closed. • Make sure that there is no damaged fuse in the fuse box. • Make sure that the Start/Pause ▷‖ has been touched. • Make sure that the detergent dispenser is firmly closed. • If the delay start is set, cancel the setting or wait for the end of countdown. • Deactivate the Child Lock function if it is on.
The appliance does not fill with water properly.	• Make sure that the water tap is open. • Make sure that the pressure of the water supply is not too low. For this information, contact your local water authority. • Make sure that the water tap is not clogged. • Make sure that the inlet hose has no kinks, damages or bends. • Make sure that the connection of the water inlet hose is correct. • Make sure that the filter of the inlet hose and the filter of the valve are not clogged. Refer to "Care and cleaning".
The appliance fills with water and drains immediately	• Make sure that the drain hose is in the correct position. The hose may be positioned too low. Refer to "Installation instruction".
The appliance does not drain the water.	• Make sure that the sink spigot is not clogged. • Make sure that the drain hose has no kinks or bends. • Make sure that the drain filter is not clogged. Clean the filter, if necessary. Refer to "Care and cleaning". • Make sure that the connection of the drain hose is correct. • Set the drain programme if you set a programme without drain phase. • Set the drain programme if you set an option which ends with water in the tub.
The spin phase does not operate or the washing cycle lasts longer than usual.	• Set the spin programme. • Make sure that the drain filter is not clogged. Clean the filter, if necessary. Refer to "Care and cleaning". • Adjust manually the items in the tub and start the spin phase again. This problem may be caused by balance problems.
There is water on the floor.	• Make sure that the couplings of the water hoses are tight and there is not water leakages. • Make sure that the water inlet hose and the drain hose have no damages. • Make sure you use the correct detergent and the correct quantity of it.

Problem	Possible solution
You cannot open the appliance door.	• Make sure that a washing programme that ends with water in tub, has been selected. • Make sure that the washing programme is finished. • Set the drain or the spin programme if there is water in the drum. • Make sure that the appliance receives electrical power. • This problem may be caused by a failure of the appliance. Contact the Authorised Service Centre. • Make sure that the x is not activated. Deactivate it.
The display does not show the wireless indicator .	• Check the wireless signal. • Make sure that the wireless connection is on. • Check your home network and router. • Restart the router. • Contact your wireless service provider if there are further problems with the wireless network.
The App cannot connect to the appliance.	• Check the wireless signal. • Check if your smart device is connected to the wireless network. • Check your home network and router. • Restart the router. • Contact your wireless service provider if there are problems with the wireless network. • The appliance, the smart device, or both, need to be configured again because a new router has been installed or the router configuration has been changed.
The App cannot frequently connect to the appliance.	• Make sure that the wireless signal reaches the appliance. Try to move the home router as near the appliance as possible or consider purchasing a wireless range extender. • Make sure the wireless signal is not disrupted by microwave. Turn the microwave off. Avoid using the microwave and the remote control at the same time.
The appliance makes an unusual noise and vibrates.	• Make sure the levelling of the appliance is correct. Refer to "Installation instruction". • Make sure that the packaging and/or the transit bolts are removed. Refer to "Installation instruction". • Add more laundry in the drum. The load may be too small.
The programme duration increases or decreases during programme execution.	• The ProSense function is able to adjust the programme duration according to the type and the laundry load size. Refer to "The ProSense load detection" in "Daily Use" chapter.

Problem	Possible solution
The washing results are not satisfactory.	• Increase the detergent quantity or use a different detergent. • Use special products to remove the stubborn stains before you wash the laundry. • Make sure that you set the correct temperature. • Decrease the laundry load. • When using AutoDose tanks, make sure that they are not empty. • When using AutoDose tanks, verify the pre-set detergent/ fabric softener dose. Refer to "AutoDose basic setting" paragraph in "The AutoDose Technology (Autodosing)" chapter. • Make sure that you have cleaned the AutoDose tanks before using different brand and type of detergent, fabric softener or other additives.
Too much foam in the drum during the washing cycle.	• Reduce the quantity of detergent. • When using AutoDose tanks, verify the pre-set detergent/ fabric softener dosage. Refer to "AutoDose basic setting" paragraph in "The AutoDose Technology (Autodosing)" chapter.
The detergent/fabric softener level does not decrease in the AutoDose tanks after washing.	• This is normal: tanks are quite large and detergent consumption may be not so evident.

After the check, activate the appliance. The programme continues from the point of interruption.
If the problem occurs again, contact the Authorised Service Centre.
If the display shows other alarm codes. Deactivate and activate the appliance. If the problem continues, contact the Authorised Service Centre.

14. CONSUMPTION VALUES

Stated values are obtained in laboratory conditions with relevant standards. Different causes can change the data: the quantity and type of laundry and ambient temperature. Water pressure, the supply voltage and the temperature of inlet water may also affect the washing programme duration.

Technical specifications may be changed without prior notice to improve the quality of product.

During the washing programme, the Prosense technology can vary the wash duration and the consumption values. For more details see 'The Prosense load detection' paragraph in 'Daily Use' chapter.

Programmes	Load (kg)	Energy consumption (kWh)	Water consumption (litre)	Approximate programme duration (minutes)	Remaining moisture (%)[1]
Cottons 60°C	8	1,89	88	230	52
Cottons 40°C	8	1,20	88	215	52
Synthetics 40°C	4	0,78	59	135	35
Delicates 40°C	2	0,47	47	55	35
Wool/Silk 30°C	1,5	0,26	67	75	30
Standard cotton programmes					
Standard 60°C cotton	8	0,77	50	275	52
Standard 60°C cotton	4,5	0,49	36	250	52
Standard 40°C cotton	4,5	0,49	36	250	52

[1] At the end of spin phase.

Off Mode (W)	0.30
Left On Mode (W)	0.30
Power consumption in networked standby (W)	2.00
Time to networked standby (min.)	15

The information given in the chart above is compliant with the EU Commission regulation 1015/2010 implementing directive 2009/125/EC and EU commission regulation No. 1275/2008.

15. TECHNICAL DATA

Dimension	Width/ Height/ Depth/ Total depth	600 mm/ 850 mm/ 630 mm/ 660 mm
Electrical connection	Voltage Overall power Fuse Frequency	230-240 V 2200 W 13 A 50 Hz
Level of protection against ingress of solid particles and moisture ensured by the protective cover, except where the low voltage equipment has no protection against moisture		IPX4

Water supply pressure	Minimum Maximum	0.5 bar (0.05 MPa) 8 bar (0.8 MPa)
Water supply [1]		Cold water
Maximum Load	Cotton	8 kg
Energy Efficiency Class		A+++
Spin Speed	Maximum spin speed	1351 rpm

[1] Connect the water inlet hose to a water tap with a 3/4'' thread.

16. ACCESSORIES

16.1 Available in www.aeg.com/shop or from authorised dealer

Only appropriate accessories approved by AEG ensure the safety standards of the appliance. If unapproved parts are used, any claims will be invalidated.

16.2 Fixing plate kit

If you install the appliance on a plinth, secure the appliance with the fixing plates.

Read carefully the instructions supplied with the accessory.

16.3 Stacking kit

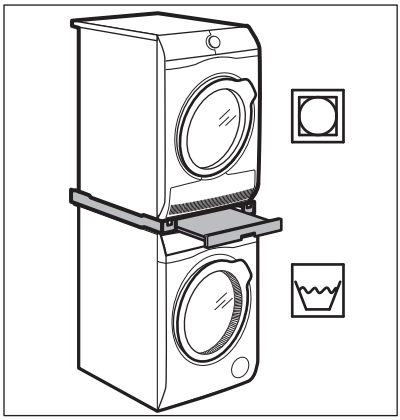

The tumble dryer can be stacked on the top of the washing machine **only by using the correct stacking kit manufactured and approved by AEG**.

Verify the compatible stacking kit by checking the depth of your appliances.

The stacking kit can be used only with the appliances specified in the leaflet provided with the accessory.

Read carefully the instructions supplied with the appliance and with the accessory.

WARNING!
Do not put the tumble dryer under the washing machine.

17. QUICK GUIDE

17.1 Daily use

Connect the mains plug to the mains socket.

Open the water tap.

Load the laundry.

Pour the detergent and other treatment in the proper compartment of the detergent dispenser.

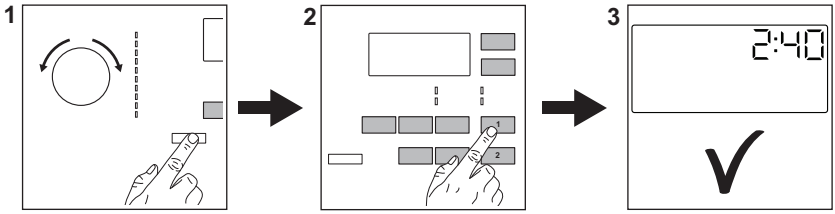

1. Push the **On/Off** button to turn the appliance on. Turn the programme dial to set the desired programme.
2. Set the desired options (1) by means of the corresponding touch buttons. To start the programme, touch the **Start/Pause** ▷‖ (2) button.
3. The appliance starts. At the end of the programme, remove the laundry.

   Push the **On/Off** button to turn the appliance off.

17.2 Cleaning the drain pump filter

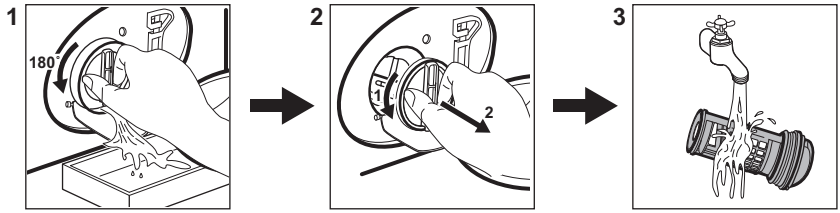

Clean the filter regularly and, especially, if the alarm code E21 appears on the display.

17.3 Programmes

Programmes	Load	Product description
Cottons	8 kg	White cotton and coloured cotton.
Cottons Eco	8 kg	White cotton and coloured cotton. Standard programmes for the Energy Label consumption values.

Programmes	Load	Product description
Synthetics	4 kg	Synthetic items or mixed fabric items.
Delicates	2 kg	Delicate fabrics such as acrylics, viscose, polyester items.
Wool/Silk	1,5 kg	Machine washable wool, hand washable wool and delicates.
Anti-allergy	8 kg	White cotton items. This programme helps to remove germs and bacteria.
20min 3kg	3 kg	Cotton and synthetic lightly soiled or once worn items.
Outdoor	2,5 kg [1)] 1 kg [2)]	Modern outdoor sporting garments.
Easy Iron	4 kg	Synthetic items requiring a gentle wash.
Spin/Drain	8 kg	All fabrics, except woollens and very delicate fabrics. Programme for spinning and draining the water.

[1)] Washing programme.

[2)] Washing programme and waterproofing phase.

18. PRODUCT INFORMATION SHEET IN REFERENCE TO E.U. REGULATION 1369/2017

Product Information Sheet	
Trade Mark	AEG
Model	L6FBG841CA, PNC914915105
Rated capacity in kg	8
Energy efficiency class	A+++
Energy consumption in kWh per year, based on 220 standard washing cycles for cotton programmes at 60 °C and 40 °C at full and partial load, and the consumption of the low-power modes. Actual energy consumption will depend on how the appliance is used.	137,0
Energy consumption of the standard 60°C cotton programme at full load in kWh	0,77
Energy consumption of the standard 60°C cotton programme at partial load in kWh	0,49

Energy consumption of the standard 40°C cotton programme at partial load kWh	0,49
Power consumption of the off-mode in W	0,30
Power consumption in left-on mode in W	0,30
Water consumption in litres per year, based on 220 standard washing cycles for cotton programmes at 60 °C and 40 °C at full and partial load. Actual water consumption will depend on how the appliance is used.	10000
Spin-drying efficiency class on a scale from G (least efficient) to A (most efficient)	B
Maximum spin speed in rpm	1351
Remaining moisture content in %	52
The 'standard 60 °C cotton programme' and the 'standard 40 °C cotton programme' are the standard washing programmes to which the information in the label and the fiche relates, these programmes are suitable to clean normally soiled cotton laundry and they are the most efficient in terms of combined energy and water consumption.	-
Programme time of the standard 60°C cotton programme at full load in minutes	275
Programme time of the standard 60°C cotton programme at partial load in minutes	250
Programme time of the "standard 40°C cotton programme at partial load in minutes	250
Duration of the left on mode in minutes	5
Airborne acoustical noise emission in db(A) washing	51
Airborne acoustical noise emission in db(A) spinning	75
Built in appliance Y/N	No

The information given in the chart above is compliant with the EU Commission regulation 1015/2010 implementing directive 2009/125/EC .

19. ENVIRONMENTAL CONCERNS

Recycle materials with the symbol . Put the packaging in relevant containers to recycle it. Help protect the environment and human health by recycling waste of electrical and electronic appliances. Do not dispose of appliances marked with the symbol with the household waste. Return the product to your local recycling facility or contact your municipal office.

www.aeg.com/shop



192924512-A-362019

CE

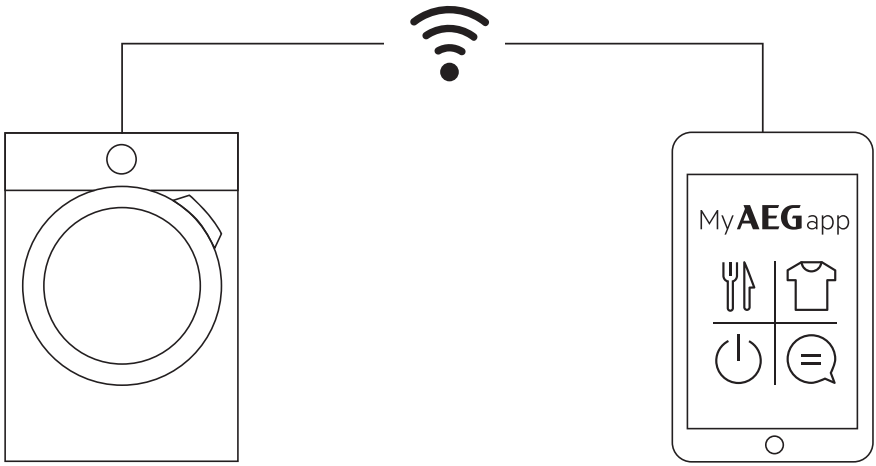



aeg.com/app

vailable on the App Store

GET IT ON Google Play

The software included in this product contains copyrighted software that is licensed under the BSD, GPL-2.0, LGPL-2.0, LGPL-2.1, zLib, MIT, ISC, Apache 2.0 and others. It is possible to display the complete copy of the licenses in the AEG App that can be downloaded from the corresponding App store from the License menu section. It is possible to download the source code of the open source software used in the product by searching for Wi-Fi Module Software version in NIUX subfolder at the following website: **http://aeg.opensoftwarerepository.com**.

AEG