L9FEA966C

EN **User Manual**
Washing Machine

USER MANUAL

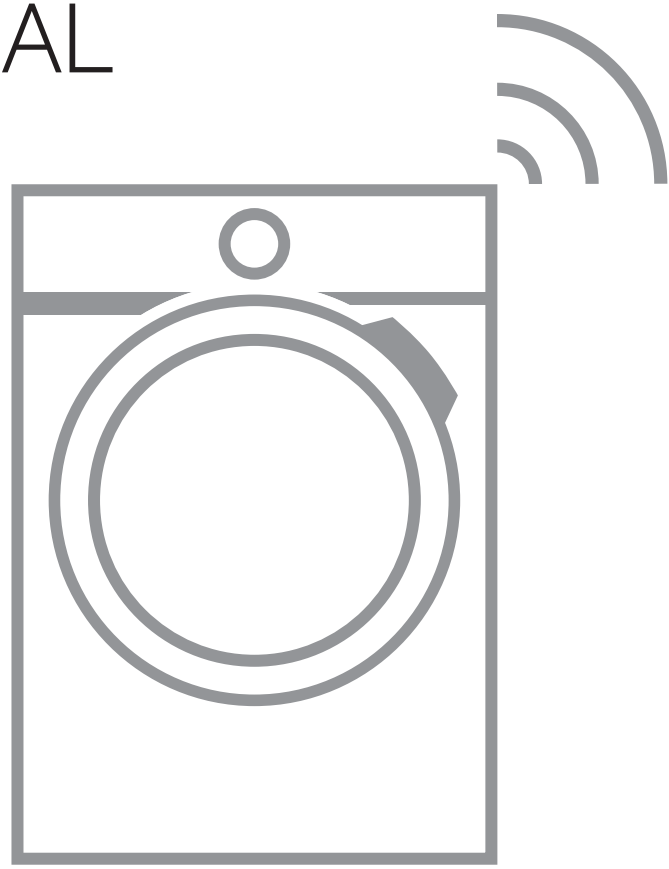

AEG

CONTENTS

1. SAFETY INFORMATION....3
2. SAFETY INSTRUCTIONS....5
3. INSTALLATION....7
4. PRODUCT DESCRIPTION....11
5. THE WATER SOFTENER (SOFT WATER)....13
6. CONTROL PANEL....17
7. FIRST TIME START-UP....17
8. TOUCH SCREEN....19
9. WI-FI CONNECTIVITY SETUP....21
10. BEFORE FIRST USE....23
11. PROGRAMMES....23
12. OPTIONS....29
13. DAILY USE....33
14. SETTINGS....38
15. HINTS AND TIPS....41
16. CARE AND CLEANING....43
17. TROUBLESHOOTING....48
18. CONSUMPTION VALUES....52
19. TECHNICAL DATA....53
20. ACCESSORIES....54
21. PRODUCT INFORMATION SHEET IN REFERENCE TO E.U. REGULATION 1369/2017....55



FOR PERFECT RESULTS

Thank you for choosing this AEG product. We have created it to give you impeccable performance for many years, with innovative technologies that help make life simpler - features you might not find on ordinary appliances. Please spend a few minutes reading to get the very best from it.
Visit our website for:



Get usage advice, brochures, trouble shooter, service information:
www.aeg.com/webselfservice



Register your product for better service:
www.registeraeg.com



Buy Accessories, Consumables and Original spare parts for your appliance:
www.aeg.com/shop

CUSTOMER CARE AND SERVICE

Always use original spare parts.
When contacting our Authorised Service Centre, ensure that you have the following data available: Model, PNC, Serial Number.
The information can be found on the rating plate.

⚠ Warning / Caution-Safety information

ⓘ General information and tips

Environmental information

Subject to change without notice.

1. ⚠ SAFETY INFORMATION

Before the installation and use of the appliance, carefully read the supplied instructions. The manufacturer is not responsible for any injuries or damage that are the result of incorrect installation or usage. Always keep the instructions in a safe and accessible location for future reference.

1.1 Children and vulnerable people safety

- This appliance can be used by children aged from 8 years and above and persons with reduced physical, sensory or mental capabilities or lack of experience and knowledge if they have been given supervision or instruction concerning the use of the appliance in a safe way and understand the hazards involved.

- Children between 3 and 8 years of age and persons with very extensive and complex disabilities shall be kept away from the appliance unless continuously supervised.
- Children of less than 3 years of age should be kept away from the appliance unless continuously supervised.
- Do not let children play with the appliance.
- Keep all packaging away from children and dispose of it appropriately.
- Keep detergents away from children.
- Keep children and pets away from the appliance when the door is open.
- Children shall not carry out cleaning and user maintenance of the appliance without supervision.

1.2 General Safety

- Do not change the specification of this appliance.
- This appliance is intended to be used in household and similar applications such as:
  - staff kitchen areas in shops, offices and other working environments;
  - by clients in hotels, motels, bed & breakfast and other residential type environments;
  - areas for communal use in blocks of flats or in launderettes.
- Do not exceed the maximum load of 9 kg (refer to the "Programme chart" chapter).
- The operating water pressure at the water entry point from the outlet connection must be between 0.5 bar (0.05 MPa) and 8 bar (0.8 MPa).
- The ventilation opening in the base must not be covered by a carpet, mat, or any floor covering.
- The appliance must be connected to the water mains using the new supplied hose sets, or other new hose sets supplied by the Authorised Service Centre.
- Old hose sets must not be reused.

- If the mains power supply cable is damaged, it must be replaced by the manufacturer, its Authorised Service Centre or similarly qualified persons to avoid an electrical hazard.
- Before any maintenance operation, deactivate the appliance and disconnect the mains plug from the socket.
- Do not use high pressure water sprays and/or steam to clean the appliance.
- Clean the appliance with a moist cloth. Use only neutral detergents. Do not use abrasive products, abrasive cleaning pads, solvents or metal objects.

2. SAFETY INSTRUCTIONS

2.1 Installation

The installation must comply with relevant national regulations.

- Remove all the packaging and the transit bolts including rubber bush with plastic spacer.
- Keep the transit bolts in a safe place. If the appliance is to be moved in the future they must be reattached to lock the drum to prevent an internal damage.
- Always take care when moving the appliance as it is heavy. Always use safety gloves and enclosed footwear.
- Follow the installation instructions supplied with the appliance.
- Do not install or use a damaged appliance.
- Do not install or use the appliance where the temperature can be less than 0°C or where it is exposed to the weather.
- The floor area on which the appliance is to be installed must be flat, stable, heat resistant and clean.
- Make sure that there is air circulation between the appliance and the floor.
- When the appliance is in its permanent position, check if it is levelled correctly with the aid of a spirit level. If it is not, adjust the feet accordingly.
- Do not install the appliance directly above a floor drain.
- Do not spray water on the appliance and do not expose it to excessive humidity.
- Do not install the appliance where the appliance door cannot be fully opened.
- Do not put a closed container to collect possible water leakage under the appliance. Contact the Authorised Service Centre to ensure which accessories can be used.

2.2 Electrical connection

WARNING!
Risk of fire and electric shock.

- The appliance must be earthed.
- Always use a correctly installed shockproof socket.
- Make sure that the parameters on the rating plate are compatible with the electrical ratings of the mains power supply.
- Do not use multi-plug adapters and extension cables.
- Make sure not to cause damage to the mains plug and to the mains cable. Should the mains cable need to be replaced, this must be carried out by our Authorised Service Centre.

- Connect the mains plug to the mains socket only at the end of the installation. Make sure that there is access to the mains plug after the installation.
- Do not touch the mains cable or the mains plug with wet hands.
- Do not pull the mains cable to disconnect the appliance. Always pull the mains plug.
- This appliance is fitted with a 13 A mains plug. If it is necessary to change the mains plug fuse, use only a 13 A ASTA (BS 1362) fuse (UK and Ireland only).

2.3 Water connection

- Do not cause damage to the water hoses.
- Before connection to new pipes, pipes not used for a long time, where repair work has been carried out or new devices fitted (water meters, etc.), let the water flow until it is clean and clear.
- Ensure that there are no visible water leaks during and after the first use of the appliance.
- Do not use an extension hose if the inlet hose is too short. Contact the Authorised Service Centre for the replacement of the inlet hose.
- When unpacking the appliance, It is possible to see water flowing from the drain hose. This is due to the testing of the appliance with the use of water in the factory.
- You can extend the drain hose to maximum 400 cm. Contact the Authorised Service Centre for the other drain hose and the extension.
- Make sure that there is access to the tap after the installation.

2.4 Use



WARNING!
Risk of injury, electric shock, fire, burns or damage to the appliance.

- Follow the safety instructions on the detergent packaging.
- Do not put flammable products or items that are wet with flammable products in, near or on the appliance.
- Do not wash fabrics which are heavily soiled with oil, grease or other greasy substances. It can damage rubber parts of the washing machine. Prewash such fabrics by hand before loading them into the washing machine.
- Do not touch the glass door while a programme operates. The glass can get hot.
- Make sure that all metal objects are removed from the laundry.

2.5 Service

- To repair the appliance contact the Authorised Service Centre.
- Use original spare parts only.

2.6 Disposal



WARNING!
Risk of injury or suffocation.

- Disconnect the appliance from the mains electrical and water supplies.
- Cut off the mains electrical cable close to the appliance and dispose of it.
- Remove the door catch to prevent children or pets from becoming trapped in the drum.
- Dispose of the appliance in accordance with local requirements for the disposal of Waste Electrical and Electronic Equipment (WEEE).

3. INSTALLATION

WARNING!
Refer to Safety chapters.

3.1 Unpacking

WARNING!
Remove all the packaging and the transit bolts before installing the appliance.

WARNING!
Use the gloves.

1. Remove the external film. If necessary, use a cutter.

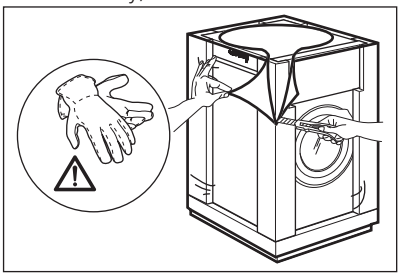

2. Remove the cardboard top and the polystyrene packaging materials.

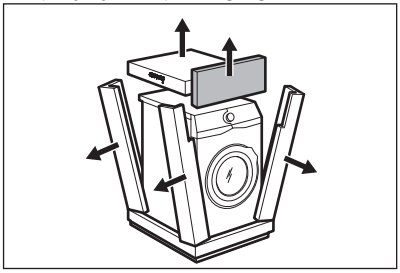

3. Remove the internal film.

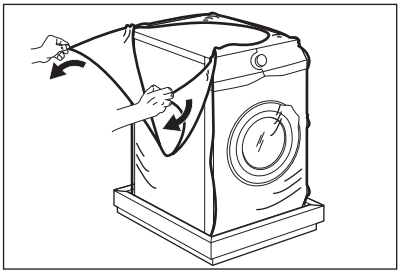

4. Open the door and remove the polystyrene piece from the door seal and all the items from the drum.

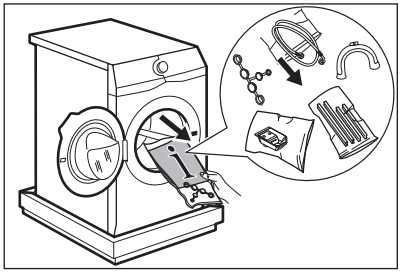

5. Carefully put the appliance down on its rear side.
6. Put the front polystyrene packaging element on the floor under the appliance.

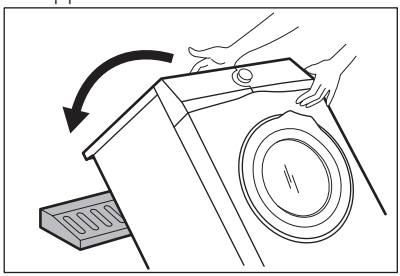

Make sure not to damage the hoses.

7. Remove the polystyrene protection from the bottom.

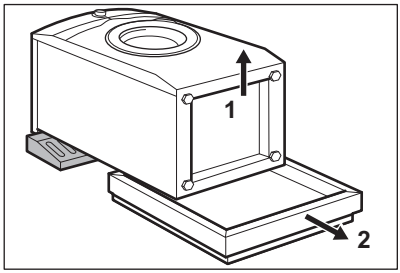

8. Fully clean and dry the bottom of the appliance.

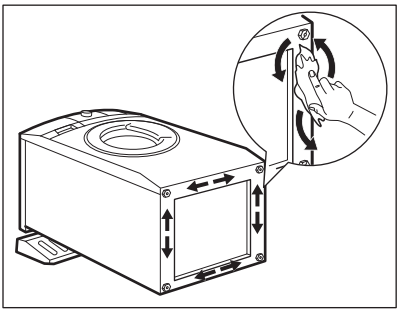

CAUTION!
Do not use alcohol, solvents or chemical products.

9. Make sure to identify the different sizes and the positions of the sound barriers. Refer to the illustration:

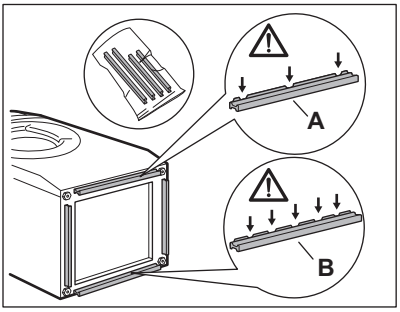

- **A** (FRONT) = Front of the appliance
- **B** (BACK) = Rear of the appliance

10. Remove the adhesive strip from the silent barriers.
11. Attach the four barriers to bottom of the appliance.
12. Refer to the illustration. Make sure that the barriers are securely attached.

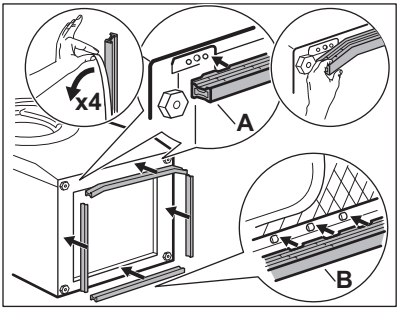

Attach the sound barriers at a room temperature.

13. Pull up the appliance in vertical position.

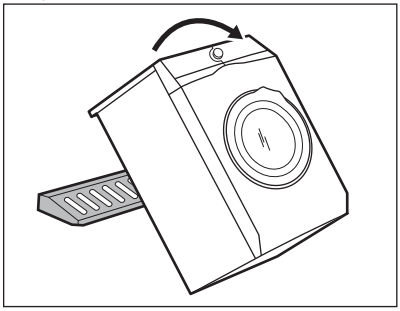

14. Remove the power supply cable and the drain hose from the hose holders.

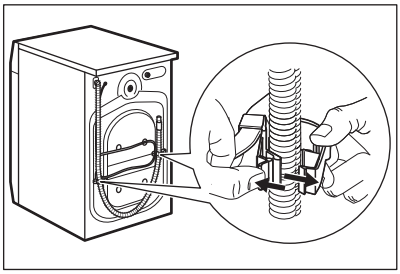

It is possible to see water flowing from the drain hose. This is due to the testing with water of the appliance in factory.

15. Remove the three bolts by using the spanner supplied with the appliance.

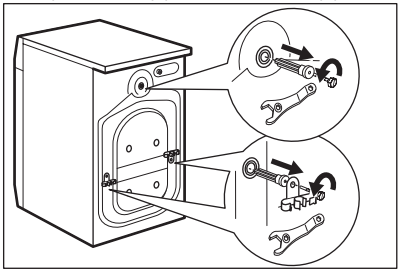

16. Pull out the plastic spacers.
17. Put the plastic caps, that you find in the user manual bag, in the holes.

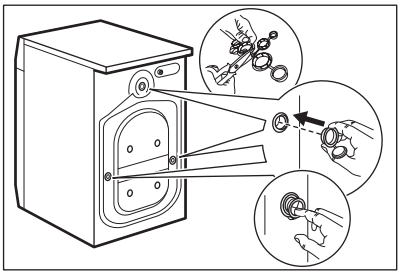

We recommend that you keep the packaging and the transit bolts for any movement of the appliance.

3.2 Installation on suspended flooring

Suspended wooden floors are particularly susceptible to vibration.

To limit vibration we recommend placing a waterproof wooden panel, at least 15 mm thick, under the appliance. It should be screwed to at least 2 floor beams and should extend beyond the front feet.

If possible, install the appliance where the floor is more stable.

3.3 Positioning and levelling

1. Install the appliance on a flat hard floor.

Make sure that the appliance does not touch the wall or other units.

2. Loosen or tighten the feet to adjust the level.

WARNING!
Do not put cardboard, wood or equivalent materials below the appliance feet to adjust the level.

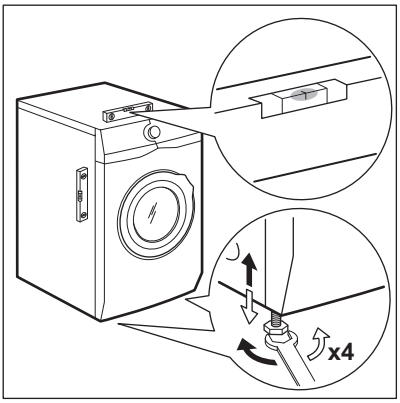

The appliance must be level and stable.

A correct adjustment of the appliance level prevents the vibration, noise and the movement of the appliance when in operation.

When the machine is installed on a plinth or if a washer dryer is stacked on the washing machine, use the accessories described in chapter 'Accessories'. Read carefully the instructions supplied with the appliance and with the accessory.

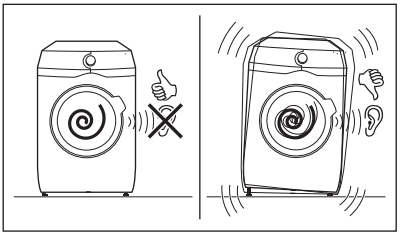

3.4 The inlet hose

1. Connect the water inlet hose to the back of the appliance.
2. Position it toward left or right depending on the position of the water tap.

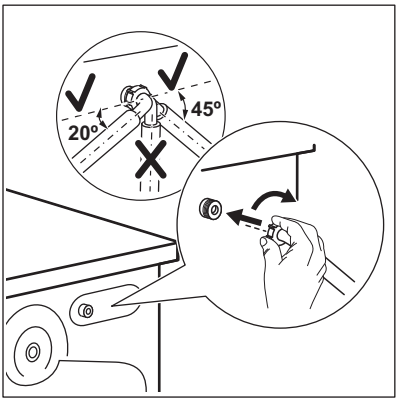

Make sure that the inlet hose is not in vertical position.

3. If necessary, loose the ring nut to set it in the correct position.
4. Connect the water inlet hose to the cold water tap with 3/4" thread.

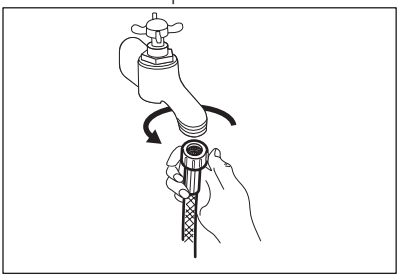

CAUTION!
Make sure that there are no leaks from the couplings.

Do not use an extension hose if the inlet hose is too short. Contact the service centre for the replacement of the inlet hose.

3.5 Water drainage

The drain hose should be positioned at a height of not less than 60 cm and not more than 100 cm from the floor.

You can extend the drain hose to maximum 400 cm. Contact the authorized service centre for the other drain hose and the extension.

It is possible to connect the drain hose in different ways:

1. Make a U shape with the drain hose and put it around the plastic hose guide.

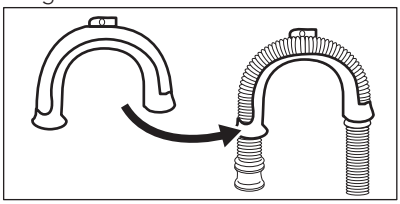

2. **On the edge of a sink** - Fasten the guide to the water tap or to the wall.

Make sure that the plastic guide cannot move when the appliance drains.

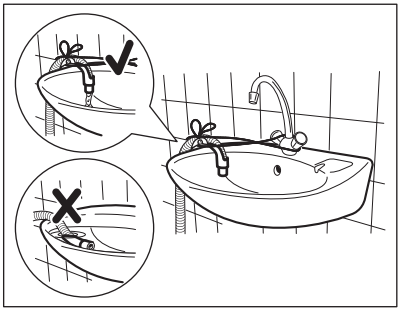

Make sure that the drain hose end is not immersed in the water. There may be a return of dirty water into the appliance.

3. **To a stand pipe with vent-hole** - Insert the drain hose directly into a drain pipe. Refer to the illustration.

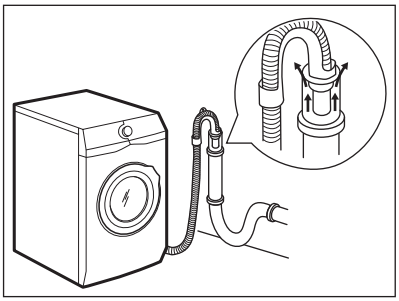

The end of the drain hose must always be ventilated , i.e. the inner diameter of the drain pipe (min. 38 mm - min. 1.5") must be larger than the external diameter of the drain hose.

4. If the end of the drain hose looks like this (see the picture), you can push it directly into the stand pipe.

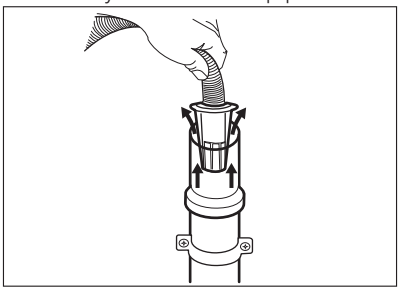

5. **Without the plastic hose guide, to a sink spigot** - Put the drain hose in the spigot and tighten it with a clamp. Refer to the illustration.

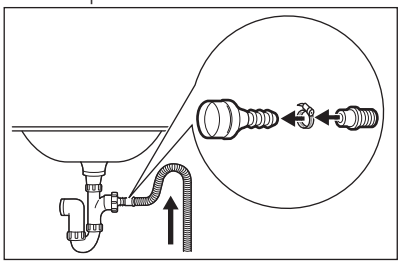

Make sure that the drain hose makes a loop to prevent particles going into the appliance from the sink.

6. Position the hose **directly to a built-in drain pipe in the room wall** and tighten it with a clamp.

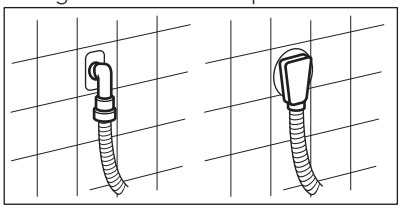

4. PRODUCT DESCRIPTION

4.1 Special features

Your new washing machine meets all modern requirements for an effective treatment of laundry with low water, energy and detergent consumption and proper care of fabric.

- The **interactive touch screen display** makes the setting and the use of the appliance more immediate and agreeable.
- The **Wi-Fi connection** and **Remote Start** enable you to start a cycle, to interact with your washing machine and to check the washing cycle status in remote control.
- The **SoftWater Technology** acts as **water softener** and removes harsh minerals from the inlet water and supplies soft water for the washing. Wash after wash, fabric stiffness, shrinkage and colour fading are prevented.
- The **Oko-Mix technology** has been designed to protect the fabric fibres thanks to different pre-mixing phases that dissolves first the detergent and then fabric softener in the water before they are distributed in the laundry. So every fibre is reached and cared for.
- Thanks to the **Weight Sensors** the appliance can detect the weight of your load and advise on how much detergent you need to achieve the best results without waste.

- The **ProSense technology** adjusts automatically the programme duration to the laundry in the drum to achieve perfect washing results in the minimum possible time.
- The steam has a quick and easy way to refresh the clothes. The gentle steam programmes remove odours and reduce creases in dry fabrics so they need little ironing.
  The **Plus Steam option**, finishes every cycle with gentle steam that relaxes the fibres and reduces fabric creasing. Ironing will be easier!
- The **Stains option** pre-treats stubborn stains optimizing the effectiveness of the stain remover.
- Thanks to the **Soft Plus option**, the fabric softener is uniformly spread out in the laundry and deeply penetrates the fabric fibres favouring a perfect softness.

4.2 Appliance overview

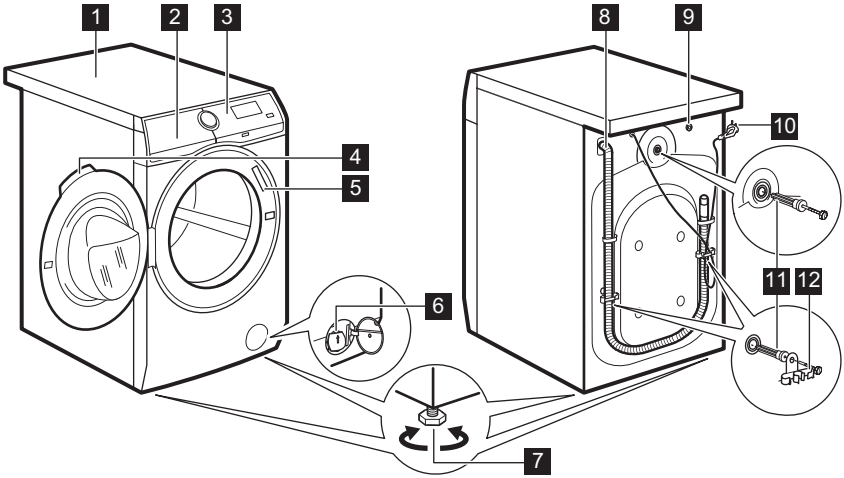

1 Worktop
2 Detergent dispenser and salt compartment
3 Control panel
4 Door handle
5 Rating plate
6 Drain pump filter
7 Feet for levelling the appliance
8 Drain hose
9 Inlet hose connection
10 Mains cable
11 Transit bolts
12 Hose support

4.3 Detergent dispenser and salt compartment

Always follow the instructions that you find on the packaging of the detergent products. Anyway, we recommend not to exceed the maximum indicated level in each compartment (**MAX**).

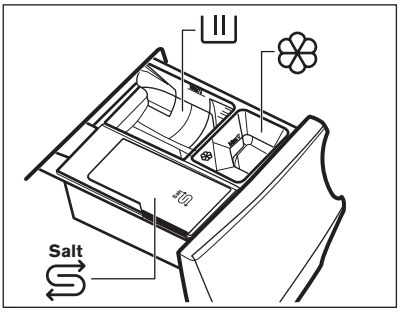

Compartment for washing phase: powder detergent, stain remover.

When using liquid detergent, make sure that the special container for liquid detergent is inserted. Refer to 'Filling the detergent and additives' in 'Daily Use' chapter.

Compartment for liquid additives (fabric conditioner, starch).

Salt Compartment for salt.

Read carefully 'The Water Softener technology (Soft Water)'.

MAX Maximum level for detergent/ additives quantity.

When selecting a prewash phase, put the detergent/ additive in a dosing ball inside the drum.

After a washing cycle, if necessary, remove any detergent residue from the detergent dispenser.

5. THE WATER SOFTENER (SOFT WATER)

5.1 Introduction

The water contains harsh minerals. The higher the content of these minerals the harder the water is.

Hard water can reduce the effectiveness of the detergent, reduce the softness of fabrics and contribute towards shrinkage and colour fading.

This appliance is equipped with a water softener able to provide the right degree of water softening to preserve the fabric integrity, colour brightness and ensuring good wash performances at low temperature.

The water softener should be adjusted according to the water hardness of your inlet water. A correct setting allows to achieve the best washing results and the maximum garments protection.

To set the water softener correctly, please refer to 'How to set the water hardness level'.

The first time you turn the appliance on, the touch screen proposes different settings: one on this is water hardness level.

5.2 How to set the water hardness level and activate Water Softener

The appliance allows you to chose between 7 levels corresponding to 7 different ranges of water hardness.

Depending on the country, the water hardness is expressed in equivalent scales: e.g. French degrees (°f), German degrees (°d), English degrees (°e), mmol/l and ppm.

If necessary, please contact your local water authority to check the water hardness in your area.

Check in the "Water hardness levels" table which is the proper level.

To set the water hardness level:

1. Press the **On/Off** button for a few seconds to activate the appliance.
2. Wait until the programme screen appears and scroll up and down the list to find **Settings**.

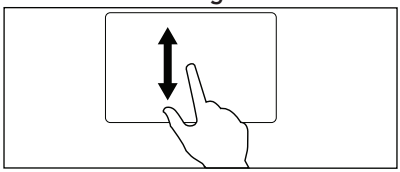

3. Tap on to enter the setting list.

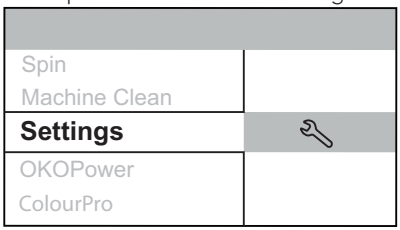

4. Scroll the list up and down to find **Water Hardness**.
5. Tap on the **Water Hardness** bar.
6. Scroll the level list right and left to chose the proper level.

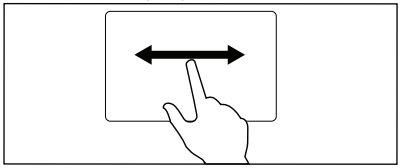

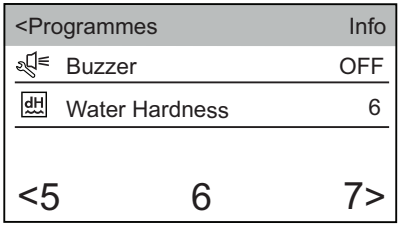

7. Tap on the **Water Hardness** bar to exit and to confirm the chosen level.
8. Scroll up and down the setting list to find the **Water Softener** bar and tap on it to enter.

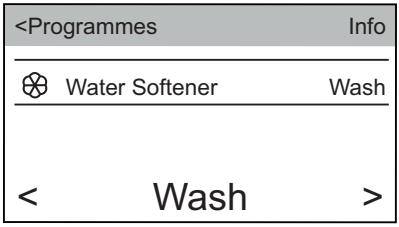

9. Scroll the bar right and left to chose:
   - **Wash**: the water softener acts during washing phase only. This setting satisfies most of the use condition.
   - **Wash & Rinse**: if the inlet water is particularly hard (**6** and **7** levels), we suggest to set the water softener also during rinsing phase to preserve the fabric softness.

   This setting increases the salt consumption.

   - **OFF**: to deactivate the water softener.

Water hardness levels

Levels	Levels as indicated on the tester[1)]	Water hardness range				
		°f (French degrees)	°d (German degrees)	°e (English degrees)	mmol/l	ppm
1	C01	≤5	≤3	≤ 4	≤0.5	≤ 50

Levels	Levels as indicated on the tester[1)]	Water hardness range				
		°f (French degrees)	°d (German degrees)	°e (English degrees)	mmol/l	ppm
2	C02	6 - 13	4 - 7	5 - 9	0.6 - 1.3	60 - 130
3	C03	14 - 21	8 - 11	10 -15	1.4 - 2.1	140 - 210
4[2)]	C04	22 - 29	12 - 16	16 - 20	2.2 - 2.9	220 - 290
5	C05	30 - 37	17 - 20	21 - 26	3.0 - 3.7	300 - 370
6	C06	38 - 45	21 -25	27 - 32	3.8 - 4.5	380 - 450
7	C07	≥46	≥26	≥33	≥4.6	≥460

1) If supplied with the appliance.

2) Factory setting, able to satisfy most of the use conditions.

5.3 Pouring salt

The water softener function acts through special resins present in the appliance.

To regenerate the resins and make them ready to soften the water pour a special salt in the compartment Salt:

1. Open the detergent dispenser.

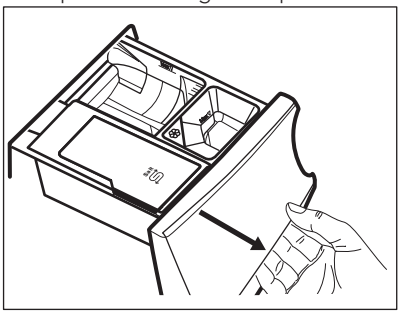

2. Open the compartment Salt.

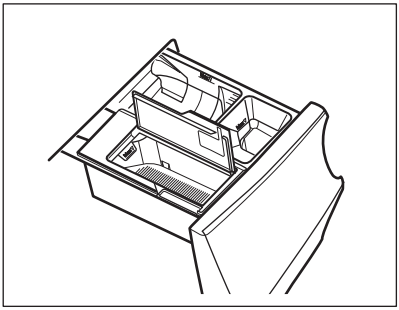

3. Pour the special salt.

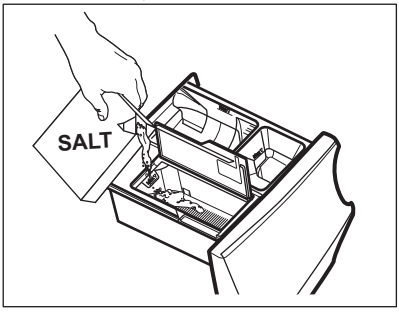

4. Close the salt compartment and the detergent dispenser.

Regularly check if there is enough salt.

The compartment Salt can contain about 600 gr of salt that are sufficient for about 20 - 300 washing cycles (or 4 - 70 weeks) depending on the set water hardness level and whether the water softener is activated during wash phase only. If the water softener is activated also during rinse phase, the salt refilling lasts 5 - 80 washing cycles (or 1 - 18 weeks) depending on the set water hardness level. Refer to 'How to set the water hardness level'.

The display shows the message **Top up salt** at the end of a cycle when compartment needs to be refilled with salt, even if a little salt still remains.

WARNING!
Pour the salt in the compartment Salt only.

WARNING!
Do not put anything but salt in the compartment Salt. If any other detergent/additive is poured inadvertently in this compartment, please refer to 'Eliminating detergent or other additives from salt compartment' in 'Troubleshooting' chapter.

Only use special salt for dishwasher and/or washing machine. The proper salt can be ordered form the web site!
Other types of salts are less efficient and over time could damage the water softener technology permanently. **Do not use fine salt!**

The appliance works normally even without salt, but without exploiting its full potential. If you use the appliance without salt for a long time, once the salt is finally refilled, the water softener function is completely restored after a few long washing cycles.

5.4 Water softener regeneration

After a few cycles, the appliance may need to regenerate the water softener.

The regeneration process takes place automatically when long cycles are used routinely (e.g. Cottons, Synthetics or Cottons Eco) without reducing the time.

If you usually run short cycles lasting less than 2 hours, the regeneration process may not occur: you could see that salt has not been used, since it is consumed during regeneration phase only.

Depending on the frequency of use and the water hardness level, **run a long cycle once a week or every two weeks at least, in order to guarantee the proper usage of soft water in your washing cycle**.

6. CONTROL PANEL

6.1 Control panel description

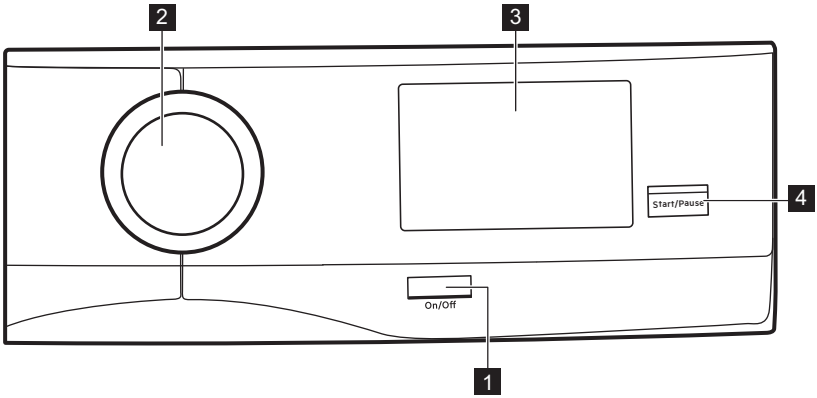

1 On/Off button (**On/Off**)
2 Programme dial
3 Touch screen
4 Start/Pause button (**Start/Pause**)

7. FIRST TIME START-UP

Each time you turn the appliance on, the Start-up Screen appears on the touch screen.



The first time you turn the appliance on, after the Start-up Screen you are guided through the initial setup procedure.

7.1 Language setup

1. Scroll the language list to find the desired language and hold the desired language pressed to set it.



2. The following screen pops up:
   - tap on **OK** to confirm the language:
   - tap on **Change** to change it.

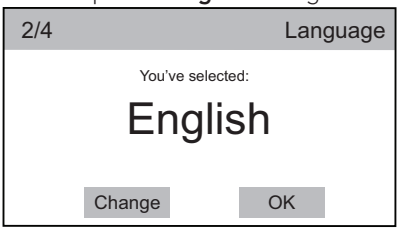

7.2 Time setup

1. Scroll the hour and minute bars to the right or to the left to set the current time.

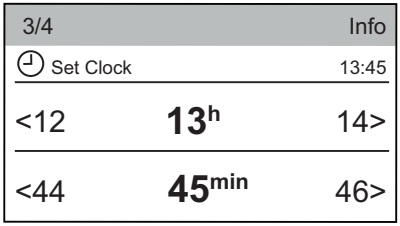

2. Tap on the **Set Clock** bar to set the time.

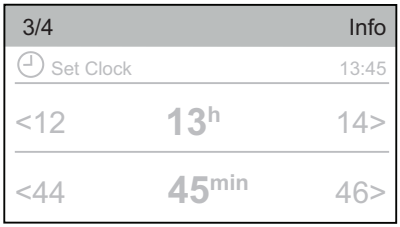

3. The following screen pops up:
   - tap on **OK** to confirm the set time.
   - tap on **Change** to change it.

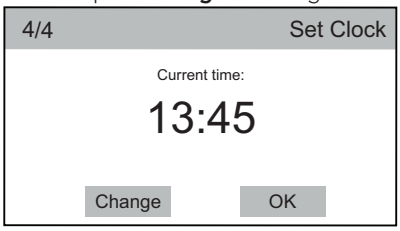

7.3 More settings

After you set the time, the **More settings** screen pops up.

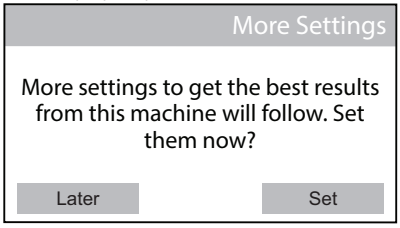

If you tap on **Later**, the programme list screen appears and you can set the desired programme.

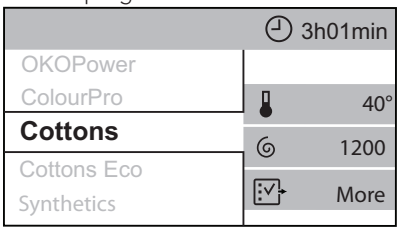

If you tap on **Set**, proceed with next settings.

7.4 Water Hardness

The display suggests to set the proper water hardness level to improve the washing results.

The following window pops up.

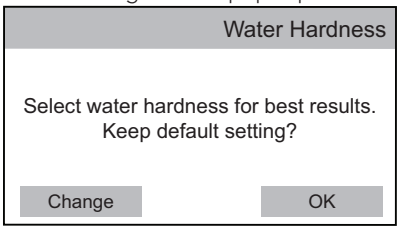

- Tap on **OK** to confirm the default setting.

1. Tap on **Change** to enter the **Water Hardness** submenu.

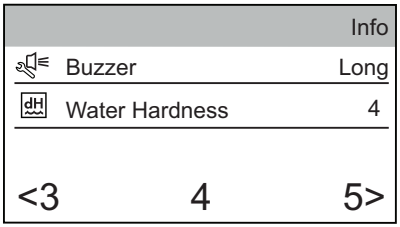

2. Scroll the level list right or left to set the desired water hardness level.
3. Tap on the **Water Hardness** bar.

The following window pops up.

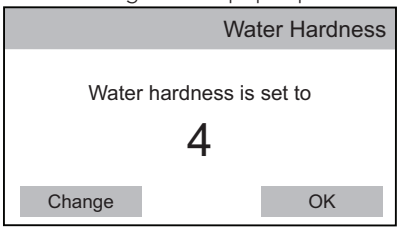

4. Tap on **OK** to confirm or on **Change** to change the level.

7.5 Detergent Dosing

You can set the average quantity of detergent suggested on the detergent packaging.

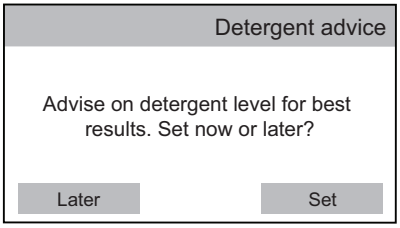

1. Tap on **Set**. The following window pops up.

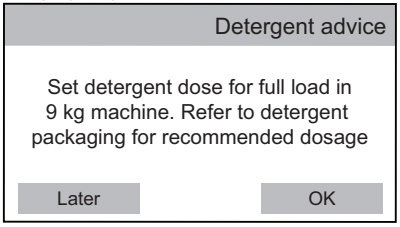

2. Tap on **OK** to enter the **Detergent Dosing** menu.
3. Tap on the **Detergent Type 1** or **Detergent Type 2** bar.

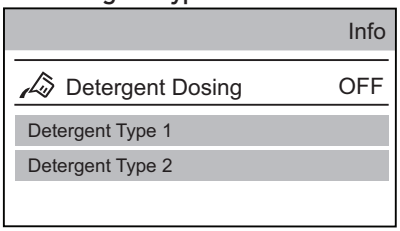

4. Scroll the submenu bar right or left to set the detergent dosage in ml that matches with the average dosage suggested on the detergent packaging.

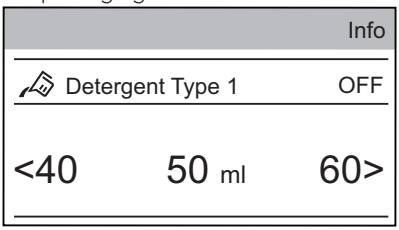

5. Tap on the **Detergent Type 1** bar. The following window pops up. Tap on **OK** to confirm your choice.

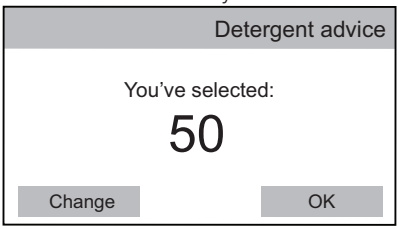

7.6 Wi-Fi

The startup ends with following dialog window.

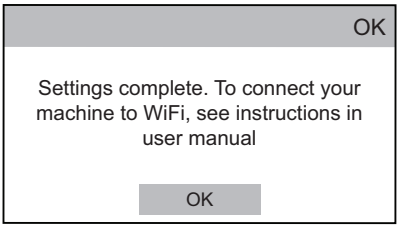

Refer to the "Wi-Fi Connectivity setup" section in the "Settings" chapter.

8. TOUCH SCREEN

Each time you turn the appliance on, the Start-up Screen appears on the touch screen.



After a few seconds, the programme list screen appears proposing Cottons as default programme.

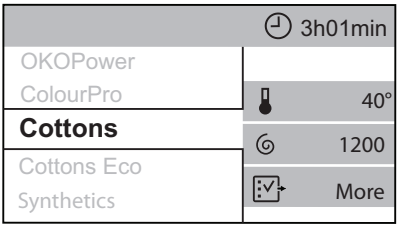

If you don't scroll the programme list up and down, in a few seconds the programme summary screen appears. To return to the programme list screen just tap on the programme name (e.g. Cottons).

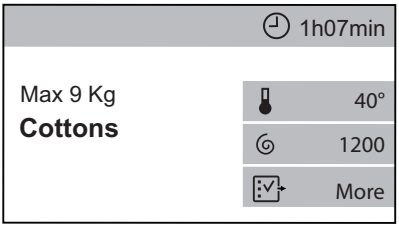

The summary screen shows:

- Programme maximum load, programme name.

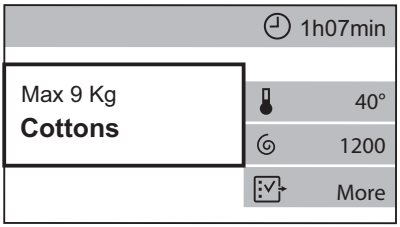

- Programme duration. If selected, this area can also show the delayed start or the **Time Save** symbol.

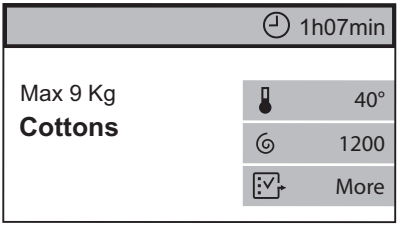

- The currently selected options. The shortcut allows to enter the additional option menu.

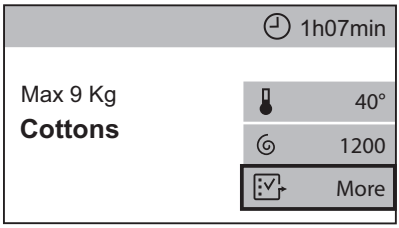

When a shortcut is visible on the summary screen, it is possible to enter an option/ setting menu by just tapping on the relevant shortcut.

The different option/setting menus can be scrolled:

- **up and down**, or

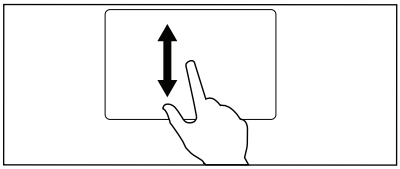

- **right or left**.

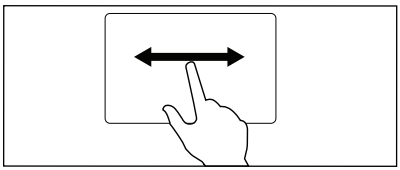

To set some options or settings it is sufficient to change the status from **OFF** to **ON** just tapping on the relevant bar.

Programmes, options and settings can also be set by turning the programme dial and in horizontal submenus the desired choice can be set just tapping on the arrows **<** or **>**.

9. WI-FI CONNECTIVITY SETUP

This chapter describes how to connect the smart appliance to the Wi-Fi network and to link it to mobile devices.

By this functionality you can receive notifications, control and monitor your washing machine from your mobile devices.

To connect the appliance to enjoy the full range of features and services you need:

- Wireless network at home with internet connection enabled.
- Mobile device connected to wireless network.

Frequency	2.412 - 2.472 GHz for European market
Protocol	IEEE 802.11b/g/n two stream radio
Max Power	<20 dBm

9.1 Installing and configuring "My AEG"

When connecting the washing machine to the application, stand near it with your smart device.

Make sure that your smart device is connected to the wireless network.

1. Go to the App Store on your smart device.
2. Download and install the App "My AEG" .
3. Make sure you started a Wi-fi connection in the washing machine. If not, read the next paragraph 'Configuring the washing machine wireless connection'.
4. Start the application. Select the country and language and login with Your email and password. If you do not have an account, create a new one following the instructions in "My AEG" .
5. Follow the instructions on the App for the washing machine registration and configuration.

A message appears on the washing machine display to confirm that the configuration was successful.

9.2 Configuring the washing machine wireless connection

1. In the programme list screen, tap on the shortcut to enter the setting menu.
2. Tap on the **Wi-Fi** bar to switch the connection on .

A pop-up message will appear, the icon starts flashing and wireless module begins starting up. It may take about 2 minutes before it is ready.

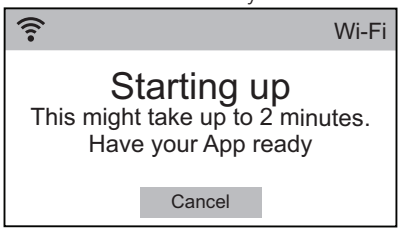

When the wireless module is ready, a pop-up message will appear to inform you, that the access point will be open for about 3 minutes.

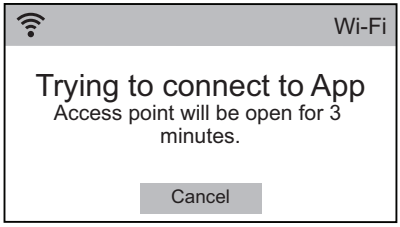

3. Configure the "My AEG" app on your smart device.
4. If the connectivity is configured, a message appears on the washing machine display to confirm that the configuration was successful.



5. Tap on **OK** to get back to the machine settings list.
6. Tap on **Programmes** to get back to the programme list screen.

Switching the wireless connection off

1. In the programme list screen, tap on the shortcut to enter the setting menu.
2. Tap on the **Wi-Fi** bar, and a new menu is shown.
3. Tap on **Turn off** .

Removing the wireless credentials

1. In the programme list screen, tap on the shortcut to enter the setting menu.
2. Tap on the **Wi-Fi** bar, and a new menu is shown.
3. Tap on **Reset network**.

9.3 Remote Start Mode

You can start and stop a washing programme remotely.

When the App is installed and the wireless connection is complete, the **Remote Start Mode** option will appear among the available options of each programme.

To activate the remote start:

1. In the programme list screen, select the desired programme.
2. When the programme summary screen appears, tap on **More** to enter the option list.
3. Tap on the **Remote Start Mode** bar to activate it (**ON** status). The following message pops up:



4. Press the **Start/Pause** button to activate the **Remote Start Mode**.

The indicators and appear on the programme summary screen and the door is locked.

If the door is open, the **Remote Start Mode** is deactivated.
If you pause or stop the cycle remotely, the door remains locked. To unlock the door, you should be in front of the appliance and press the **Start/Pause**. To avoid accidental unlocking of the doors, the **Child Lock** option can be activated.

WARNING!
If the temperature and level of the water in the drum are too high and/or the drum still rotates you cannot open the door.

9.4 Over-the-air update

The App may propose an update for downloading new features.

The update is accepted via App only.

If a programme is running, the App notifies that the update will start at the end of the programme.

During the update, the appliance shows a message telling that update is running.

The appliance will usable again at the end of the update, without any notification about successful update.

If an error occurs, the appliance warns that update has failed: just press any buttons or turn the knob to return to normal use.

10. BEFORE FIRST USE

During installation or before first use you may observe some water in the appliance. This is a residual water left in the appliance after a full functional test in the factory to ensure the appliance is delivered to customers in perfect working order and is no cause for concern.

1. Make sure that all transit bolts have been removed from the appliance.
2. Make sure that the electrical power is available and the water tap is open.
3. Make sure that there is salt in the compartment marked by Salt and set the proper water hardness level. Refer to "How to set the water hardness level".
4. Pour 2 litres of water into the detergent compartment marked by II.

This action activates the drain system.

5. Pour a small quantity of detergent into the compartment marked by II.
6. Set and start a programme for cotton at the highest temperature without any laundry in the drum.

This removes all possible dirt from the drum and the tub.

11. PROGRAMMES

11.1 Programme Chart

All washing programmes benefit from the softened water, if the water softener is active.

Washing programmes

Programme	Programme description
Washing programmes	
OKOPower	**Cotton and fast-coloured synthetic items**. Complete washing programme that, in only 59 minutes, washes the daily soiled laundry intensively and ensures a good washing performance in a short time.
ColourPro	**Coloured cottons and synthetics**. Low-temperature cycle for a greater colour protection keeping good cleaning results thanks to softened water. To get the best care of your fabrics, we recommend not to fill the drum completely.
Cottons	**White cotton and coloured cotton**. Normal, heavy and light soil.

Programme	Programme description
Cottons Eco	**White cotton and coloured cotton**. Normal, heavy and light soil. **Standard programmes for the Energy Label consumption values.** According to regulation 1061/2010, the programmes Cottons Eco at 60 °C and the programme Cottons Eco at 40 °C are respectively the «Standard 60°C cotton programme» and the «Standard 40°C cotton programme». They are the most efficient programmes in terms of combined energy and water consumption for washing normally soiled cotton laundry. The water temperature of the washing phase may differ from the temperature declared for the selected programme. If you set any option, the indicator disappears to indicate that the programme doesn't correspond to the energy label data anymore.
Synthetics	**Synthetic items or mixed fabric items**. Normal soil.
Delicates	**Delicate fabrics such as acrylics, viscose and mixed fabrics requiring gentler washing**. Normal soil.
Wool/Silk	**Machine washable wool, hand washable wool and other fabrics** with «hand washing» care symbol[1)]. **Woolmark Apparel Care - Green** The wool wash cycle of this machine has been approved by The Woolmark Company for the washing of wool garments labelled as «hand wash» provided that the garments are washed according to the instructions issued by the manufacturer of this washing machine. Follow the garment care label for drying and other laundry instructions. M1361 In UK, Eire, Hong Kong and India the Woolmark symbol is a certification trademark.
Steam programme	

Programme	Programme description
Steam	**Steam programme for cotton and synthetic items.** Steam can be used for dried[2)], washed or worn once laundry. This programme reduce creases and odours[3)] and relaxes the fibres. When the programme is completed, quickly remove the laundry from the drum. After a steam programme, ironing becomes effortless. Do not use any detergent. If necessary, remove stains by washing or using localized stain removal. Steam programmes do not perform any hygienic cycle. Do not set a Steam programme with these types of items: • Items that are not suitable for tumble drying. • Items with label "Dry clean only".
Washing programmes	
20min 3kg	**Cotton and synthetic items** lightly soiled or once worn.
Outdoor	Do not use fabric softener and make sure that there is no softener residue in the detergent dispenser. **Outdoor clothing, technical, sport fabrics, waterproof and breathable jackets, shell jackets with a removable fleece or inner insulation**. The recommended laundry load is 2.5 kg. This programme can also be used as water-repellent restoring cycle, specifically tailored for treating clothes with a hydrophobic coating. To perform the water-repellent restoring cycle, proceed as follows: • Pour the washing detergent in the compartment II. • Pour a special water-repellent restorer for fabric in the drawer compartment for fabric softener ❀. • Reduce the laundry load to 1 kg. To further improve the water-repellent restoring action, dry the laundry in a tumble dryer by setting the Outdoor drying programme (if available and if the garment care label permits tumble drying).
Jeans	**Denim clothing and jersey items**. Normal soil. This programme performs a gentle rinsing phase, designed for denim, that reduces fading and does not cause washing powder residues on the fibres.

Programme	Programme description
Anti-Allergy	**White cotton items**. This programme removes micro-organisms thanks to a washing phase with the temperature maintained above 60°C for several minutes. This helps remove germs, bacteria, micro-organism and particles. An additional rinsing phase ensures a proper removal of detergent residues and pollens/allergenic items. In this way the wash is more effective.
Rinse	**All fabrics, except woollens and very delicate fabrics.** Programme for rinsing and spinning the laundry. The default spin speed is the one used for cotton programmes. Reduce the spin speed accordingly to the type of laundry. If necessary, set the Extra Rinse option to add rinses. With a low spin speed the appliance performs delicate rinses and a short spin.
Drain	**All fabrics, except woollens and very delicate fabrics.** Programme for draining the water left in the drum.
Spin	**All fabrics, except woollens and very delicate fabrics.** Programme for spinning the laundry and draining the water left in the drum. The default spin speed is the one used for cotton programmes. Reduce the spin speed accordingly to the type of laundry.
Machine Clean	Maintenance cycle with hot water to clean and freshen the drum and to remove residue that may cause odour. For the best result use this cycle once a month. Before running this cycle, remove all items from the drum. Pour a cup of chlorine bleach or a washing machine cleaner in the washing phase compartment. **DO NOT** use both together. ⓘ After the drum cleaning, run a further rinse cycle with empty drum and no detergent to remove any residue of bleach. ⓘ Run this programme especially when the message **Cleaning cycle recommended** pops up. If the cleaning programme is postponed, the message keeps on popping up during next uses until it is run.

1) During this cycle the drum rotates slowly to ensure a gentle wash. It can seem that the drum doesn't rotate or doesn't rotate properly, but this is normal for this programme.

2) If you set a Steam programme with dried laundry, at the end of the cycle the laundry can be humid. Line dry the items for about 10 minutes.

3) Steam programme doesn't remove particularly intense odour.

Programme temperature, maximum spin speed and maximum load

Programme	Default temperature Temperature range	Reference spin speed Spin speed range	Maximum load
OKOPower	30 °C 60 °C - 30 °C	1600 rpm 1600 rpm - 400 rpm	5 kg
ColourPro	30 °C 30 °C - Cold	1200 rpm 1200 rpm - 400 rpm	9 kg
Cottons	40 °C 95 °C - Cold	1600 rpm 1600 rpm - 400 rpm	9 kg
Cottons Eco	40 °C 60 °C - 40 °C	1600 rpm 1600 rpm - 400 rpm	9 kg
Synthetics	40 °C 60 °C - Cold	1200 rpm 1200 rpm - 400 rpm	4 kg
Delicates	30 °C 40 °C - Cold	1200 rpm 1200 rpm - 400 rpm	4 kg
Wool/Silk	40 °C 40 °C - Cold	1200 rpm 1200 rpm - 400 rpm	2 kg
Steam	-	-	1.5 kg
20min 3kg	30 °C 40 °C - 30 °C	1200 rpm 1200 rpm - 400 rpm	3 kg
Outdoor	30 °C 40 °C - Cold	1200 rpm 1200 rpm - 400 rpm	2.5 kg[1)] 1 kg[2)]
Jeans	40 °C 60 °C - Cold	1200 rpm 1200 rpm - 400 rpm	9 kg
Anti-Allergy	60 °C	1600 rpm 1600 rpm - 400 rpm	9 kg
Rinse	-	1600 rpm 1600 rpm - 400 rpm	9 kg
Drain	-	-	9 kg
Spin	-	1600 rpm 1600 rpm - 400 rpm	9 kg
Machine Clean	60 °C	1200 rpm 1200 rpm - 400 rpm	-

1) Washing programme.

2) Washing programme and waterproofing phase.

Programme options compatibility

When you set a washing programme and enter the menu, the display shows the available options only.
Child Lock, **Delay Start** and **Memory** are selectable with all programmes.

	Time Save [1]	Spin Speed	Rinse & Hold	Silent	Eco[2]	Stains[3]	Prewash	Soak	Extra Rinse	Plus Steam[3]	Soft Plus	Anti-crease	Steam Level
OKOPower		■	■						■		■	■	
ColourPro	■	■	■	■				■	■		■	■	
Cottons	■	■	■	■	■	■	■	■	■	■	■	■	
Cottons Eco	■	■	■	■		■	■	■	■	■	■	■	
Synthetics	■	■	■	■	■	■	■	■	■	■	■	■	
Delicates	■	■	■	■	■				■		■	■	
Wool/Silk		■	■										
Steam													■
20min 3kg		■										■	
Outdoor		■	■						■			■	
Jeans	■	■	■		■	■	■		■	■	■	■	
Anti-Allergy		■	■			■	■		■	■	■	■	
Rinse		■	■						■			■	
Drain													
Spin		■											
Machine Clean		■											

1) If you set the shortest duration, we recommend that you decrease the load size. It is possible to fully load the appliance, however the washing results can be less satisfactory.

2) This option is not available with a temperature lower than 30 °C.

3) This option is not available with temperature lower than 40 °C.

12. OPTIONS

12.1 Introduction

When you enter the menu **More**, the display will show only the options available for the programme set.

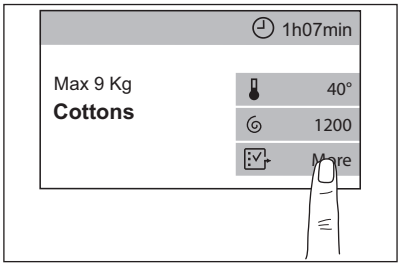

When an option shortcut is on the programme summary screen, just tap on it to enter the relevant option submenu directly.

To turn an option on/off or to enter the option submenu, tap on the option bar.

To exit the option submenu, tap on the option bar again.

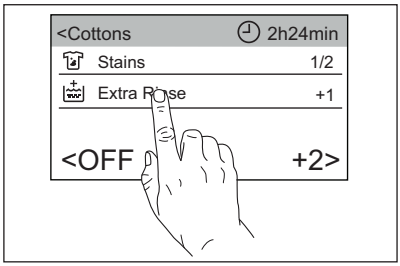

To return to the programme summary screen, tap on the programme bar.

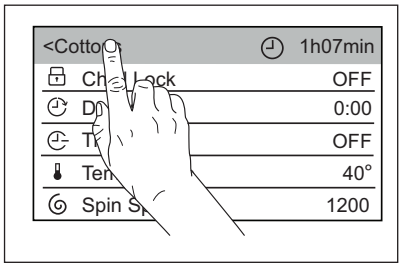

12.2 Child Lock

With this option you can prevent the children from accidentally operating the appliance.

To **activate** this option:

- Tap on the **Child Lock** bar, the appliance goes back to programme summary screen automatically and the shortcut **comes on**.

You can activate this option:

- After you have pressed the Start/Pause button: Start/Pause button and the touch screen are deactivated. It is possible to turn the appliance off by means of the On/Off button.
- Before pressing the Start/Pause button: the appliance cannot start.

The appliance keeps the selection of this option after you switch it off.

To **deactivate** this option:

- Keep the shortcut pressed for 3 seconds until it **goes off**.

If the shortcut is on, you can **activate** this option by tapping on the shortcut without entering the **More** menu. Refer to "Shortcuts" in chapter "Settings".

12.3 Delay Start

With this option you can delay the start of a programme to a more convenient time.

1. Tap on the **Delay Start** bar to enter the submenu.
2. Scroll left or right the hour and/ minute bars to set the desired delay start.

When you return to programme summary screen, the indicator and the set delay time appear alternating with the indicator and the programme duration.

After touching the Start/Pause button, the appliance begins the countdown and the door is locked.

12.4 Time Save

With this option you can decrease the programme duration (**OFF**= normal programme duration).

1. Tap on the **Time Save** bar to enter the submenu.
2. Scroll the submenu bar right to set:

- **Quick** option (**Mid**): if your laundry is normally or lightly soiled, it may be advisable to shorten the washing programme.
- **Extra Quick** option (**Max**): in case of smaller load.

When you return to programme summary screen, the indicator **Quick** or **Extra Quick** appears replacing the indicator and the programme duration is updated.

12.5 Temperature

When you select a washing programme, the appliance automatically proposes a default temperature.

1. Tap on the **Temperature** bar to enter the submenu.
2. Scroll the submenu bar to set the desired temperature. **Cold**= Cold wash.

When you return to programme summary screen, the set temperature will be shown.

12.6 Spin Speed

When you set a programme, the appliance automatically selects the maximum spin speed.

1. Tap on the **Spin Speed** bar to enter the submenu.
2. Scroll the submenu bar right or left to:

- **Decrease the spin speed**;

The display shows only the spin speeds available for the set programme.

- or **activate the Rinse & Hold option** ;
  When you return to programme summary screen, the indicator shows up.
  The water of the last rinse is not drained out to prevent the fabrics from creasing. The washing programme ends with water in the drum and the final spin phase is not performed.
  The door stays locked.
  The drum turns regularly to reduce creasing. You must drain the water to unlock the door.
  Touch the **Start/Pause** button: the appliance performs the spinning phase and drains the water.
- or **activate the Silent option.**
  When you return to programme summary screen, the indicator dB will be on.
  All spinning phases (intermediate spin and final spin) are suppressed and the programme ends with water in the drum. This helps to reduce creasing. As the programme is very quiet, it is suitable for use at night time when cheaper electricity tariffs are available. In some programmes the rinses are performed with more water.
  The door stays locked.
  The drum turns regularly to reduce creasing. You must drain the water to unlock the door.
  Touch the **Start/Pause** button: the appliance performs the draining phase only.

The appliance empties the water out automatically after approximately 18 hours.

12.7 Eco

Set this option for slightly or normally soiled items washed at 30°C or higher temperatures.

Tap on the Eco bar to turn the option on.

The appliance decreases the washing temperature and extends the washing time to obtain a good washing efficiency by saving energy.

When you return to programme summary screen, the shortcut will be on.

12.8 Stains

1. Tap on the **Stains** bar to enter the submenu.
2. Tap on the bar of the option you want to set:

- **Stains**
  Select this option to pre-treat heavily soiled or stained laundry using stain remover.
  Pour the stain remover into compartment II. The stain remover is pre-mixed and heated with detergent in order to improve its effectiveness.

  This option can increase the programme duration.

  This option is not available with a temperature lower than 40 °C.
- **Prewash**
  Use this option to add a prewash phase at 30 °C before the washing phase.
  This option is recommended for heavily soiled laundry, especially if containing sand, dust , mud and other solid particles.

  Put the detergent for prewash in a dosing ball inside the drum.

  This option can increase the programme duration.
- **Soak**
  Use this function for heavy soiled garments. The appliance soaks the laundry at 30°C for about half an hour before washing.

When you return to programme summary screen, the shortcut will be on.

12.9 Extra Rinse

With this option you can add up to 3 rinses accordingly to the selected washing programmes.

Useful for people allergic to detergents and with sensitive skin.

1. Tap on the **Extra Rinse** bar to enter the option submenu.
2. Scroll the bar right to add from 1, 2 or 3 additional rinses (**OFF**= no additional rinse).

When you return to programme summary screen, the shortcut will be on. The dots indicate the number of additional rinses selected.

This option increases the programme duration.

If the Extra Rinse is set as a default option and you select a compatible washing programme, the touch screen will show . In this case, by setting the Extra Rinse option , it is possible to add just one rinse .

12.10 Plus Steam

This option adds a steam phase followed by a short anti-crease phase at the end of the washing programme.

The steam phase reduces fabric creasing and facilitates the fabric ironing.

Tap on the **Plus Steam** bar to activate the option (**ON** status).

This option can increase the programme duration.

A small laundry load helps to reach better results.

When you return to programme summary screen, the shortcut will be on.

12.11 Soft Plus

Set the Soft Plus option to optimise the fabric softener distribution and improve the fabric softness.

It is suggested when using the fabric softener and especially when the drum is full and the laundry is very soiled.

This option increases slightly the programme duration.

Tap on the Soft Plus bar to activate the option (**ON** status).

When you return to programme summary screen, the shortcut will be on.

12.12 Anti-crease

When this option is set, at the end of the cycle the drum performs smooth movements for about 30 minutes to favour the garments softness.

Tap on the **Anti-crease** bar to activate the option (**ON** status).

When you return to programme summary screen, the shortcut will be on.

12.13 Steam Level

With this option you can change the steam level depending on the laundry size.

1. Tap on the **Steam Level** bar to enter the submenu.
2. Scroll the list right or left to set one of the following levels:
   - **Minimum**
   - **Medium**
   - **Maximum**

This is available with the **Steam** programme only.

12.14 ☆ Memory

With this option it is possible to save the two most used washing programmes.

To **save** your favourite programmes:

1. First set the washing programme and the desired options.
2. Tap on the **Memory** bar to enter the submenu.
3. Tap on the **Memory 1** or **Memory 2** to save the set programme. The status will change from **Empty** to **In Use** .

When you return to programme list screen, the **M1** or **M2** will be on next to the programme name when you set it.

Afterwards, each time you turn the appliance on, the **M1** and/or **M2** programmes appear among the first five programmes automatically proposed by the appliance and you can set them in the programme list screen directly.

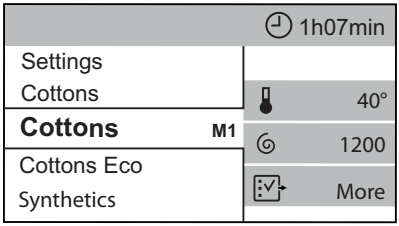

To **change** a saved programme:

1. First set the washing programme and the desired options.
2. Tap on the **Memory** bar to enter the submenu.
3. Tap on the **Memory 1** or **Memory 2** bar with **In Use** status. A message pops up asking if you want to empty or replace the saved programme.
4. Tap on **Replace**.

To **cancel** a saved programme:

1. Tap on the **Memory** bar to enter the submenu.
2. Tap on the **Memory 1** or **Memory 2** bar. A message pops up asking if you want to empty or replace the saved programme.
3. Tap on **Empty**. **M1** or **M2** will disappear in the programme list screen.

12.15 Remote Start Mode

The remote start is available after you have completed the App installing and downloading and washing machine wireless connection. Refer to "Wi-Fi Connectivity setup" chapter.

With this option you can start a washing programme remotely.

Tap on the **Remote Start Mode** bar to activate it.

When you return to programme summary screen, the shortcut will be on and the door will be locked.

If **Remote Start Mode** is activated, the Stand-by function **doesn't deactivate** the appliance.

13. DAILY USE

WARNING!
Refer to Safety chapters.

13.1 Using weight sensors

For a correct use of the weight sensor, the drum must be empty when activating the appliance.
Set the programme BEFORE you put the laundry in the drum.

13.2 Before activating the appliance

1. Make sure that the mains plug is connected to the mains socket.
2. Make sure that the water tap is open.

13.3 Activating the appliance and setting a programme

Press the **On/Off** button to turn the appliance on.

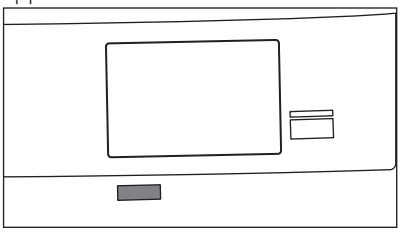

A short tune sounds (if activated). The appliance proposes **Cottons** as default programme.
The led of **Start/Pause** button flashes.

13.4 Stand-by function

The Stand-by function automatically deactivates the appliance to decrease the energy consumption when:

- You do not use the appliance for 5 minutes before pressing the **Start/Pause** button and turning the appliance on.
  Press the **On/Off** button to activate the appliance again.
- After 5 minutes from the end of the washing programme.
  Press the **On/Off** button to activate the appliance again.
  The display shows the end of the last set programme.
  Turn the programme dial to set a new cycle.

If you set a programme or an option that ends with water in the drum, the Stand-by function **doesn't deactivate** the appliance to remind you to drain the water.

If **Remote Start Mode** is activated, the Stand-by function **doesn't deactivate** the appliance.

13.5 Setting a programme

1. Turn the programme dial to set the desired programme.

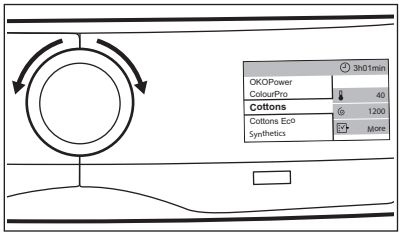

Or just tap on the programme name in the programme summary window to return to the programme list window and scroll the programme list up or down to set the desired programme.

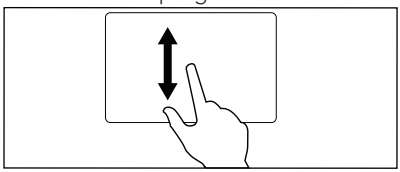

2. After a few seconds the display shows programme summary screen indicating the maximum load, the default temperature, the maximum spin speed and the programme duration.
3. You can tap on the **Temperature** bar to change the water temperature.
4. You can tap on the **Spin Speed** bar to change the spin speed or to set **Rinse & Hold** or **Silent** option.
5. You can tap on **More** to enter the menu of the additional available options and set one or more of them.

Afterwards, the shortcuts of the set options show up on the programme summary screen.

The message **This setting is not available** pops up in case of wrong selection.

13.6 Loading the laundry

1. Open the appliance door.

The weight sensor window pops up.



2. Shake the garments before you put them in the drum.
3. Put the laundry in the drum, one item at time.

On the display the weight of the laundry is updated by steps of 0.5 kg and the programme duration is updated accordingly when you return to the programme summary screen.

If you put in the drum more laundry than the maximum load, the display tells that the suggested load has been exceeded.
You can wash your laundry anyway, but the water and energy consumption increase.
To have the best consumption and washing performance remove the excess items.
The overload indication is shown only in programmes with a maximum load lower than the appliance maximum load.

4. Close the door. Make sure that no laundry stays between the seal and the door. There is a risk of water leakage or damage to the laundry.

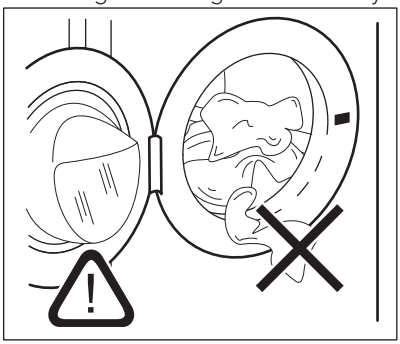

5. If you have already set **Detergent Type 1** or **Detergent Type 2** with average suggested dosage for the type of detergent you are using , the appliance recommends the detergent quantity to pour.

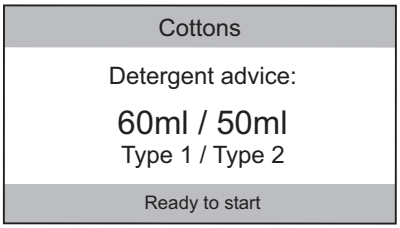

Refer to the "Detergent Dosing" section in the chapter "Settings".

If you change the washing programme after closing the door, the display may tell you that the laundry is now exceeding the maximum recommended load for the new programme: open the door and remove a few garments.

13.7 Filling the detergent and additives

We recommend that you do not exceed the maximum indicated level (**MAX**).

1. Open the detergent dispenser.

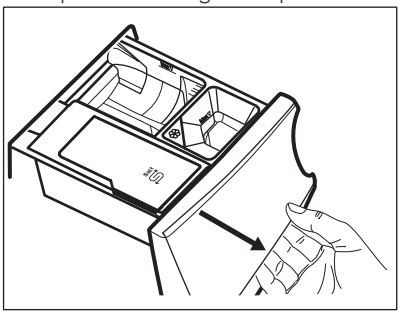

2. Put the powder detergent in the compartment II. If using liquid detergent, refer to 'Filling the liquid detergent'.

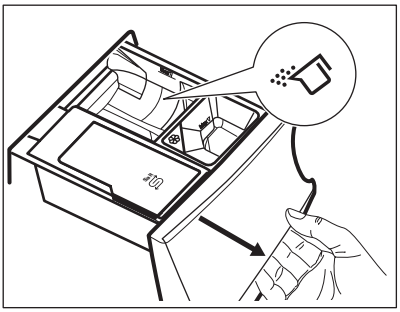

3. If desired, pour the fabric softener in the compartment ❀.

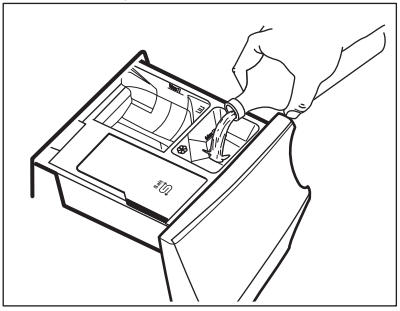

4. Close the detergent dispenser.

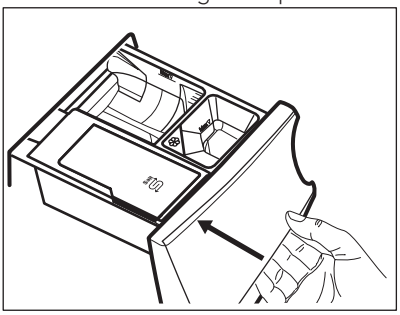

Filling the liquid detergent

1. Insert the proper container for liquid detergent.

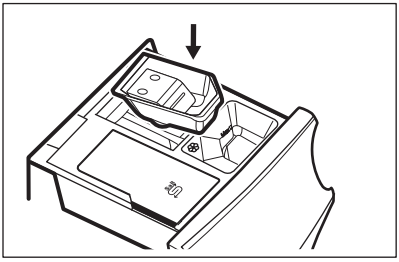

2. Pour the liquid detergent in the compartment .

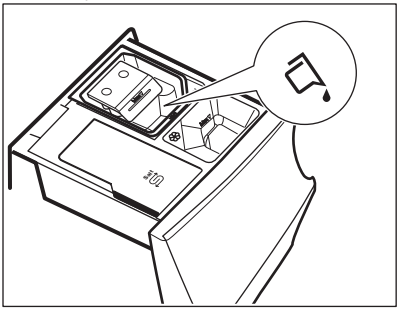

3. Close the detergent dispenser.

13.8 Starting a programme

1. Touch the **Start/Pause** button to start the programme.

The related led stops flashing and stays on.
The door is locked.
The window describing the running programme pops up, showing:

- The programme name.
- The remaining time to programme end.
- The progress bar.
- The ProSense phase first and then the running programme phase.
- The indicator . When it is on, it is still possible to stop the cycle and add clothes.
- The door locked indicator , when the indicator goes off.
- The estimated cycle end time.
- The shortcut .

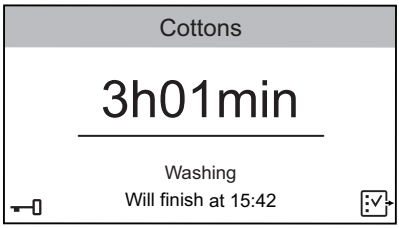

The drain pump can operate shortly before the appliance fills water.

2. If necessary, tap on to enter the option list and activate the **Child Lock** option. Refer to "Child Lock" section in the "Options" chapter.

The shortcut shows up. Keep pressed for about three seconds to deactivate the **Child Lock**.

Starting a programme with delay start

1. Touch the **Start/Pause** button to start the programme.

The related led stops flashing and stays on.
The door is locked.
The appliance starts the countdown and the door is locked.

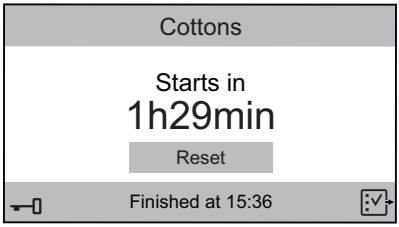

2. Tap on **Reset** to cancel the delay start and then touch the **Start/Pause** button or wait until the countdown is completed.

The programme will start normally.

The ProSense detection starts at the end of the countdown.

During the cycle, the display will inform you about each running phase (e.g. washing, rinsing and so on).

13.9 The ProSense load detection

After touching the **Start/Pause** button:

1. The ProSense starts the laundry load detection to calculate the real programme duration. The display shows the message **Adjusting programme to current load**. The appliance adjusts automatically the programme duration to the load to achieve perfect washing results in the minimum possible time. The programme duration could increase or decrease.
2. After about 20 minutes the display shows the new programme duration, the expected programme time and advise you about the running phase.

The ProSense detection is carried out with complete washing programmes only.

13.10 Interrupting a programme and changing the options

When the programme is running, you can change only some options:

1. Touch the **Start/Pause** button .

The related led start flashing.

2. Tap on to change the options.

In the option list only the available options will be active.

3. Touch the **Start/Pause** button again.

The washing programme continues and the programme duration can change.

13.11 Cancelling a running programme

1. Press the **On/Off** button to cancel the programme and to deactivate the appliance.
2. Press the **On/Off** button again to activate the appliance.

Now, you can set a new washing programme.

If the ProSense phase is already carried out and the water filling is already started, the new programme starts **without repeating the ProSense phase**. The water and the detergent are not drained out in order to avoid waste.

13.12 Opening the door

If the temperature and level of the water in the drum are too high and/or the drum still rotates you cannot open the door.

If is on: the water temperature and level are not high and it is still possible to open the door and add clothes.

While a programme or the delay start operates, the appliance door is locked.

1. Touch the **Start/Pause** button .

In the display the related door lock indicator goes off.

2. Open the appliance door. If necessary, add or remove the items.
3. Close the door and touch the **Start/Pause** button.

The programme or the delay start continues.

13.13 End of the programme

When the programme has finished, the appliance stops automatically. The acoustic signals operate (if they are active).

The display tells that the cycle is finished and shows **0h00min**.

The **Start/Pause** button goes off.

The door unlocks and the indicator goes off.

1. Press the **On/Off** button to deactivate the appliance.

After five minutes after the end of the programme, the energy saving function automatically deactivates the appliance.

When you activate the appliance again, the display shows the end of the last selected programme. Turn the programme dial to set a new cycle.

2. Remove the laundry from the appliance.
3. Make sure that the drum is empty.
4. Keep the door and the detergent dispenser slightly ajar to prevent mildew and odours.
5. Close the water tap.

13.14 Draining water out after end of cycle

If you have chosen a programme or an option that does not empty out the water of the last rinse, the programme is completed, but:

- The display shows **0 min** and the **Start/Pause** button starts flashing.
- The drum still turns at regular intervals to prevent the creases in the laundry.
- The indicator is still on and the door stays locked.
- You must drain the water to open the door:

1. Touch the **Start/Pause** button:
   - If you have set , the appliance drains the water and spins.
   - If you have set dB, the appliance only drains the water.
2. If necessary, change the spin speed proposed by the appliance: touch the **Start/Pause** button to pause the programme; tap on and then on the **Spin Speed** bar.
3. When the programme is completed and the door locked indicator goes off, you can open the door.
4. Press the **On/Off** button for a few seconds to deactivate the appliance.

In any case, the appliance empties the water out automatically after approximately 18 hours.

14. SETTINGS

14.1 Introduction

1. In the programme summary screen, just tap on the screen to return to the programme list screen.
2. Scroll the list up or down to find **Settings**.

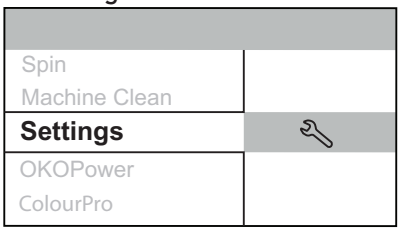

3. Tap on the shortcut to enter the setting menu.
4. Scroll the setting list up or down to find the setting you want to change.

14.2 Set Clock

To change the time:

1. Tap on the **Set Clock** bar to enter the submenu.
2. Scroll the minute and the hour bars right or left to set the current time.

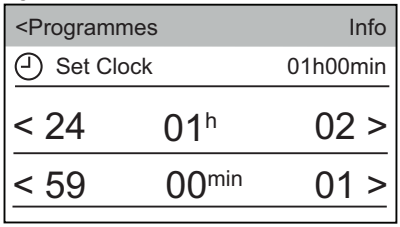

3. Tap on the **Set Clock** bar to return to the machine setting list or tap on the **Programmes** bar to return to the programme summary screen.

14.3 Set Language

To change the language:

1. Tap on the **Language** bar.
2. Scroll the language list up or down to find the desired language and hold it pressed.



3. The screen returns to the setting list automatically. Tap on the **Programmes** bar to return to the programme summary screen.

14.4 Display Brightness

You can regulate the display brightness through 5 brightness levels.

To change the display brightness:

1. Tap on the **Display Brightness** bar.
2. Scroll the brightness level bar right or left to find the desired level.

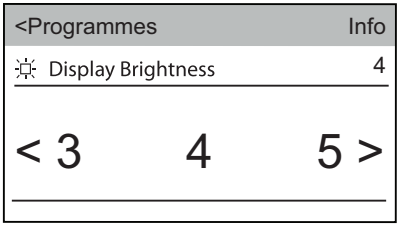

3. Tap on the **Display Brightness** bar to return to the machine setting list or tap on the **Programmes** bar to return to the programme summary screen.

14.5 Cycle End Buzzer

A buzzer sounds at the end of a cycle.

To **deactivate** the buzzer or to **change** its duration:

1. Tap on the **Cycle End Buzzer** bar.
2. Scroll the bar right or left to set the desired set:
   - **OFF**
   - **Short**
   - **Mid**
   - **Long**
3. Tap on the **Cycle End Buzzer** bar and then to the **Programmes** bar to return to the programme summary screen.

If the Cycle End Buzzer is on, the screen shows the shortcut (buzzer on) or (buzzer off). Refer to "Shortcuts" section in this chapter.

14.6 Water Hardness

To set the proper water hardness level, read the "The Water Softener (SoftWater Technology)" chapter carefully.

To change the water hardness:

1. Tap on the **Water Hardness** bar.
2. Scroll right or left to set the proper water level.

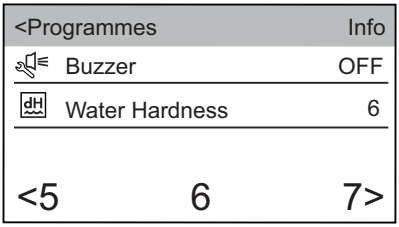

3. Tap on the **Set Clock** bar to return to the machine setting list or tap on the **Programmes** bar to return to the programme summary screen.

14.7 Extra Rinse Default

With this option you can permanently have two additional rinses each time you switch the appliance on and if you set a compatible programme.

To **activate/deactivate** this option:

1. Tap on the **Extra Rinse Default** bar (**ON** status).
2. Tap on the **Programmes** bar to return to the programme summary screen.

If the **Extra Rinse Default** is active, the screen will show and by setting the Extra Rinse option, it will be possible to add just one rinse .

If the **Extra Rinse Default** is activated, the screen will also show the shortcut . Refer to "Shortcuts" section in this chapter.

14.8 Soft Plus Default

Set the **Soft Plus Default** to optimise the fabric softener distribution and improve the fabric softness. The **Soft Plus** option remains permanently on.

It is suggested when using the fabric softener and especially when the drum is full and the laundry is very soiled.

This option increases slightly the programme duration.

To **activate/deactivate** this option:
1. Tap on the **Soft Plus Default** bar (**ON** status).
2. Tap on the **Programmes** bar to return to the programme summary screen.

If **Soft Plus Default** is active, the shortcut will be on if you set a compatible programme.

14.9 Detergent Dosing

Through this setting you can save the average detergent dosage suggested in the detergent packaging, so the appliance will advise you about the necessary detergent dosage for your cycles.

It is possible to set two types of detergent: e.g., the value entered in **Detergent Type 1** could refer to powder detergent and the value entered in **Detergent Type 2** could refer to liquid detergent.

1. Tap on the Detergent Dosing.
2. Tap on the **Detergent Type 1** or **Detergent Type 2** bar.

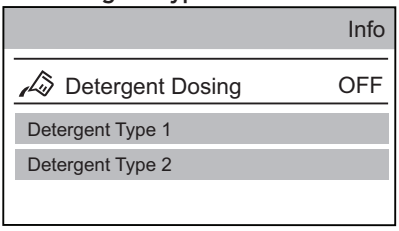

3. Scroll the bar right or left to set the average detergent dosage in ml as suggested on the detergent packaging.

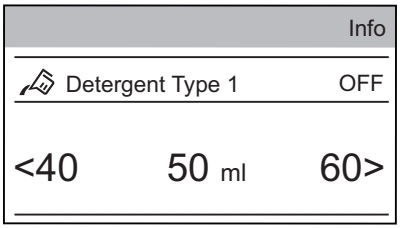

4. Tap on the **Detergent Dosing** bar to return to the machine setting list or tap on the **Programmes** bar to return to the programme summary screen.

14.10 Water Softener

Read the "The Water Softener (SoftWater Technology)" chapter carefully.

With this setting you can decide when the water softener function should operate:

1. Tap on the **Water Softener** bar.

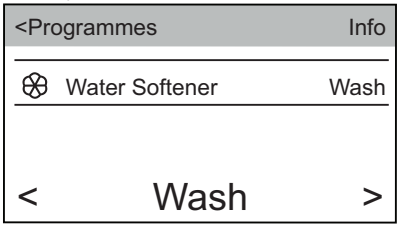

2. Scroll the submenu bar right or left to set:
   - **OFF**: the water softener function is deactivated.
   - **Wash**: the water softener function is active during washing phase only (factory setting).
   - **Wash & Rinse**: the water softener function is active during washing and rinsing phase.

This setting increases the salt consumption.

3. Tap on the **Water Softener** bar to return to the machine setting list or tap on the **Programmes** bar to return to the programme summary screen.

14.11 Service

This area is reserved for the Authorized Service.

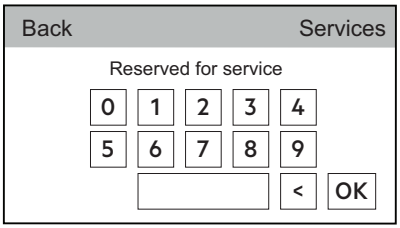

14.12 Shortcuts

This setting allows to bring the shortcuts shown in the next drawing visible on the summary screen.

To activate the shortcuts:

1. Tap on the **Shortcuts** bar to open the list of the available shortcuts.

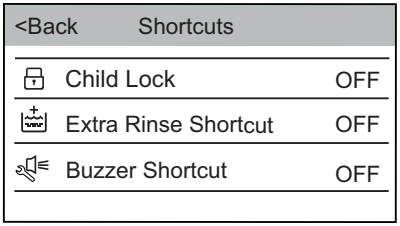

2. Tap on the bar of the desired shortcut/shortcuts by changing the status to **ON**.
3. Tap on **<Back** to return to machine setting list and on **Programmes** to return to summary screen.

The shortcut shows up on bottom.

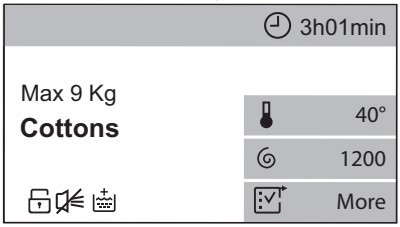

The shortcut appears when the relevant option is set.

14.13 Machine Information

Here you can find a short description about all programmes, options and settings.

To find the desired description, e.g.:

1. Tap on the **Machine Information** bar.
2. Tap on **1. Programmes** bar.
3. Tap on **Cottons** bar and the relevant description will appear.

14.14 DEFAULT Factory Reset

Factory Reset restores the original factory settings.

To return to the factory settings:

1. Tap on the **Factory Reset** bar.

The following window pops up.

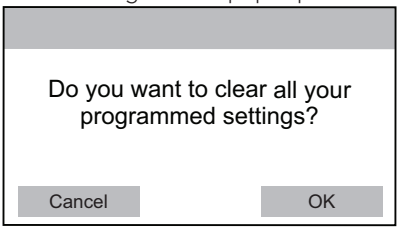

2. Tap on **OK** to return to factory settings or on **Cancel** to keep the current settings.

15. HINTS AND TIPS

WARNING!
Refer to Safety chapters.

15.1 The laundry load

- Divide the laundry into: white, coloured, synthetics, delicates and wool.
- Follow the washing instructions on the laundry care labels.
- Do not wash white and coloured items together.
- Some coloured items can discolour with the first wash. We recommend that you wash them separately for the first couple of times.

- Turn multilayered fabrics, wool and items with printed illustrations inside out.
- Pre-treat tough stains.
- Wash heavy soil stains with a special detergent.
- Be careful with curtains. Remove the hooks and put the curtains in a washing bag or pillowcase.
- Do not wash laundry without hems or with cuts. Use a washing bag to wash small and/or delicate items (e.g. underwired bras, belts, tights, shoelaces, ribbons, etc.).
- A very small load can cause balance problems with the spin phase leading to excessive vibration. If this occurs:
  a. interrupt the programme and open the door (refer to "Daily Use" chapter);
  b. manually redistribute the load so that the items are spaced evenly around the tub;
  c. press the Start/Pause button. The spin phase continues.
- Button up pillowcases, close zippers, hooks and poppers. Tie up belts, cords, shoelaces, ribbons and any other loose elements.
- Empty pockets and unfold the items.

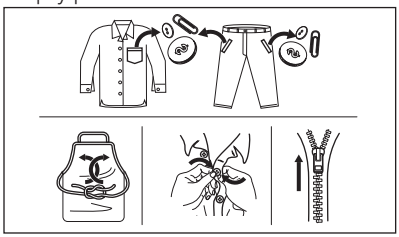

15.2 Stubborn stains

For some stains, water and detergent is not sufficient.

We recommend that you pre-treat these stains before you put the items in the appliance.

Special stain removers are available. Use the special stain remover that is applicable to the type of stain and fabric.

15.3 Detergents and other treatments

- Only use detergents and other treatments specially made for washing machines:
  – powder detergents for all types of fabric, excluding delicate. Prefer powder detergents containing bleach for whites and laundry sanitization
  – liquid detergents, preferably for low temperature wash programmes (60 °C max) for all types of fabric, or special ones for woollens only.
- Do not mix different types of detergents.
- To help the environment, do not use more than the recommended quantity of detergent.
- Follow the instructions that you find on packaging of the detergents or other treatments without exceeding the indicated maximum level (**MAX**).
- Use the recommended detergents for the type and colour of the fabric, the programme temperature and the level of soil.

15.4 Ecological hints

- Set a programme without the prewash phase to wash laundry with normal soil.
- Always start a washing programme with the maximum load of laundry allowed.
- If you pre-treat the stains, you can use a stain remover when you set a programme with a low temperature.
- To use the correct quantity of detergent, refer to the quantity suggested by the detergent producer.

16. CARE AND CLEANING

WARNING!
Refer to Safety chapters.

16.1 External cleaning

Clean the appliance with mild soap and warm water only. Fully dry all the surfaces.

CAUTION!
Do not use alcohol, solvents or chemical products.

CAUTION!
Do not clean the metal surfaces with chlorine-based detergent.

16.2 Descaling

If you use the salt regularly to activate the SoftWater Technology, the descaling procedure described in this paragraph is not necessary.

If the water hardness in your area is high or moderate, we recommend that you use a water descaling product for washing machines.

Regularly examine the drum to check for limescale.

The regular detergents already contain water softening agents, but we recommend to run a cycle with empty drum and a descaling product occasionally.

Always follow the instructions that you find on the packaging of the product.

16.3 Maintenance wash

The repeated and prolonged use of low temperature and short programmes can cause detergent deposits, fluff residues and bacterial growth inside the drum and the tub. This could generate bad odours and mildew.

To eliminate these deposits and hygienize the inner part of the appliance, run a maintenance wash after about 60 cycles, especially when the message **Cleaning cycle recommended** pops up on the display:

1. Remove all laundry from the drum.
2. Run a short cotton programme at high temperature with empty drum and with a small quantity of powder detergent or, if available, run the Machine Clean programme.

If the cleaning programme is postponed, the message keeps on popping up during next uses until it is run.

16.4 Door seal

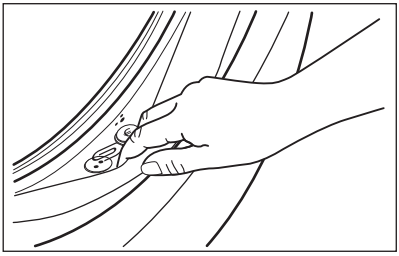

Regularly examine the seal and remove all objects from the inner part.

16.5 Cleaning the drum

Regularly examine the drum to prevent unwanted deposits.
Rust deposits in the drum may occur due to rusting foreign body in the washing or tap water containing iron.

Clean the drum with special products for stainless steel.

Always follow the instructions that you find on the packaging of the product.
Do not clean the drum with acidic descaling products, scouring products containing chlorine or iron or steel.

For a thorough clean:

1. Clean the drum with special products for stainless steel.

Always follow the instructions that you find on the packaging of the product.

2. Run a short cotton programme at high temperature with empty drum and with a small quantity of powder detergent or, if available, run the Machine Clean programme.

16.6 Cleaning the detergent dispenser and the salt compartment

Before cleaning, make sure that the all compartments are empty.

To prevent possible deposits of dried detergent, clotted fabric softener, formation of mould in the dispenser drawer and/or salt fouling in the salt compartment, once in a while carry out the following cleaning procedure:

1. Open the drawer. Press the catch as indicated in the picture and pull the drawer out.

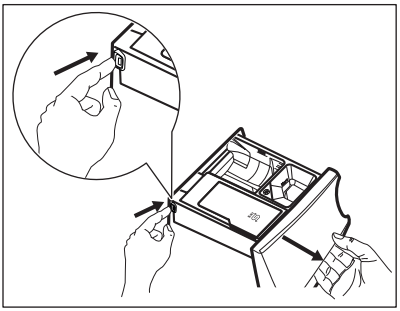

2. Remove the insert for the softener and, if inserted, the container for liquid detergent.

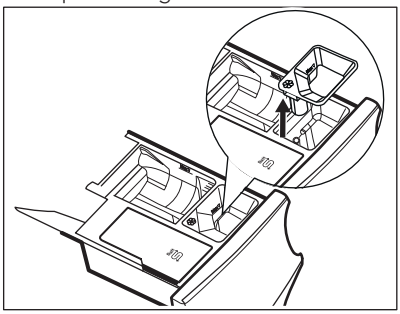

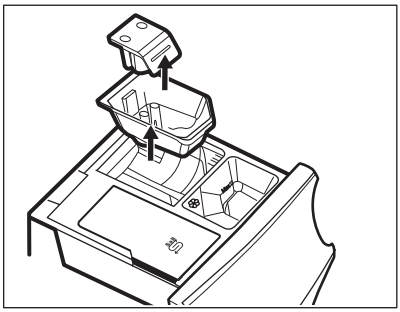

3. Wash the drawer and all inserts under running water.

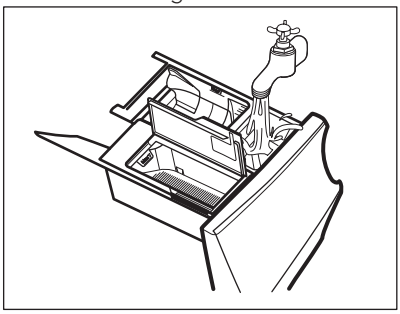

4. Make sure that all detergent residue is removed from the detergent conveyor. Use a cloth.

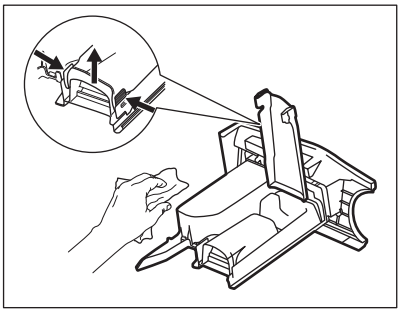

5. Make sure that all detergent residue is removed from the upper and lower part of the recess. Use a small brush to clean the recess.

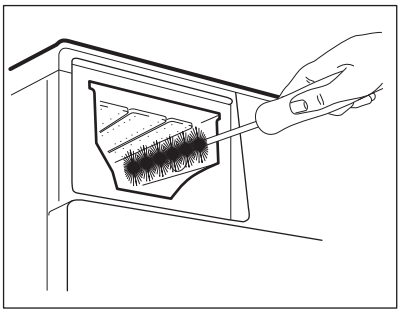

6. Insert the detergent drawer into the guide rails and close it. Run the rinsing programme without any clothes in the drum.

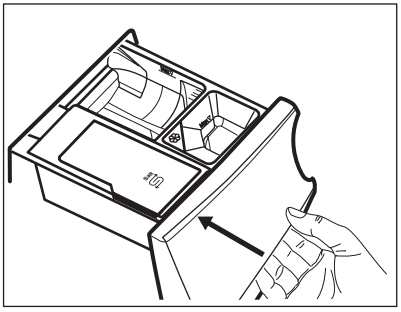

16.7 Cleaning the drain pump

WARNING!
Disconnect the mains plug from the mains socket.

Regularly check the drain pump filter and make sure that it is clean.

Clean the drain pump if:
- The appliance does not drain the water.
- The drum does not turn.
- The appliance makes an unusual noise because of the blockage of the drain pump.
- The message Check that the drain filter is not clogged pops up.

WARNING!
- Do not remove the filter while the appliance operates.
- Do not clean the pump if the water in the appliance is hot. Wait until the water cools down

Proceed as follows to clean the pump:

1. Open the pump cover.

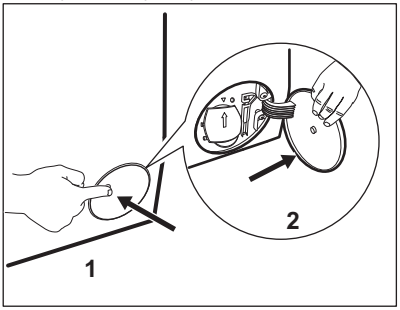

2. Place a suitable bowl below the drain pump access to collect the water that flows out.
3. Open the chute downwards. Always keep a rag nearby to dry up any water spillages when removing the filter.

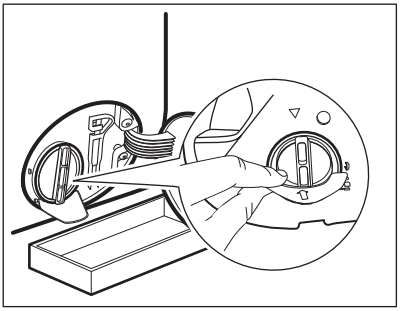

4. Turn the filter 180 degrees in anti-clockwise direction to open it,

without removing. Let the water flow out.

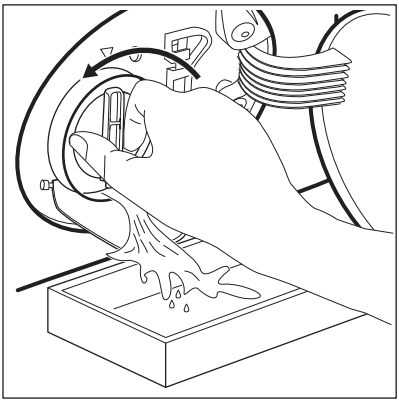

5. When the bowl is full of water, turn the filter back and empty the container.
6. Repeat the steps 4 and 5 until the water stops to flow out.
7. Turn the filter anti-clockwise to remove it.

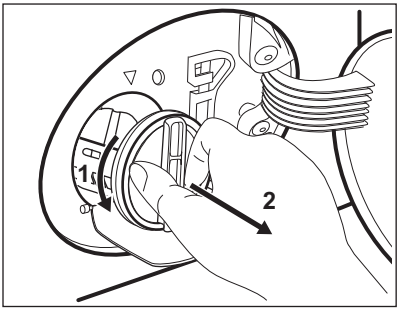

8. If it is necessary, remove fluff and objects from the filter recess.
9. Make sure that the impeller of the pump can rotate. If it does not rotate, contact the Authorised Service Centre.

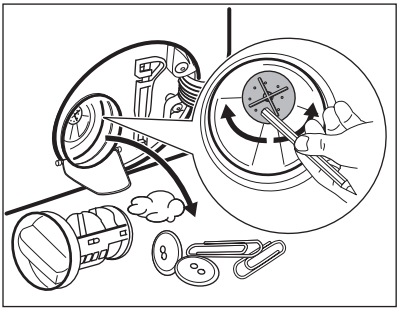

10. Clean the filter under the water tap.

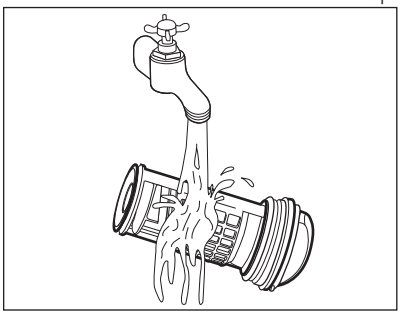

11. Put the filter back into the special guides by turning it clockwise. Make sure that you tighten the filter correctly to prevent leakages.

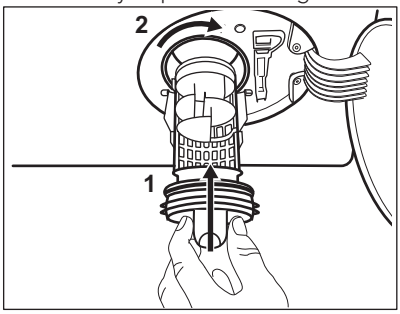

12. Close the pump cover.

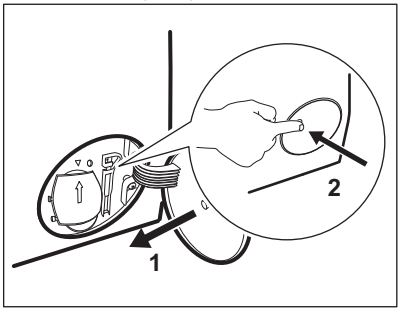

When you drain the water with the emergency drain procedure, you must activate the drain system again:

a. Put 2 litres of water in the main wash compartment of the detergent dispenser.
b. Start the programme to drain the water.

16.8 Cleaning the inlet hose and the valve filter

It is recommended to clean both the filters of the inlet hose and valve occasionally to remove any deposit, collected over the time:

1. Remove the inlet hose from the tap and clean the filter.

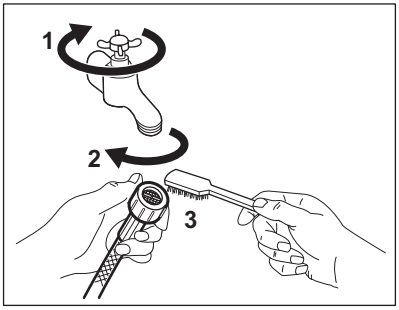

2. Remove the inlet hose from the appliance by loosening the ring nut.

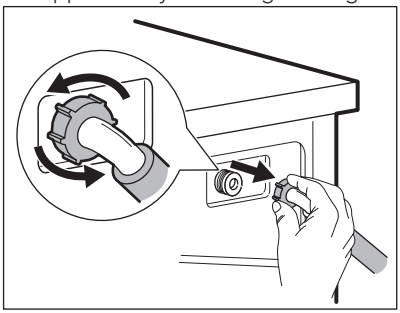

3. Clean the valve filter on the back of the appliance with a toothbrush.

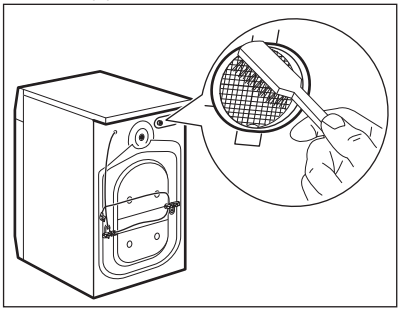

4. When you reconnect the hose to the back of the appliance, turn it left or right (not in vertical position) depending on the position of your water tap.

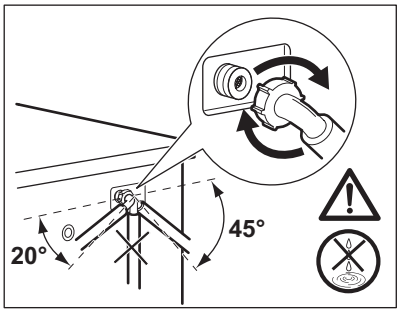

16.9 Emergency drain

If the appliance cannot drain the water, carry out the same procedure, described in 'Cleaning the drain pump' paragraph. If necessary, clean the pump.

When you drain the water with the emergency drain procedure, you must activate the drain system again:

1. Put 2 litres of water in the main wash compartment of the detergent dispenser.
2. Start the programme to drain the water.

16.10 Frost precautions

If the appliance is installed in an area where the temperature can reach the values around 0° C or drop below, remove the remaining water from the inlet hose and the drain pump.

1. Disconnect the mains plug from the mains socket.
2. Close the water tap.
3. Put the two ends of the inlet hose in a container and let the water flow out of the hose.
4. Empty the drain pump. Refer to the emergency drain procedure.
5. When the drain pump is empty, install the inlet hose again.

WARNING!
Make sure that the temperature is higher than 0 °C before you use the appliance again.
The manufacturer is not responsible for damages caused by low temperatures.

17. TROUBLESHOOTING

WARNING!
Refer to Safety chapters.

17.1 Introduction

WARNING!
Deactivate the appliance before carrying out any check.

The appliance does not start or it stops during operation.

First try to find a solution to the problem (refer to the "Possible failures" table). If the problem persists, contact the Authorised Service Centre.

In case of major problems, the buzzer operates, an alarm message pops and the Start/Pause **button may flash continuously, e.g.:**

- **Check that the water inlet tap is open** - The appliance does not fill with water properly.
- **Check that the drain filter is not clogged** - The appliance does not drain the water.
- **Check that the door is properly closed** - The appliance door is open or not closed correctly. Please check the door!

If the appliance is overloaded, remove some items from the drum and/or keep the door pressed while pressing the Start/Pause button until the indicator stops flashing (see the picture below).

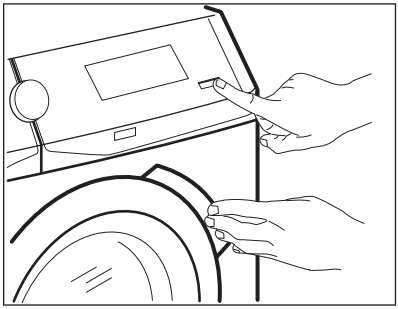

- **Programme will continue when electricity supply is stable** - The mains supply is unstable. Wait until the mains supply is stable.
- **A water leak has been detected** - The anti-flood device is on. Disconnect the appliance and close the water tap. Contact the Authorised Service Centre.
- **Cleaning cycle recommended** - Run the **Machine Clean** programme as described in 'Programmes' chapter. If the cleaning programme is postponed, the message keeps on popping up during next uses until it is run.

If the cleaning programme is postponed, the message keeps on popping up during next uses until it is run.

17.2 Possible failures

Problem	Possible solution
The programme does not start.	• Make sure that the mains plug is connected to the mains socket. • Make sure that the appliance door is closed. • Make sure that there is no damaged fuse in the fuse box. • Make sure that the Start/Pause has been touched. • If the delay start is set, cancel the setting or wait for the end of countdown. • Deactivate the Child Lock function if it is on.
The appliance does not fill with water properly.	• Make sure that the water tap is open. • Make sure that the pressure of the water supply is not too low. For this information, contact your local water authority. • Make sure that the water tap is not clogged. • Make sure that the inlet hose has no kinks, damages or bends. • Make sure that the connection of the water inlet hose is correct. • Make sure that the filter of the inlet hose and the filter of the valve are not clogged. Refer to "Care and cleaning".
The appliance fills with water and drains immediately	• Make sure that the drain hose is in the correct position. The hose may be positioned too low. Refer to "Installation instruction".
The appliance does not drain the water.	• Make sure that the sink spigot is not clogged. • Make sure that the drain hose has no kinks or bends. • Make sure that the drain filter is not clogged. Clean the filter, if necessary. Refer to "Care and cleaning". • Make sure that the connection of the drain hose is correct. • Set the drain programme if you set a programme without drain phase. • Set the drain programme if you set an option which ends with water in the tub.
The spin phase does not operate or the washing cycle lasts longer than usual.	• Set the spin programme. • Make sure that the drain filter is not clogged. Clean the filter, if necessary. Refer to "Care and cleaning". • Adjust manually the items in the tub and start the spin phase again. This problem may be caused by balance problems.
There is water on the floor.	• Make sure that the couplings of the water hoses are tight and there is not water leakages. • Make sure that the water inlet hose and the drain hose have no damages. • Make sure you use the correct detergent and the correct quantity of it.

Problem	Possible solution
You cannot open the appliance door.	• Make sure that a washing programme that ends with water in tub, has been selected. • Make sure that the washing programme is finished. • Set the drain or the spin programme if there is water in the drum. • Make sure that the appliance receives electrical power. • This problem may be caused by a failure of the appliance. Contact the Authorised Service Centre. If you need to open the door, please read carefully "Emergency door opening". • Make sure that the Remote Start Mode is not activated. Deactivate it.
The message "Failed to connect to your WiFi" appears on the screen.	• Check the wireless signal. • Check your home network and router. • Restart the router. • Contact your wireless service provider if there are further problems with the wireless network.
The App cannot connect to the appliance.	• Check the wireless signal. • Check if your smart device is connected to the wireless network. • Check your home network and router. • Restart the router. • Contact your wireless service provider if there are problems with the wireless network. • The appliance, the smart device, or both, need to be configured again because a new router has been installed or the router configuration has been changed.
The App cannot frequently connect to the appliance.	• Make sure that the wireless signal reaches the appliance. Try to move the home router as near the appliance as possible or consider purchasing a wireless range extender. • Make sure the wireless signal is not disrupted by microwave. Turn the microwave off. Avoid using the microwave and the remote control at the same time.
The appliance makes an unusual noise and vibrates.	• Make sure the levelling of the appliance is correct. Refer to "Installation instruction". • Make sure that the packaging and/or the transit bolts are removed. Refer to "Installation instruction". • Add more laundry in the drum. The load may be too small.
The programme duration increases or decreases during programme execution.	• The ProSense function is able to adjust the programme duration according to the type and the laundry load size. Refer to "The ProSense load detection" in "Daily Use" chapter.

Problem	Possible solution
The washing results are not satisfactory.	• Increase the detergent quantity or use a different detergent. • Use special products to remove the stubborn stains before you wash the laundry. • Make sure that you set the correct temperature. • Decrease the laundry load. • Make sure that no other type of detergent has been poured the compartment Salt. In this case, refer to "Eliminating detergent or other additives from salt compartment'. • Make sure that no salt has been poured in the compartment III. If it happens, run a rinse cycle or run the washing cycle again.
Too much foam in the drum during the washing cycle.	• Reduce the quantity of detergent.
Excessive consumption of salt.	• Check if the water softener has been set to act also during rinse phase. Refer to "How to set the water hardness level" in "The Water Softener (Soft Water)" chapter.
Salt is not consumed.	• The appliance may need a water softener regeneration: run a long cycle without reducing time. Refer to "Water softener regeneration" in "The Water Softener (Soft Water)" chapter.
The drum is empty and the display shows there is some weight in.	• Press the On/Off button to deactivate the appliance and activate it again to set a tare.
The drum is full but the display shows 0.0 kg.	• You loaded the laundry before activating the appliance. Press the On/Off button to deactivate the appliance. • Empty the drum and follow the necessary steps. (Refer to "Loading the laundry")

After the check, activate the appliance. The programme continues from the point of interruption.
If the problem occurs again, contact the Authorised Service Centre.
If the display shows other alarm codes. Deactivate and activate the appliance. If the problem continues, contact the Authorised Service Centre.

17.3 Emergency door opening

In case of power failure or functioning failure the appliance door remains locked. The washing programme continues when the power is restored. If the door remains locked in case of failure, it is possible to open it using the emergency unlock function.

Before opening the door:

CAUTION!
Risk of burns! Make sure that the water temperature is not too high and the laundry is not hot. If necessary, wait until they cool down.

CAUTION!
Risk of injury! Make sure that the drum is not rotating. If necessary, wait until the drum stops rotating.

Make sure that the water level inside the drum is not too high. If necessary, proceed with an emergency drain (refer to «Emergency drain» in «Care and cleaning» chapter).

To open the door, proceed as follows:

1. Press the On/Off button to switch the appliance off.
2. Disconnect the mains plug from the mains socket.
3. Open the filter flap.
4. Pull the emergency unlock trigger downward once. Pull it downward once again, keep it tensed and, in the meanwhile, open the appliance door.

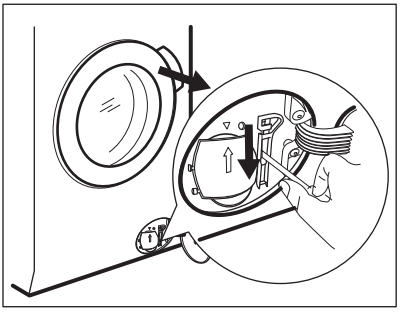

5. Take out the laundry and then close the appliance door.
6. Close the filter flap.

17.4 Eliminating detergent or other additives from salt compartment Salt

Any type of detergent and additives inadvertently poured in the compartment Salt must be eliminated completely.

If this happens, please proceed as follows:

1. Pull the drawer out.

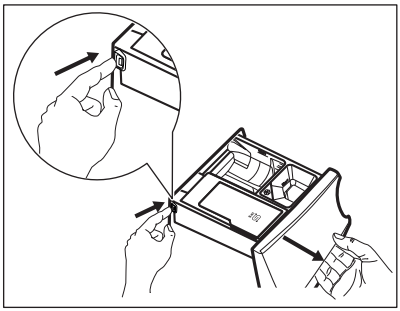

2. Eliminate any trace of detergent or additive and clean the compartment thoroughly.
3. Insert the drawer back and pour salt in the compartment Salt.
4. Close the drawer.
5. Run a cotton or synthetic cycle, without reducing time, to restore the water softener function.

18. CONSUMPTION VALUES

Stated values are obtained in laboratory conditions with relevant standards. Different causes can change the data: the quantity and type of laundry and ambient temperature. Water pressure, the supply voltage and the temperature of inlet water may also affect the washing programme duration.

Technical specifications may be changed without prior notice to improve the quality of product.

During the washing programme, the Prosense technology can vary the wash duration and the consumption values. For more details see 'The Prosense load detection' paragraph in 'Daily Use' chapter.

Programmes	Load (kg)	Energy consumption (kWh)	Water consumption (litre)	Approximate programme duration (minutes)	Remaining moisture (%)[1]
Cottons 60°C	9	1.65	90	220	44
Cottons 40°C	9	1.20	90	210	44
Synthetics 40°C	4	0.72	55	160	35
Delicates 40°C	4	0.60	60	120	35
Wool/Silk 30°C	2	0.35	58	60	30
Standard cotton programmes[2]					
Standard 60°C cotton	9	0.33	54	268	44
Standard 60°C cotton	4.5	0.30	40	247	44
Standard 40°C cotton	4.5	0.31	40	234	44

[1] At the end of spin phase.

[2] The performance results and low energy consumption are guaranteed by the use of softened water. To maintain this achievement over time, it is essential to set the right water hardness level by following the user manual instructions and use salt regularly for regenerating the resins .

Off Mode (W)	0.30
Left On Mode (W)	0.30
Power consumption in networked standby (W)	2.00
Time to networked standby (min.)	15

The information given in the chart above is compliant with the EU Commission regulation 1015/2010 implementing directive 2009/125/EC and EU commission regulation No. 1275/2008.

19. TECHNICAL DATA

Dimension	Width/ Height/ Depth/ Total depth	600 mm/ 850 mm/ 630 mm/ 660 mm

Electrical connection	Voltage Overall power Fuse Frequency	230-240 V 2200 W 13 A 50 Hz
Level of protection against ingress of solid particles and moisture ensured by the protective cover, except where the low voltage equipment has no protection against moisture		IPX4
Water supply pressure **1)**	Minimum Maximum	0.5 bar (0.05 MPa) 8 bar (0.8 MPa)
Water supply **2)**		Cold water
Maximum Load	Cotton	9 kg
Energy Efficiency Class		A+++
Spin Speed	Maximum spin speed	1551 rpm

1) The appliance works correctly if the water pressure is not lower than 0.05 MPa (0.5 bar). If you cannot connect the water inlet hose to the cold water tap of the primary hydraulic system, connect it to your domestic cold water storage system. Make sure not to exceed a distance of 5.02 m (16.5 ft) between the appliance inlet hose and the bottom of the water storage tank.

2) Connect the water inlet hose to a water tap with a 3/4'' thread.

20. ACCESSORIES

20.1 Available in www.aeg.com/shop or from authorised dealer

Only appropriate accessories approved by AEG ensure the safety standards of the appliance. If unapproved parts are used, any claims will be invalidated.

20.2 Fixing plate kit

If you install the appliance on a plinth, secure the appliance with the fixing plates.

Read carefully the instructions supplied with the accessory.

20.3 Stacking kit

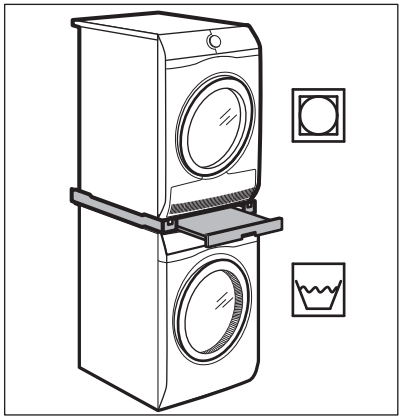

The tumble dryer can be stacked on the top of the washing machine **only by using the correct stacking kit manufactured and approved by AEG**.

Verify the compatible stacking kit by checking the depth of your appliances.

The stacking kit can be used only with the appliances specified in the leaflet provided with the accessory.

Read carefully the instructions supplied with the appliance and with the accessory.

WARNING!
Do not put the tumble dryer under the washing machine.

20.4 Pedestal with the drawer

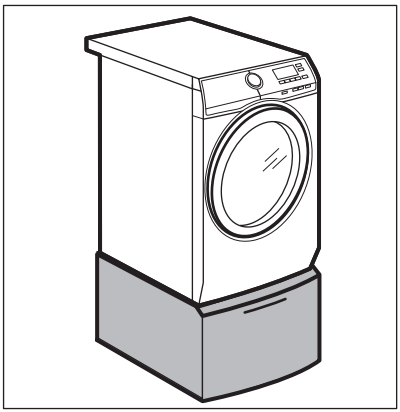

To raise your appliance and make loading and unloading laundry easier.

The drawer can be used for laundry storage e.g.: towels, cleaning products and more.

Read carefully the instructions supplied with the accessory.

21. PRODUCT INFORMATION SHEET IN REFERENCE TO E.U. REGULATION 1369/2017

Product Information Sheet	
Trade Mark	AEG
Model	L9FEA966C, PNC914550924
Rated capacity in kg	9
Energy efficiency class	A+++
Energy consumption in kWh per year, based on 220 standard washing cycles for cotton programmes at 60 °C and 40 °C at full and partial load, and the consumption of the low-power modes. Actual energy consumption will depend on how the appliance is used.	76.0

Energy consumption of the standard 60°C cotton programme at full load in kWh	0.33
Energy consumption of the standard 60°C cotton programme at partial load in kWh	0.30
Energy consumption of the standard 40°C cotton programme at partial load kWh	0.31
Power consumption of the off-mode in W	0.30
Power consumption in left-on mode in W	0.30
Water consumption in litres per year, based on 220 standard washing cycles for cotton programmes at 60 °C and 40 °C at full and partial load. Actual water consumption will depend on how the appliance is used.	10499
Spin-drying efficiency class on a scale from G (least efficient) to A (most efficient)	A
Maximum spin speed in rpm	1551
Remaining moisture content in %	44
The 'standard 60 °C cotton programme' and the 'standard 40 °C cotton programme' are the standard washing programmes to which the information in the label and the fiche relates, these programmes are suitable to clean normally soiled cotton laundry and they are the most efficient in terms of combined energy and water consumption.	-
Programme time of the standard 60°C cotton programme at full load in minutes	268
Programme time of the standard 60°C cotton programme at partial load in minutes	247
Programme time of the "standard 40°C cotton programme at partial load in minutes	234
Duration of the left on mode in minutes	5
Airborne acoustical noise emission in db(A) washing	47
Airborne acoustical noise emission in db(A) spinning	75
Built in appliance Y/N	No

The information given in the chart above is compliant with the EU Commission regulation 1015/2010 implementing directive 2009/125/EC .

22. ENVIRONMENTAL CONCERNS

Recycle materials with the symbol ♺. Put the packaging in relevant containers to recycle it. Help protect the environment and human health by

recycling waste of electrical and electronic appliances. Do not dispose of appliances marked with the symbol with the household waste. Return the product to your local recycling facility or contact your municipal office.

www.aeg.com/shop

157011556-A-402019

CE

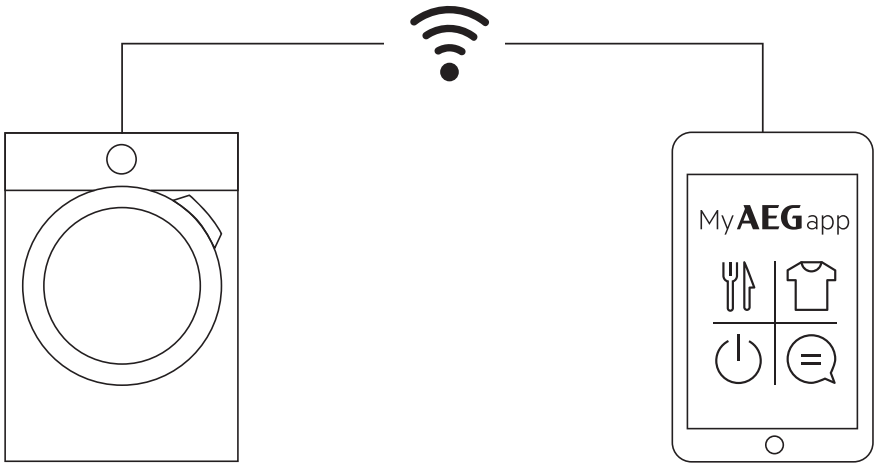

aeg.com/app

vailable on the App Store

GET IT ON Google Play

The software included in this product contains copyrighted software that is licensed under the BSD, GPL-2.0, LGPL-2.0, LGPL-2.1, zLib, MIT, ISC, Apache 2.0 and others. It is possible to display the complete copy of the licenses in the AEG App that can be downloaded from the corresponding App store from the License menu section. It is possible to download the source code of the open source software used in the product by searching for Wi-Fi Module Software version in NIUX subfolder at the following website: **http://aeg.opensoftwarerepository.com**.

AEG