CGB6133CCM

EN **User Manual**
Cooker

USER MANUAL

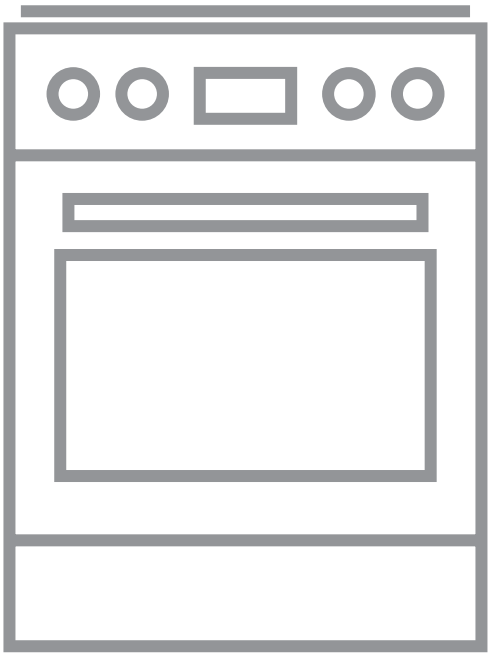

AEG

CONTENTS

1. SAFETY INFORMATION....2
2. SAFETY INSTRUCTIONS....5
3. PRODUCT DESCRIPTION....8
4. BEFORE FIRST USE....9
5. HOB - DAILY USE....9
6. HOB - HINTS AND TIPS....11
7. HOB - CARE AND CLEANING....12
8. OVEN - DAILY USE....12
9. OVEN - CLOCK FUNCTIONS....15
10. OVEN - HINTS AND TIPS....16
11. OVEN - CARE AND CLEANING....21
12. TROUBLESHOOTING....23
13. INSTALLATION....24
14. ENERGY EFFICIENCY....28

FOR PERFECT RESULTS

Thank you for choosing this AEG product. We have created it to give you impeccable performance for many years, with innovative technologies that help make life simpler features you might not find on ordinary appliances. Please spend a few minutes reading to get the very best from it.
Visit our website for:

Get usage advice, brochures, trouble shooter, service information:
www.aeg.com/webselfservice

Register your product for better service:
www.registeraeg.com

Buy Accessories, Consumables and Original spare parts for your appliance:
www.aeg.com/shop

CUSTOMER CARE AND SERVICE

Always use original spare parts.
When contacting our Authorised Service Centre, ensure that you have the following data available: Model, PNC, Serial Number.
The information can be found on the rating plate.

⚠ Warning / Caution-Safety information

ⓘ General information and tips

Environmental information

Subject to change without notice.

1. ⚠ SAFETY INFORMATION

Before the installation and use of the appliance, carefully read the supplied instructions. The

manufacturer is not responsible for any injuries or damages that are the result of incorrect installation or usage. Always keep the instructions in a safe and accessible location for future reference.

1.1 Children and vulnerable people safety

WARNING!
Risk of suffocation, injury or permanent disability.

- This appliance can be used by children aged from 8 years and above and persons with reduced physical, sensory or mental capabilities or lack of experience and knowledge if they have been given supervision or instruction concerning the use of the appliance in a safe way and understand the hazards involved.
- Children between 3 and 8 years of age and persons with very extensive and complex disabilities shall be kept away from the appliance unless continuously supervised.
- Children of less than 3 years of age should be kept away from the appliance unless continuously supervised.
- Do not let children play with the appliance.
- Keep all packaging away from children and dispose of it appropriately.
- Keep children and pets away from the appliance when it operates or when it cools down. Accessible parts are hot.
- Children shall not carry out cleaning and user maintenance of the appliance without supervision.

1.2 General Safety

- Only a qualified person must install this appliance and replace the cable.
- This appliance is intended for use up to an altitude of 2000 m above sea level.

- This appliance is not intended to be used on ships, boats or vessels.
- Do not install the appliance behind a decorative door in order to avoid overheating.
- Do not install the appliance on a platform.
- Do not operate the appliance by means of an external timer or separate remote-control system.
- WARNING: Unattended cooking on a hob with fat or oil can be dangerous and may result in fire.
- NEVER try to extinguish a fire with water, but switch off the appliance and then cover flame e.g. with a lid or a fire blanket.
- CAUTION: The cooking process has to be supervised. A short term cooking process has to be supervised continuously.
- WARNING: Danger of fire: Do not store items on the cooking surfaces.
- Do not use a steam cleaner to clean the appliance.
- Do not use harsh abrasive cleaners or sharp metal scrapers to clean the glass door or the glass of hinged lids of the hob since they can scratch the surface, which may result in shattering of the glass.
- Metallic objects such as knives, forks, spoons and lids should not be placed on the hob surface since they can get hot.
- Remove any spillage from the lid before opening. Let the hob surface cool down before closing the lid.
- WARNING: The appliance and its accessible parts become hot during use. Care should be taken to avoid touching heating elements.
- Always use oven gloves to remove or put in accessories or ovenware.
- Before maintenance, cut the power supply.
- Ensure that the appliance is switched off before replacing the lamp to avoid the possibility of electric shock.
- If the mains power supply cable is damaged, it must be replaced by the manufacturer, its Authorised

Service Centre or similarly qualified persons to avoid an electrical hazard.
- To remove the shelf supports first pull the front of the shelf support and then the rear end away from the side walls. Install the shelf supports in the opposite sequence.
- WARNING: Use only hob guards designed by the manufacturer of the cooking appliance or indicated by the manufacturer of the appliance in the instructions for use as suitable or hob guards incorporated in the appliance. The use of inappropriate guards can cause accidents.

2. SAFETY INSTRUCTIONS

This appliance is suitable for the following markets: GB IE

2.1 Installation

WARNING!
Only a qualified person must install this appliance.

- Remove all the packaging.
- Do not install or use a damaged appliance.
- Follow the installation instructions supplied with the appliance.
- Always take care when moving the appliance as it is heavy. Always use safety gloves and enclosed footwear.
- Do not pull the appliance by the handle.
- The kitchen cabinet and the recess must have suitable dimensions.
- Keep the minimum distance from other appliances and units.
- Install the appliance in a safe and suitable place that meets installation requirements.
- Parts of the appliance carry current. Close the appliance with furniture to prevent touching the dangerous parts.
- The sides of the appliance must stay next to appliances or units with the same height.
- Do not install the appliance adjacent to a door or under a window. This prevents hot cookware to fall from the appliance when the door or the window is opened.
- Make sure to install a stabilizing means in order to prevent tipping of the appliance. Refer to Installation chapter.

2.2 Electrical Connection

WARNING!
Risk of fire and electric shock.

- All electrical connections should be made by a qualified electrician.
- The appliance must be earthed.
- Make sure that the parameters on the rating plate are compatible with the electrical ratings of the mains power supply.
- Always use a correctly installed shockproof socket.
- Do not use multi-plug adapters and extension cables.
- Do not let mains cables touch or come near the appliance door or the niche below the appliance, especially when it operates or the door is hot.
- The shock protection of live and insulated parts must be fastened in such a way that it cannot be removed without tools.
- Connect the mains plug to the mains socket only at the end of the

installation. Make sure that there is access to the mains plug after the installation.
- If the mains socket is loose, do not connect the mains plug.
- Do not pull the mains cable to disconnect the appliance. Always pull the mains plug.
- Use only correct isolation devices: line protecting cut-outs, fuses (screw type fuses removed from the holder), earth leakage trips and contactors.
- The electrical installation must have an isolation device which lets you disconnect the appliance from the mains at all poles. The isolation device must have a contact opening width of minimum 3 mm.
- Fully close the appliance door before you connect the mains plug to the mains socket.

2.3 Gas connection

- All gas connections should be made by a qualified person.
- Before installation, make sure that the local distribution conditions (nature of the gas and gas pressure) and the adjustment of the appliance are compatible.
- Make sure that there is air circulation around the appliance.
- The information about the gas supply is on the rating plate.
- This appliance is not connected to a device, which evacuates the products of combustion. Make sure to connect the appliance according to current installation regulations. Pay attention to requirements regarding adequate ventilation.

2.4 Use

WARNING!
Risk of injury and burns.
Risk of electrical shock.

- This appliance is for household use only.
- Do not change the specification of this appliance.
- Make sure that the ventilation openings are not blocked.
- Do not let the appliance stay unattended during operation.
- Deactivate the appliance after each use.
- Be careful when you open the appliance door while the appliance is in operation. Hot air can release.
- Do not operate the appliance with wet hands or when it has contact with water.
- Do not use the appliance as a work surface or as a storage surface.

WARNING!
Risk of fire and explosion

- Fats and oil when heated can release flammable vapours. Keep flames or heated objects away from fats and oils when you cook with them.
- The vapours that very hot oil releases can cause spontaneous combustion.
- Used oil, that can contain food remnants, can cause fire at a lower temperature than oil used for the first time.
- Do not put flammable products or items that are wet with flammable products in, near or on the appliance.
- Do not let sparks or open flames to come in contact with the appliance when you open the door.
- Open the appliance door carefully. The use of ingredients with alcohol can cause a mixture of alcohol and air.

WARNING!
Risk of damage to the appliance.

- To prevent damage or discoloration to the enamel:
  - do not put ovenware or other objects in the appliance directly on the bottom.
  - do not put aluminium foil on the appliance or directly on the bottom of cavity.
  - do not put water directly into the hot appliance.
  - do not keep moist dishes and food in the appliance after you finish the cooking.
  - be careful when you remove or install the accessories.
- Discoloration of the enamel or stainless steel has no effect on the performance of the appliance.

- Use a deep pan for moist cakes. Fruit juices cause stains that can be permanent.
- Do not keep hot cookware on the control panel.
- Do not let cookware boil dry.
- Be careful not to let objects or cookware fall on the appliance. The surface can be damaged.
- Do not activate the cooking zones with empty cookware or without cookware.
- Cookware made of cast iron, aluminium or with a damaged bottom can cause scratches. Always lift these objects up when you have to move them on the cooking surface.
- Provide good ventilation in the room where the appliance is installed.
- Use only stable cookware with the correct shape and diameter larger than the dimensions of the burners.
- Make sure the flame does not go out when you quickly turn the knob from the maximum to the minimum position.
- Use only the accessories supplied with the appliance.
- Do not install a flame diffuser on the burner.
- This appliance is for cooking purposes only. It must not be used for other purposes, for example room heating.

2.5 Care and Cleaning

WARNING!
Risk of injury, fire, or damage to the appliance.

- Before maintenance, deactivate the appliance.
  Disconnect the mains plug from the mains socket.
- Make sure the appliance is cold. There is the risk that the glass panels can break.
- Replace immediately the door glass panels when they are damaged. Contact the Authorised Service Centre.
- Be careful when you remove the door from the appliance. The door is heavy!
- Fat and food remaining in the appliance can cause fire.
- Clean regularly the appliance to prevent the deterioration of the surface material.
- Make sure the cavity and the door are wiped dry after each use. Steam produced during the operation of the appliance condensates on cavity walls and can cause corrosion. To decrease the condensation operate the appliance for 10 minutes before cooking.
- Clean the appliance with a moist soft cloth. Only use neutral detergents. Do not use any abrasive products, abrasive cleaning pads, solvents or metal objects.
- If you use an oven spray, obey the safety instructions on the packaging.
- Do not clean the catalytic enamel (if applicable) with any kind of detergent.
- Do not clean the burners in the dishwasher.

2.6 Lid

- Do not change the specification of the lid.
- Clean the lid regularly.
- Do not open the lid, when there are spills on the surface.
- Before you close the lid turn all burners off.
- Do not close the lid until the hob and oven are completely cold.
- Glass lid can shatter, when heated (if applicable).



2.7 Internal lighting

WARNING!
Risk of electric shock.

- The type of light bulb or halogen lamp used for this appliance is for household appliances only. Do not use it for house lighting.

- Before replacing the lamp, disconnect the appliance from the power supply.
- Only use lamps with the same specifications.

2.8 Service

- To repair the appliance contact the Authorised Service Centre.
- Use original spare parts only.

2.9 Disposal

WARNING!
Risk of injury or suffocation.

- Contact your municipal authority for information on how to discard the appliance correctly.
- Disconnect the appliance from the mains supply.
- Cut off the mains electrical cable close to the appliance and dispose of it.
- Remove the door catch to prevent children or pets from becoming trapped in the appliance.
- Flat the external gas pipes.

3. PRODUCT DESCRIPTION

3.1 General overview

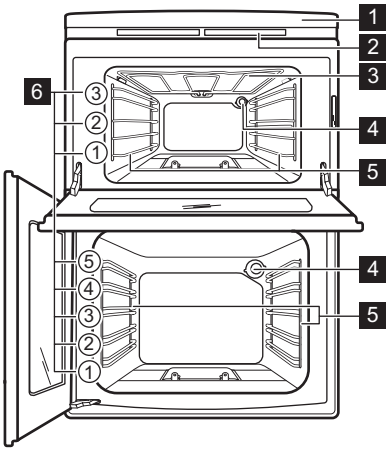

1 Control panel and hob
2 Air vents for the cooling fan
3 Grill
4 Lamp
5 Shelf support, removable
6 Shelf positions

3.2 Cooking surface layout

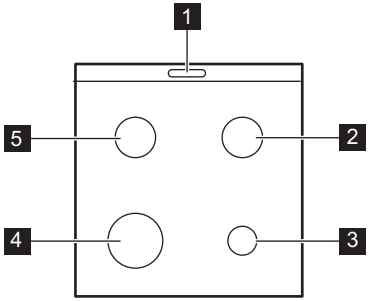

1 Steam outlet - number and position depend on the model
2 Semi-rapid burner
3 Auxiliary burner
4 Rapid burner
5 Semi-rapid burner

3.3 Cooker control panel

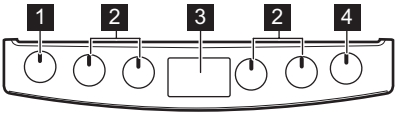

1 Knob for the top oven
2 Knobs for the hob
3 Display
4 Knob for the main oven

3.4 Accessories

- **Wire shelf**
  For cookware, cake tins, roasts.
- **Grill- / Roasting pan**
  To bake and roast or as pan to collect fat.
- **Trivet**
  For roasting and grilling.

Use the trivet only with the Grill- / roasting pan.

4. BEFORE FIRST USE

WARNING!
Refer to Safety chapters.

4.1 Initial Cleaning

Remove all accessories and removable shelf supports from the oven.

Refer to "Care and cleaning" chapter.

Clean the oven and the accessories before the first use.
Put the accessories and the removable shelf supports back to their initial position.

4.2 Setting and changing the time

You must set the time before you operate the oven.

When you connect the appliance to the electrical supply or after a power cut, flashes.

Press the + or − to set the correct time.

After approximately 5 seconds, the flashing stops and the display shows the time of day.

To change the time, press again and again until starts to flash.

4.3 Preheating

Preheat the empty appliance before first use.

Preheat the two ovens. Heat up one oven at a time.

1. Set the maximum temperature.
2. Let the appliance operate for 1 hour.
3. Set the function .
4. Let the appliance operate for 15 minutes.

Accessories can become hotter than usual. The appliance can emit an odour and smoke. This is normal. Make sure that the airflow is sufficient.

5. HOB - DAILY USE

WARNING!
Refer to Safety chapters.

5.1 Ignition of the hob burners

Always light the burner before you put on the cookware.

WARNING!
Be very careful when you use open fire in the kitchen environment. The manufacturer declines any responsibility in case of the flame misuse.

1. Turn the knob for the hob to the position ☆ and push it down. When you push the knob, the spark generator activates automatically.
2. Keep the knob for the hob pushed for equal or less than 10 seconds to let the thermocouple warm up. If not, the gas supply is interrupted.
3. Adjust the flame after it is regular.

WARNING!
Do not keep the knob pushed for more than 10 seconds. If the burner does not light after 10 seconds, release the knob, turn it into the off position and try to light the burner again after minimum 1 minute.

If after some tries the burner does not light, check if the crown and its cap are in the correct position.

In the absence of electricity you can ignite the burner without an electrical device. In this case approach the burner with a flame, push the relevant knob down and turn it to maximum position. Keep the knob pushed for equal or less than 10 seconds to let the thermocouple warm up.

If the burner accidentally goes out, turn the knob to the off position and try to light the burner again after minimum 1 minute.

The spark generator can start automatically when you switch on the mains, after installation or a power cut. It is normal.

5.2 Burner overview

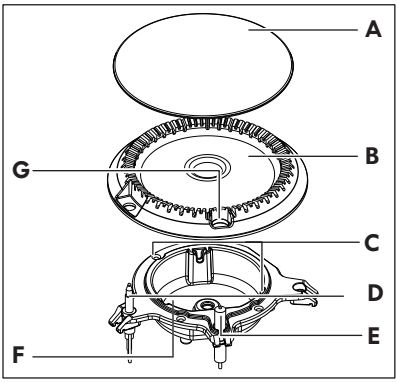

A. Burner cap
B. Burner crown
C. Slots
D. Thermocouple
E. Ignition candle
F. Burner body
G. Hole for the ignition candle

5.3 Replacing burner parts

1. Put carefully the burner crown on the burner body. Let the crown fall freely onto the body. Do not use force.
   Make sure that the hole in the crown is above the ignition candle.
   Make sure that the location pegs are in the slots in the burner body.
   Make sure that you can move the crown a small distance from side to side.
2. Put the burner cap centrally on top of the crown.
   Make sure that the cap is correctly installed, with the enamel side up and you can move the cap from side to side and front to back.
3. Light the burner.

If the burner does not ignite, adjust the crown and cap again.

5.4 Turning the burner off

To put the flame out, turn the knob to the off position **0** .

WARNING!
Always turn the flame down or switch it off before you remove the pans from the burner.

5.5 Lid Safety Device

Lid has safety device, which cuts off the gas supply for the hob. Closing the lid activates the safety device.

WARNING!
Always use the knob for the hob to switch off a burner. Do not use the lid as a cut-off device.

6. HOB - HINTS AND TIPS

WARNING!
Refer to Safety chapters.

6.1 Cookware

WARNING!
Do not put unstable or damaged pots on the burner to prevent spills and injuries.

CAUTION!
Make sure that pot handles are not above the front edge of the cooktop.

CAUTION!
Make sure that the pots are placed centrally on the burner in order to get the maximum stability and a lower gas consumption.

6.2 Diameters of cookware

WARNING!
Use cookware with diameters applicable to the size of burners.

Burner	Diameter of cookware (mm)
Rapid	180 - 240 / 260[1)]
Semi-rapid	120 - 220 / 240
Auxiliary	80 - 160

[1)] When a single pot is used on the hob

7. HOB - CARE AND CLEANING

WARNING!
Refer to Safety chapters.

7.1 General information

- Clean the hob after each use.
- Always use cookware with a clean base.
- Scratches or dark stains on the surface have no effect on how the hob operates.
- Use a special cleaner suitable for the surface of the hob.
- Wash stainless steel parts with water, and then dry them with a soft cloth.

7.2 Pan supports

The pan supports are not resistant to washing in a dishwasher. They must be washed by hand.

1. Remove the pan supports to easily clean the hob.

Be very careful when you replace the pan supports to prevent the hob top from damage.

2. After you clean the pan supports, make sure that they are in correct positions.
3. For the burner to operate correctly, make sure that the arms of the pan supports are aligned with the centre of the burner.

7.3 Cleaning the hob

- **Remove immediately:** melted plastic, plastic foil, sugar and food with sugar, otherwise, the dirt can cause damage to the hob. Take care to avoid burns.
- **Remove when the hob is sufficiently cool:** limescale rings, water rings, fat stains, shiny metallic discoloration. Clean the hob with a moist cloth and a non-abrasive detergent. After cleaning, wipe the hob dry with a soft cloth.

7.4 Cleaning the spark plug

This feature is obtained through a ceramic ignition candle with a metal electrode. Keep these components well clean to prevent difficult lighting and check that the burner crown holes are not obstructed.

8. OVEN - DAILY USE

WARNING!
Refer to Safety chapters.

8.1 Top Oven Functions

Oven function		Application
0	Off position	The oven is off.
	Full Grill	To grill flat food and to toast bread. When the function is active, the lamp turns on.
1 - 8 [1)]	Heat settings	Heat settings for Conventional Cooking.
	Ignition	To activate the top oven.

1) 1 - 155 °C, 2 - 170°C, 3 - 185°C, 4 -200°C, 5 - 220°C, 6 - 250°C, 7 - 275°C, 8 - 295°C

8.2 Main Oven Functions

Oven function		Application
0	Off position	The oven is off.
↓°C	Minimum temperature	To set the minimum temperature.
1 - 8[1)]	Heat settings	Heat settings for Conventional Cooking.
✳	Ignition	To activate the main oven.

[1)] min - 130 °C, 1 - 155°C, 2 - 170°C, 3 -185°C, 4 - 205°C, 5 - 225°C, 6 - 240°C, 7 - 255°C, 8 - 260°C

8.3 Igniting the oven burners

CAUTION!
When the oven is active, the lid has to be opened to avoid over-heating.
Keep the oven door open when you ignite the burner.

Oven safety device:
The oven burners have a thermocouple. It stops the gas flow, if the flame goes out.

You cannot operate the top oven burner, when the grill is active.

1. Open the oven door.
2. Push the knob for the main oven and turn it counterclockwise to ✳ to ignite the main oven burner.
   - Push the knob for the top oven and turn it counterclockwise to ✳ to ignite the top oven burner.
3. Keep the knob pushed for equal or less than 15 seconds to let the thermocouple warm up. If not, the gas flow is interrupted.
4. After ignition release the knob, close the oven door and turn the knob to set the necessary heat setting.

WARNING!
Do not push the knob for more than 15 seconds. If the oven burner does not light after 15 seconds, release the knob, turn it back to off position and try to light the oven burner again after minimum 1 minute.

CAUTION!
In the absence of electricity you can ignite the oven burner without an electrical device. In this case open the oven door, put the flame near the hole in the bottom of the oven cavity, turn the knob to the spark position and push it down. Keep the knob for the oven functions pushed for equal or less than 15 seconds to let the thermocouple warm up.

If the oven burner accidentally goes out, turn the knob for the oven functions to the off position and try to light the burner again after minimum 1 minute.
Check if the burner holes are not blocked.

8.4 Turning off the oven burners

To put out the flame, turn the knob to the off position.

8.5 Using the grill

1. Turn the knob for the oven functions clockwise to
2. Adjust the deep pan runner position to fit in different portions of food.

Refer to Grilling in "Hints and Tips" chapter.

8.6 Cooling fan

When the oven operates, the cooling fan turns on automatically to keep the surfaces of the oven cool. If you turn off the oven, the cooling fan can continue to operate until the oven cools down.

If there is a defect in the cooling fan, contact the Authorised Service Centre.

8.7 Inserting the oven accessories

Deep pan:

Do not use the deep pan on the first shelf position in the main oven.

Push the deep pan between the guide bars of the shelf support.

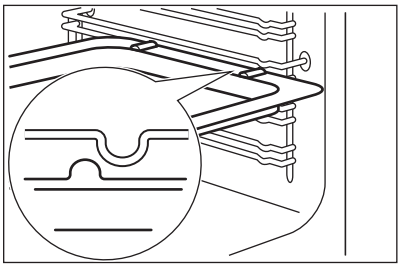

Wire shelf and the deep pan together:

Push the deep pan between the guide bars of the shelf support and the wire shelf on the guide bars above.

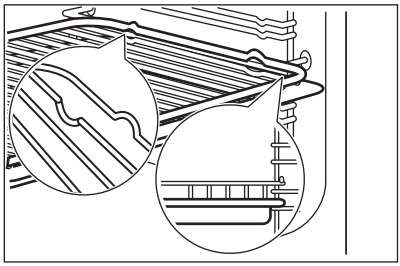

- All accessories have small indentations at the top of the right and left side to increase safety. The indentations are also anti-tip devices.
- The high rim around the shelf is a device which prevents cookware from slipping.

8.8 Trivet and Grill- / Roasting pan

WARNING!
Be careful when you remove the accessories from a hot oven. There is a risk of burns.

You can use the trivet to roast larger pieces of meat or poultry on one shelf position.

1. Put the trivet into the deep pan so that the supports of the wire shelf point up.

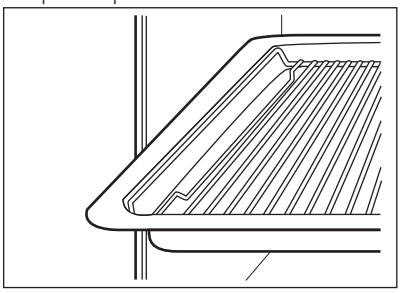

2. Put the deep pan into the oven on the necessary shelf position.

You can use the trivet to grill flat dishes in large quantities and to toast.

1. Put the trivet into the deep pan so that the supports of the wire shelf point down.

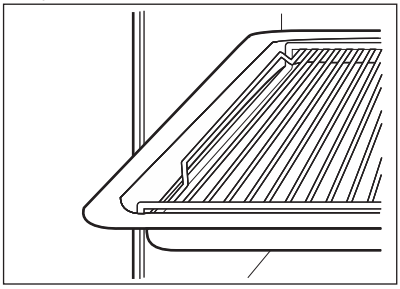

2. Put the deep pan into the oven on the necessary shelf position.

9. OVEN - CLOCK FUNCTIONS

9.1 Display

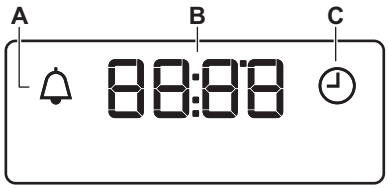

A. Minute minder indicator
B. Time display
C. Time of day indicator

9.2 Buttons

Button	Function	Description
—	MINUS	To set the time.
⏲	CLOCK	To set a clock function.
+	PLUS	To set the time.

9.3 Setting the MINUTE MINDER

1. Press ⏲ again and again until 🔔 starts to flash.
2. Press + or — to set the necessary time.

The Minute Minder starts automatically after 5 seconds.

3. When the set time ends, an acoustic signal sounds. Press any button to stop the acoustic signal.
4. Turn the knob for the oven functions to the off position.

9.4 Cancelling the clock functions

1. Press the ⏲ again and again until the necessary function indicator starts to flash.
2. Press and hold —.

The clock function goes out after some seconds.

10. OVEN - HINTS AND TIPS

WARNING!
Refer to Safety chapters.

The temperature and baking times in the tables are guidelines only. They depend on the recipes and the quality and quantity of the ingredients used.

CAUTION!
Spillages from the food can block the burner holes, to avoid this place the food in centre of the shelf in the gas oven.

10.1 Top oven

The top oven is the smaller of the two ovens. It has 3 shelf positions. Use it to cook smaller quantities of food. It gives especially good results when used to cook fruitcakes, sweets and savoury flants or quiche.

10.2 Main oven

The main oven is particularly suitable for cooking larger quantities of food.

10.3 Baking

Use the lower temperature the first time.

You can extend baking times by 10 – 15 minutes if you bake cakes on more than one shelf position.

Cakes and pastries at different heights do not always brown equally. There is no need to change the temperature setting if an unequal browning occurs. The differences equalize during baking.

Trays in the oven can twist during baking. When the trays become cold again, the distortions disappear.

10.4 Tips on baking

Baking results	Possible cause	Remedy
The bottom of the cake is not baked sufficiently.	The shelf position is incorrect.	Put the cake on a lower shelf.
The cake sinks and becomes soggy or streaky.	The oven temperature is too high.	Next time set slightly lower oven temperature.
	The baking time is too short.	Next time set a longer baking time and lower oven temperature.
The cake is too dry.	The oven temperature is too low.	Next time set higher oven temperature.
	The baking time is too long.	Next time set shorter baking time.
The cake bakes unevenly.	The oven temperature is too high and the baking time is too short.	Set lower oven temperature and longer baking time.
	The cake batter is not evenly distributed.	Next time spread the cake batter evenly on the baking tray.
The cake is not ready in the baking time specified in a recipe.	The oven temperature is too low.	Next time set a slightly higher oven temperature.

10.5 Conventional Cooking - Main oven

Baking in tray

Food	Preheating time (min)	Heat setting	Time (min)	Shelf position
Éclairs	15	4	20 - 30	3
Choux Pastry	15	5	30 -35	3
Scones	15	6	15 - 25	4
Bread rolls	15	4	20 - 30	4
Bread	15	4	30 - 40	4
Roast Potatoes	15	5	60 - 90	3

Baking in tins

Food	Preheating time (min)	Heat setting	Time (min)	Shelf position	Accessories
Madeira cake	15	2	85 - 100	3	Round tins on wire shelf
Rich fruit cake	15	1	115 - 125	3	Round tin on wire shelf
Christmas cake	15	1	200 - 240	3	Round tin on wire shelf
Victoria Sandwich	15	3	25 - 35	3	2 round tins on wire shelf
Flapjack	15	4	25 - 35	3	Tin on wire shelf
Flaky Pastry	15	5	30 - 40	3	Tin on wire shelf
Ginger bread	15	1	85 - 100	3	2 square tins on wire shelf

Pizza

Food	Preheating time (min)	Heat setting	Time (min)	Shelf position	Accessories
Quiche Lorraine / Tarts / Flans	15	5	45 - 55	4	Round tin on wire shelf

Other dishes

Food	Preheating time (min)	Heat setting	Time (min)	Shelf position	Accessories
Pasta / Lasagne etc.	15	4	35 - 45	3	Tray on wire shelf
Fish Pie	15	5	30 - 40	3	Tray on wire shelf
Shepherd's Pie	15	6	40 - 50	3	Tray on wire shelf
Mince Pies	15	4	15 - 25	3	Tins on wire shelf
Meat Pies	15	1	30 - 40	3	Tray on wire shelf
Milk pudding	15	2	90 - 120	3	Tray on wire shelf
Soufflés	15	4	20 - 30	3	Ceramic ramekins on wire shelf
Beef Casserole	15	2	150 - 180	3	Casserole on wire shelf
Lamb Casserole	15	3	150 - 180	3	Casserole on wire shelf
Convenience Foods	15	Follow the manufacturer's instruction			
Baked Potatoes	15	5	60 - 90	3	Tray on wire shelf
Rice pudding	15	3	55 - 70	3	Tray on wire shelf
Large Yorkshire Puddings	15	6	25 - 40	3	Tray on wire shelf
Individual Yorkshire Puddings	15	6	20 - 30	3	Ceramic ramekins on wire shelf

10.6 Roasting

Use heat-resistant ovenware.

Roast lean meat covered.

Roast large meat joints directly in the tray or on the wire shelf placed above the tray.

Put some water in the tray to prevent dripping fat from burning.

Turn the roast after 1/2 - 2/3 of the cooking time.

Baste meat joints with their own juice several times during roasting.

10.7 Roasting

Food	Preheating time (min)	Heat setting	Time (min)	Shelf position	Accessories
Beef / Beef boned	15	5	60 - 70	2	Trivet in Grill-/Roasting pan
Mutton / Lamb	15	5	65 - 75	2	Trivet in Grill-/Roasting pan
Fish trout	15	4	40 - 40	3	Trivet in Grill-/Roasting pan
Pork / Veal / Ham	15	5	80 -90	2	Grill-/Roasting pan
Chicken	15	5	80 - 90	2	Trivet in Grill-/Roasting pan
Turkey / Goose	15	5	150 - 180	2	Trivet in Grill-/Roasting pan
Duck	15	4	120 - 130	2	Trivet in Grill-/Roasting pan
Pheasant	15	5	65 - 75	2	Trivet in Grill-/Roasting pan
Rabbit	15	5	120 - 140	2	Trivet in Grill-/Roasting pan

10.8 Grilling in general

WARNING!
Always grill with the oven door closed.

- **Always grill with the maximum temperature setting.**
- Set the shelf into the shelf position as recommended in the grilling table.
- Always set the deep pan to collect the fat into the first shelf position.
- Grill only flat pieces of meat or fish.

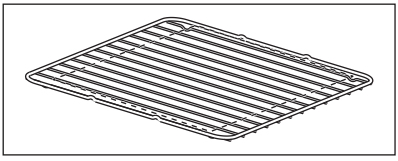

The grilling area is set in centre of the shelf.

10.9 Grilling - Full Grill

Food	Preheating time (min)	Grilling time (min)	Shelf position	Accessories
Bacon	10	20 - 30	2	Trivet in Grill-/ Roasting pan
Chicken joints	10	30 - 40	2	Trivet in Grill-/ Roasting pan
Lamb chops	10	20 - 25	2	Trivet in Grill-/ Roasting pan
Pork chops	10	25 - 35	2	Trivet in Grill-/ Roasting pan
Whole trout / Mackerel	10	20 - 30	2	Trivet in Grill-/ Roasting pan
Plaice / Cod fillet	10	20 - 30	2	Trivet in Grill-/ Roasting pan
Kebabs	10	20 - 30	2	Trivet in Grill-/ Roasting pan
Kidneys - Lamb / Pig	10	10 - 20	2	Trivet in Grill-/ Roasting pan
Liver - Lamb / Pig	10	15 - 25	2	Trivet in Grill-/ Roasting pan
Sausages	10	20 - 30	2	Trivet in Grill-/ Roasting pan
Steak Rare	10	10 - 20	2	Trivet in Grill-/ Roasting pan
Steak Medium	10	15 - 25	2	Trivet in Grill-/ Roasting pan
Steak Well done	10	20 - 30	2	Trivet in Grill-/ Roasting pan

10.10 Information for test institutes

Main oven

Food	Preheating time (min)	Heat setting	Time (min)	Shelf position	Accessories
Small cake	15	2	20 - 30	4	Grill-/Roasting pan
Fatless sponge cake	15	2	25 - 35	3	1 tin (Ø 26 cm) on wire shelf

Food	Preheating time (min)	Heat setting	Time (min)	Shelf position	Accessories
Apple pie	15	3	80 - 100	3	2 tins (Ø 20 cm) on wire shelf
Pastry stripes / short bread	15	1	15 -20	4	Patisserie tray

Top oven - grill

Food	Preheating time (min)	Time (min)	Shelf position	Accessories
Beef burgers	10	15 - 20 first side 5 - 10 second side	2	Trivet with Grill-/ Roasting pan
Toast	10	2 - 3	2	Trivet with Grill-/ Roasting pan

11. OVEN - CARE AND CLEANING

WARNING!
Refer to Safety chapters.

11.1 Notes on cleaning

Agents

Clean the front of the oven with a soft cloth with warm water and a mild cleaning agent.

To clean metal surfaces, use a dedicated cleaning agent.

Clean stubborn stains with a special oven cleaner. Do not apply oven cleaner on the catalytic surfaces.

Everyday Use

Clean the oven cavity after each use. Fat accumulation or other food remains may cause a fire. The risk is higher for the grill pan.

Wipe off moisture from the cavity after each use.

Accessories

Clean all accessories after each use and let them dry. Use a soft cloth with warm water and a cleaning agent. Do not clean the accessories in the dishwasher.

Do not clean the non-stick accessories using aggressive agents, sharp-edged objects or in a dishwasher

11.2 Stainless steel or aluminium ovens

Clean the oven door with a damp cloth or sponge only. Dry it with a soft cloth.

Do not use steel wool, acids or abrasive materials as they can damage the oven surface. Clean the oven control panel with the same precautions.

11.3 Catalytic cleaning

CAUTION!
Do not clean the catalytic surface with oven sprays, abrasive cleaning agents, soap or other cleaning agents. This will damage the catalytic surface.

Spots or discolouration of the catalytic surface have no effect on catalytic properties.

WARNING!
Keep children away when you clean the oven at a high temperature. The oven surface becomes very hot and there is a risk of burns.

CAUTION!
Always turn the oven light on while using the catalytic cleaning (if applicable).

Before activating the catalytic cleaning remove all the accessories from the oven.

The walls with a catalytic coating are self-cleaning. They absorb fat which collects on the walls while the appliance operates.

To support the self-cleaning procedure, heat the empty oven on a regular basis.

1. Clean the oven floor with warm water and washing up liquid, then dry it.
2. Set the maximum temperature and let oven operate for 1 hour.
3. Set the oven temperature to 250 °C and let the oven operate for 1 hour.
4. When the appliance is cool, clean it with a soft and moist sponge.

11.4 Removing the shelf supports

To clean the oven, remove the shelf supports.

1. Pull the front of the shelf support away from the side wall.

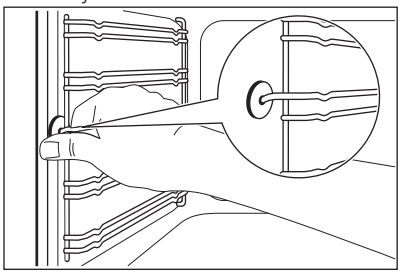

2. Pull the rear end of the shelf support away from the side wall and remove it.

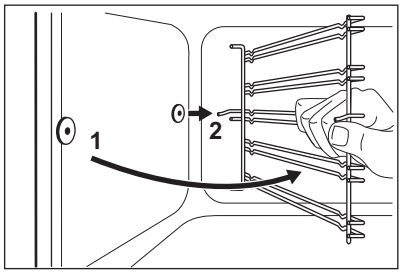

Install the shelf supports in the opposite sequence.

CAUTION!
Make sure that the longer fixing wire is in the front. The ends of the two wires must point to the rear. Incorrect installation can cause damage to the enamel.

11.5 Removing and cleaning the door glasses - top oven

The door glass in your product can be different in type and shape from the examples you see in the image. The number of glasses can also be different.

1. Open the door.
2. Hold the door trim on the top edge of the door at the two sides and push inwards to release the clip seal.

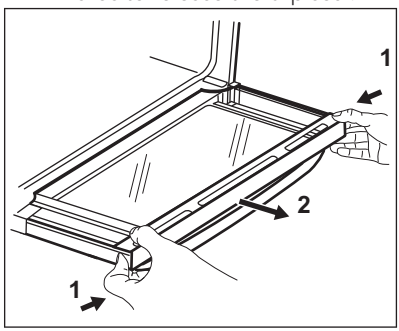

3. Pull the door trim to the front to remove it.
4. Remove the glass panels.

To install the panels, do the same steps in reverse.

11.6 Removing and cleaning the door glasses - main oven

The door glass in your product can be different in type and shape from the example you see in the image. The number of glasses can also be different.

1. Push the door trim at one side to remove it.

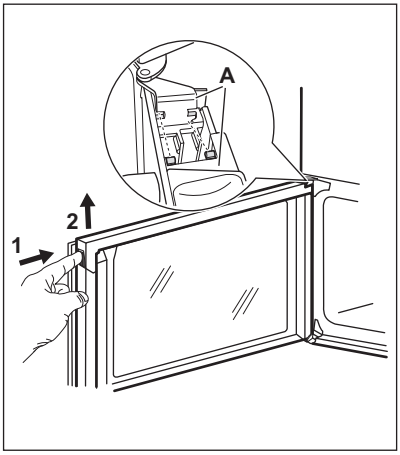

2. Pull up the trim.
3. Remove the glass panels.

To replace the glass panels, do the same steps in reverse. Before you lower the trim, attach the A trim part to the door. Refer to the image.

11.7 Replacing the lamp

WARNING!
Risk of electric shock.
The lamp can be hot.

1. Turn off the oven.

Wait until the oven is cooled down.

2. Disconnect the oven from the mains.
3. Put a cloth on the bottom of the cavity.

The back lamp

The lamp glass cover is at the back of the cavity.

1. Turn the lamp glass cover counterclockwise to remove it.
2. Clean the glass cover.
3. Replace the oven lamp with a suitable 300 °C heat-resistant oven lamp.
   Use the same oven lamp type.
4. Install the glass cover.

12. TROUBLESHOOTING

WARNING!
Refer to Safety chapters.

12.1 What to do if...

Problem	Possible cause	Remedy
You cannot activate the appliance.	The appliance is not connected to an electrical supply or it is connected incorrectly.	Check if the appliance is correctly connected to the electrical supply.
You cannot activate the appliance.	The fuse is blown.	Make sure that the fuse is the cause of the malfunction. If the fuse is blown again and again, contact a qualified electrician.
The burners do not work.	There is no gas supply.	Check the gas connection.

Problem	Possible cause	Remedy
There is no spark when you try to activate the spark generator.	Burner cap and crown are placed incorrectly.	Place the burner cap and crown correctly.
The flame extinguishes immediately after ignition.	Thermocouple is not heated up sufficiently.	After lightning the flame, keep the knob pushed for equal or less than 10 seconds.
The flame ring is uneven.	Burner crown is blocked with food residues.	Make sure that the injector is not blocked and the burner crown is clean.
The oven does not heat up.	The oven is deactivated.	Activate the oven.
The oven does not heat up.	The clock is not set.	Set the clock.
The oven does not heat up.	The necessary settings are not set.	Make sure that the settings are correct.
The lamp does not operate.	The lamp is defective.	Replace the lamp.
The display shows "12.00".	There was a power cut.	Reset the clock.
Steam and condensation settle on the food and in the cavity of the oven.	You left the dish in the oven for too long.	Do not leave the dishes in the oven for longer than 15 - 20 minutes after the cooking process ends.

12.2 Service data

If you cannot find a solution to the problem yourself, contact your dealer or an Authorised Service Centre.

The necessary data for the service centre is on the rating plate. The rating plate is on the front frame of the oven cavity. Do not remove the rating plate from the oven cavity.

We recommend that you write the data here:	
Model (MOD.)	.....
Product number (PNC)	.....
Serial number (S.N.)	.....

13. INSTALLATION

WARNING!
Refer to Safety chapters.

13.1 Technical data

Dimensions	
Height	894 - 912 mm

Dimensions	
Width	600 mm
Depth	609 mm

13.2 Location of the appliance

You can install your freestanding appliance with cabinets on one or two sides and in the corner.

For the minimal distances of fitting check the table.

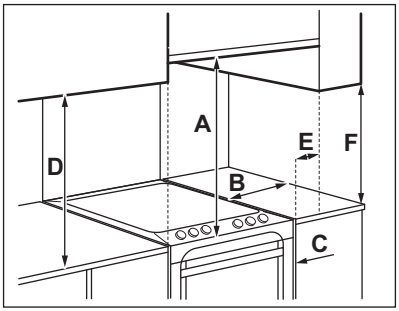

Minimum distances

Dimension	mm
A	650
B	450
C	2
D	400
E	150
F	less than 400

13.3 Levelling of the appliance

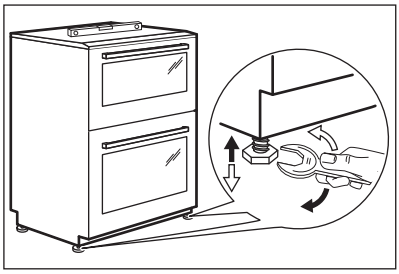

Use small feet on the bottom of appliance to set the appliance top surface level with other surfaces.

13.4 The stability chain

CAUTION!
Install the stability chain to prevent the appliance from tilting. The stability chain only works when the appliance is put in a correct area.

1. Measure down 180 mm from the appliance top surface, then measure right 30 mm.
2. Mark the position of the wall and this gives anchor point for the stability chain.

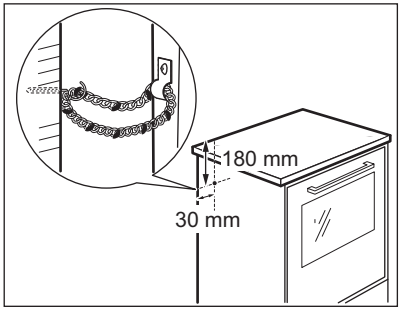

13.5 Other technical data

WARNING!
These instructions are only valid in the countries whose symbols appear on this booklet's cover.

Gas category:	I2H
Gas supply:	G20 (2H) 20 mbar
Voltage:	220-240 V
Frequency:	50 Hz

13.6 Gas burners

BURNER	NORMAL POWER kW	Natural Gas	
		INJECTOR MARK 1/100 mm	Btu/h
Auxiliary	1	70	3412
Semi-rapid	1.9	96	6483
Rapid	3	119	10236
Top Oven	1.7	95	5804
Main Oven	1.7	95	5804

13.7 Gas Connection

Use a flexible pipe in compliance with the regulation in force. Make sure they do not come in touch with mobile parts and are not squeezed.

WARNING!
Only a qualified and competent person can do the gas installation.
Before you connect te gas, disconnect the appliance from the electricity supply or switch off the fuse in the fuse box. Close the primary valve of the gas supply.

Supply piping should not be less than R3/8. Connection is made to the Rc 1/2 (1/2 " B.S.P.) female threaded.
The entry pipe is located just below the hob level on the rear left hand side of the appliance.
The gas supply ramp is on the rear side of the appliance.

WARNING!
Only liquid sealants can be used when the inlet gas pipe is fitted i.e.: do not use the P.T.F.E. sealant tape.
When the installation is complete, carry out a gas tightness test and make sure that the seal of each pipe fitting does not leak.

Use flexible tubing, which comply with the BS.669 current edition.

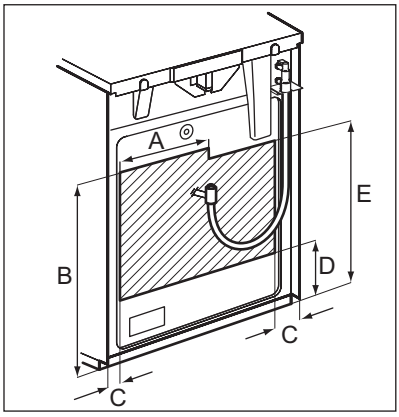

WARNING!
The gas bayonet connector must be in the marked area.

Dimension	mm
A	250
B	680
C	50
D	250
E	580

13.8 Pressure test

The Rapid injector is used as a pressure test point.

1. Connect the pressure gauge to the Rapid injector.
2. Examine the supply pressure by turning the Rapid burner and one other burner fully on, and lighting them. The pressure must be 20 mbar for Natural Gas.
3. Turn the taps off and disconnect the pressure gauge.
4. Make sure that all burners work correctly.

13.9 Checking the hob burners

1. Lift the lid.
2. Put on the burner crowns and caps. Make sure that they are correctly seated.
3. Put on the pan supports.
4. Light one of the hob burners. To light the hob burner refer to the "Ignition of the hob burners". Check if the flame is regular. Check each of the burners.
5. Turn the knob for the hob to the off position.

13.10 Checking the oven burners

1. Put in the deep pan and the trivet.
2. Light the oven burner. To light the oven burner refer to the "Ignition of the oven burners". Check if the flame is regular.
3. Turn the knob to the off position.

13.11 Checking the Lid Safety Device

1. Lift the lid.
2. Light one of the hob burners. To light the hob burner refer to the "Ignition of the hob burners".
3. Close the lid. There should be no gas supply to the hob burners. The burner goes out.
4. Turn the knob to the off position and lift the lid. The gas supply should be restored to the hob burners, when you turn the knob on.

13.12 Electrical installation

WARNING!
The manufacturer is not responsible if you do not follow the safety precautions from Safety chapters.

This appliance is supplied with a main plug and a main cable.

The spark generator is active all the time if the phases are not connected correctly.

WARNING!
The power cable must not touch the part of the appliance shaded in the illustration.

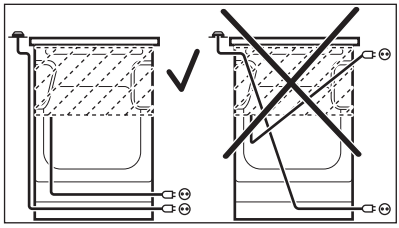

14. ENERGY EFFICIENCY

14.1 Product information for hob according to EU 66/2014

Model identification	CGB6133CCM	
Type of hob	Hob inside Freestanding Cooker	
Number of gas burners	4	
Energy efficiency per gas burner (EE gas burner)	Left Front - Rapid	55.0 %
	Left rear - Semi Rapid	55.6 %
	Right front - Auxiliary	not applicable
	Right rear- Semi Rapid	55.6 %
Energy efficiency for the gas hob (EE gas hob)		55.4 %

EN 30-2-1: Domestic cooking appliances burning gas - Part 2-1 : Rational use of energy - General

14.2 Hob - Energy saving

You can save energy during everyday cooking if you follow below hints.

- When you heat up water, use only the amount you need.
- If it is possible, always put the lids on the cookware.
- Before you use the burners and pan support make sure they are assembled correctly.
- The cookware bottom should have the correct diameters for the burner size.
- Put the cookware directly over the burner and in the centre of it.
- When the liquid starts to boil, turn down the flame to barely simmer the liquid.
- If it is possible, use a pressure cooker. Refer to its user manual.

14.3 Product Fiche and information for ovens according to EU 65-66/2014

Supplier's name	AEG
Model identification	CGB6133CCM
Energy Efficiency Index	Top oven: 95.1 Main oven: 90.0
Energy efficiency class	Top oven: A Main oven: A
Energy consumption with a standard load, conventional mode	Top oven: 1.35 kWh/cycle 4.86 MJ/cycle Main oven: 1.80 kWh/cycle 6.46 MJ/cycle

Number of cavities	2
Heat source	Gas
Volume	Top oven: 36 l Main oven: 83 l
Type of oven	Oven inside Freestanding Cooker
Mass	63.4 kg

EN 15181 Measuring method of the energy consumption of gas fired ovens.

14.4 Oven - Energy saving

The oven contains features which help you save energy during everyday cooking.

Make sure that the oven door is closed properly when the oven operates. Do not open the door too often during cooking. Keep the door gasket clean and make sure it is well fixed in its position.

Use metal cookware to improve energy saving.

When possible, do not preheat the oven before cooking.

Keep breaks between baking as short as possible when you prepare a few dishes at one time.

Residual heat
When the cooking duration is longer than 30 minutes, reduce the oven temperature to minimum 3 - 10 minutes before the end of cooking. The residual heat inside the oven will continue to cook.

Use the residual heat to warm up other dishes.

Keep food warm
Choose the lowest possible temperature setting to use residual heat and keep a meal warm.

15. ENVIRONMENTAL CONCERNS

Recycle materials with the symbol ♺. Put the packaging in relevant containers to recycle it. Help protect the environment and human health by recycling waste of electrical and electronic appliances. Do not dispose of appliances marked with the symbol with the household waste. Return the product to your local recycling facility or contact your municipal office.

www.aeg.com/shop



867338485-B-502018

CE

AEG