ATB8101VNW
ATB8101VNX

EN **User Manual**
Freezer

USER MANUAL

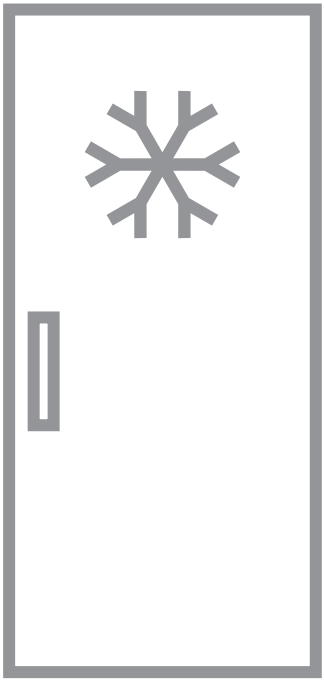

AEG

CONTENTS

1. SAFETY INFORMATION....2
2. SAFETY INSTRUCTIONS....4
3. OPERATION....6
4. DAILY USE....7
5. HINTS AND TIPS....8
6. CARE AND CLEANING....9
7. TROUBLESHOOTING....10
8. INSTALLATION....12
9. TECHNICAL DATA....15

FOR PERFECT RESULTS

Thank you for choosing this AEG product. We have created it to give you impeccable performance for many years, with innovative technologies that help make life simpler features you might not find on ordinary appliances. Please spend a few minutes reading to get the very best from it.
Visit our website for:



Get usage advice, brochures, trouble shooter, service information:
www.aeg.com/webselfservice



Register your product for better service:
www.registeraeg.com



Buy Accessories, Consumables and Original spare parts for your appliance:
www.aeg.com/shop

CUSTOMER CARE AND SERVICE

Always use original spare parts.
When contacting our Authorised Service Centre, ensure that you have the following data available: Model, PNC, Serial Number.
The information can be found on the rating plate.

⚠ Warning / Caution-Safety information

ⓘ General information and tips

Environmental information

Subject to change without notice.

1. ⚠ SAFETY INFORMATION

Before the installation and use of the appliance, carefully read the supplied instructions. The manufacturer is not responsible for any injuries or damages that are the result of incorrect installation or usage. Always keep the instructions in a safe and accessible location for future reference.

1.1 Children and vulnerable people safety

- This appliance can be used by children aged from 8 years and above and persons with reduced physical, sensory or mental capabilities or lack of experience and knowledge if they have been given supervision or instruction concerning the use of the appliance in a safe way and understand the hazards involved.
- This appliance may be used by children between 3 and 8 years of age and persons with very extensive and complex disabilities, if they have been properly instructed.
- Children of less than 3 years of age should be kept away unless continuously supervised.
- Do not let children play with the appliance.
- Children shall not carry out cleaning and user maintenance of the appliance without supervision.
- Keep all packaging away from children and dispose of it appropriately.

1.2 General Safety

- This appliance is intended to be used in household and similar applications such as:
  - Farm houses; staff kitchen areas in shops, offices and other working environments
  - By clients in hotels, motels, bed and breakfast and other residential type environments
- Keep ventilation openings, in the appliance enclosure or in the built-in structure, clear of obstruction.
- Do not use mechanical devices or other means to accelerate the defrosting process, other than those recommended by the manufacturer.
- Do not damage the refrigerant circuit.
- Do not use electrical appliances inside the food storage compartments of the appliance, unless they are of the type recommended by the manufacturer.
- Do not use water spray and steam to clean the appliance.

- Clean the appliance with a moist soft cloth. Only use neutral detergents. Do not use abrasive products, abrasive cleaning pads, solvents or metal objects.
- Do not store explosive substances such as aerosol cans with a flammable propellant in this appliance.
- If the supply cord is damaged, it must be replaced by the manufacturer, its Authorised Service Centre or similarly qualified persons in order to avoid a hazard.

2. SAFETY INSTRUCTIONS

2.1 Installation

WARNING!
Only a qualified person must install this appliance.

- Remove all the packaging and the transit bolts.
- Do not install or use a damaged appliance.
- Follow the installation instructions supplied with the appliance.
- Always take care when moving the appliance as it is heavy. Always use safety gloves and enclosed footwear.
- Make sure the air can circulate around the appliance.
- At first installation or after reversing the door wait at least 4 hours before connecting the appliance to the power supply. This is to allow the oil to flow back in the compressor.
- Before carrying out any operations on the appliance (e.g. reversing the door), remove the plug from the power socket.
- Do not install the appliance close to radiators or cookers, ovens or hobs.
- Do not install the appliance where there is direct sunlight.
- Do not install this appliance in areas that are too humid or too cold.
- When you move the appliance, lift it by the front edge to avoid scratching the floor.

2.2 Electrical connection

WARNING!
Risk of fire and electric shock.

- The appliance must be earthed.
- Make sure that the parameters on the rating plate are compatible with the electrical ratings of the mains power supply.
- Always use a correctly installed shockproof socket.
- Do not use multi-plug adapters and extension cables.
- Make sure not to cause damage to the electrical components (e.g. mains plug, mains cable, compressor). Contact the Authorised Service Centre or an electrician to change the electrical components.
- The mains cable must stay below the level of the mains plug.
- Connect the mains plug to the mains socket only at the end of the installation. Make sure that there is access to the mains plug after the installation.
- Do not pull the mains cable to disconnect the appliance. Always pull the mains plug.

2.3 Use

WARNING!
Risk of injury, burns, electric shock or fire.

- Do not change the specification of this appliance.

- Do not put electrical appliances (e.g. ice cream makers) in the appliance unless they are stated applicable by the manufacturer.
- Be careful not to cause damage to the refrigerant circuit. It contains isobutane (R600a), a natural gas with a high level of environmental compatibility. This gas is flammable.
- If damage occurs to the refrigerant circuit, make sure that there are no flames and sources of ignition in the room. Ventilate the room.
- Do not let hot items to touch the plastic parts of the appliance.
- Do not put soft drinks in the freezer compartment. This will create pressure on the drink container.
- Do not store flammable gas and liquid in the appliance.
- Do not put flammable products or items that are wet with flammable products in, near or on the appliance.
- Do not touch the compressor or the condenser. They are hot.
- Do not remove or touch items from the freezer compartment if your hands are wet or damp.
- Do not freeze again food that has been thawed.
- Obey the storage instructions on the packaging of frozen food.

2.4 Care and cleaning

WARNING!
Risk of injury or damage to the appliance.

- Before maintenance, deactivate the appliance and disconnect the mains plug from the mains socket.
- This appliance contains hydrocarbons in the cooling unit. Only a qualified person must do the maintenance and the recharging of the unit.
- Regularly examine the drain of the appliance and if necessary, clean it. If the drain is blocked, defrosted water collects in the bottom of the appliance.

2.5 Service

- To repair the appliance contact an Authorised Service Centre.
- Use original spare parts only.

2.6 Disposal

WARNING!
Risk of injury or suffocation.

- Disconnect the appliance from the mains supply.
- Cut off the mains cable and discard it.
- Remove the door to prevent children and pets to be closed inside of the appliance.
- The refrigerant circuit and the insulation materials of this appliance are ozone-friendly.
- The insulation foam contains flammable gas. Contact your municipal authority for information on how to discard the appliance correctly.
- Do not cause damage to the part of the cooling unit that is near the heat exchanger.

3. OPERATION

3.1 Control panel

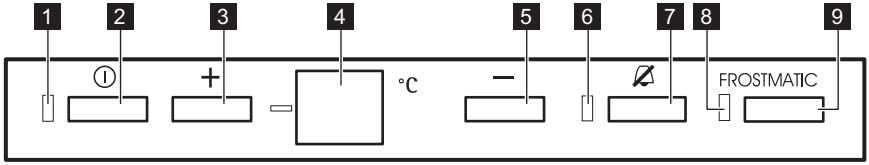

1 ON/OFF Power Indicator Light
2 ON/OFF Button
3 Temperature Warmer Button
4 Display
5 Temperature Colder Button
6 Alarm Indicator Light
7 Alarm Stop Button
8 FROSTMATIC Indicator Light
9 FROSTMATIC Button

3.2 Switching on

Leave the appliance to stand upright for 4 hours after installation.

1. Insert the plug into the wall socket
2. Press the ON/OFF button. The Green ON/OFF Indicator Light will light up. The lighting up of the Green ON/OFF Indicator Light means that the appliance is switched on.

The blinking of the Red Alarm Indicator Light and the Acoustic Alarm means an improper temperature in the freezer. To switch off the Acoustic Alarm and the temperature Display flashing, press the Alarm Stop button.

When normal conditions are restored, the Acoustic Alarm will stop automatically. If the Red Alarm Indicator Light will continue to flash, press the Alarm Stop Button.

When switching on the freezer for the first time, the Red Alarm Indicator Light will blink until the internal temperature has reached a level required for the safe conservation of frozen food.

3.3 Switching off

Press ON/OFF Button for 3 seconds. The Green ON/OFF Indicator Light and the Display switches off.

To disconnect the appliance from the power disconnect the mains plug from the power socket.

3.4 High temperature alarm

Under normal operating conditions, the internal temperature of the freezer will ensure the long-term conservation of the stored food.

The temperature increase above a certain level in the freezer (-12 °C, for example due to an earlier power failure) is indicated by flashing the Red Alarm Indicator Light and sounding the acoustic alarm.

1. Press the Alarm Stop Button. The acoustic alarm switches off.

The Display shows the highest temperature reached for a few seconds. Then show again the set temperature.

The Red Alarm Indicator Light continues to flash until the internal temperature has reached a level required for the safe conservation of frozen food.

3.5 Temperature regulation

The set temperature of the freezer may be adjusted by pressing the Temperature Regulator Button.
Default temperature:

- -18°C for the freezer

The Display shows the set temperature.

The set temperature will be reached within 24 hours. After a power failure the set temperature remains stored.

3.6 FROSTMATIC function

If more than 3-4 kg of food is to be frozen:

1. Press the FROSTMATIC button for 2-3 seconds to activate the FROSTMATIC function 6-24 hours before placing the fresh food in the freezer, the Yellow FROSTMATIC Indicator Light will illuminate. The compressor will now run continuously, to ensure that the fresh food is frozen as quickly as possible.

   It is possible to deactivate the function at any time by pressing the FROSTMATIC button for 2-3 seconds.
2. Place the food in the freezing compartment or compartments and leave the FROSTMATIC function for a further 24 hours.
3. Once the food is completely frozen, press the FROSTMATIC button for 2-3 seconds and the Yellow FROSTMATIC Indicator Light will go out.
4. Move frozen food from the freezing compartments into the storing compartments to make room for another freezing.

4. DAILY USE

WARNING!
Refer to Safety chapters.

4.1 Freezing fresh food

The freezer compartment is suitable for freezing fresh food and storing frozen and deep-frozen food for a long time.

To freeze fresh food activate the FROSTMATIC function and place the food to be frozen in the freezer compartment.

Place the fresh food to be frozen in the bottom compartment.

The maximum amount of food that can be frozen in 24 hours is specified on the **rating plate**, a label located on the inside of the appliance.

The freezing process lasts 24 hours: during this period do not add other food to be frozen.

When the freezing process is completed, return to the required temperature (see "FROSTMATIC Function").

4.2 Storage of frozen food

When first starting-up or after a period out of use, before putting the products in the compartment let the appliance run at least 2 hours on the higher settings.

In the event of accidental defrosting, for example due to a power failure, if the power has been off for longer than the value shown in the technical characteristics chart under "rising time", the defrosted food must be consumed quickly or cooked immediately and then re-frozen (after cooling).

4.3 Thawing

Deep-frozen or frozen food, prior to being used, can be thawed in the refrigerator compartment or at room temperature, depending on the time available for this operation.

Small pieces may even be cooked still frozen, directly from the freezer: in this case, cooking will take longer.

5. HINTS AND TIPS

5.1 Normal operating sounds

The following sounds are normal during operation:

- A faint gurgling and bubbling sound from coils sound when refrigerant is pumped.
- A whirring and pulsating sound from the compressor when refrigerant is pumped.
- A sudden cracking noise from inside appliance caused by thermic dilatation (a natural and not dangerous physical phenomenon).
- A faint click noise from the temperature regulator when the compressor switches on or off.

5.2 Hints for energy saving

- Do not open the door frequently or leave it open longer than absolutely necessary.

5.3 Hints for freezing

To help you make the most of the freezing process, here are some important hints:

- the maximum quantity of food which can be frozen in 24 hours is shown on the rating plate;
- the freezing process takes 24 hours no further food to be frozen should be added during this period;
- freeze only top quality, fresh and thoroughly cleaned, foodstuffs;
- prepare food in small portions to enable it to be rapidly and completely frozen and to make it possible subsequently to thaw only the quantity required;
- wrap up the food in aluminium foil or polythene and make sure that the packages are airtight;
- do not allow fresh, unfrozen food to touch food which is already frozen, thus avoiding a rise in temperature of the latter;
- lean foods store better and longer than fatty ones; salt reduces the storage life of food;
- water ices, if consumed immediately after removal from the freezer compartment, can possibly cause the skin to be freeze burnt;
- it is advisable to show the freezing in date on each individual pack to enable you to keep tab of the storage time.

5.4 Hints for storage of frozen food

To obtain the best performance from this appliance, you should:

- make sure that the commercially frozen foodstuffs were adequately stored by the retailer;
- be sure that frozen foodstuffs are transferred from the foodstore to the freezer in the shortest possible time;
- not open the door frequently or leave it open longer than absolutely necessary;
- once defrosted, food deteriorates rapidly and cannot be refrozen;
- do not exceed the storage period indicated by the food manufacturer.

6. CARE AND CLEANING

WARNING!
Refer to Safety chapters.

6.1 General warnings

CAUTION!
Unplug the appliance before carrying out any maintenance operation.

This appliance contains hydrocarbons in its cooling unit; maintenance and recharging must therefore only be carried out by authorized technicians.

The accessories and parts of the appliance are not suitable for washing in a dishwasher.

6.2 Cleaning the interior

Before using the appliance for the first time, the interior and all internal accessories should be washed with lukewarm water and some neutral soap to remove the typical smell of a brand-new product, then dried thoroughly.

CAUTION!
Do not use detergents, abrasive powders, chlorine or oil-based cleaners as they will damage the finish.

6.3 Periodic cleaning

CAUTION!
Do not pull, move or damage any pipes and/or cables inside the cabinet.

CAUTION!
Take care of not to damage the cooling system.

CAUTION!
When moving the cabinet, lift it by the front edge to avoid scratching the floor.

The equipment has to be cleaned regularly:

1. Clean the inside and accessories with lukewarm water and some neutral soap.
2. Regularly check the door seals and wipe clean to ensure they are clean and free from debris.
3. Rinse and dry thoroughly.
4. If accessible, clean the condenser and the compressor at the back of the appliance with a brush.
   This operation will improve the performance of the appliance and save electricity consumption.

6.4 Defrosting

Your appliance is frost free. This means that there is no build up of frost when it is in operation, neither on the internal walls nor on the foods.

The absence of frost is due to the continuous circulation of cold air inside the compartment, driven by an automatically controlled fan.

6.5 No-Frost technology

In order to facilitate the removal of the ice layer, the evaporator is assisted by electric heating during the defrosting procedure. The ventilator is in OFF position. The defrost water will drip in the tray placed at the compressor and will evaporate. In the course of the defrosting procedure (approx. 30 minutes) the evaporator becomes warm but it has no influence on the internal temperature.

The foods should be kept well-packed in order to avoid any moisture loss as a result of air circulation.

Do not obstruct the vent holes.

It is recommended to put all foods in the baskets in the freezer compartment.

6.6 Periods of non-operation

When the appliance is not in use for long periods, take the following precautions:

1. Disconnect the appliance from electricity supply.
2. Remove all food.
3. Clean the appliance and all accessories.
4. Leave the door/doors open to prevent unpleasant smells.

WARNING!
If you want to keep the appliance switched on, ask somebody to check it once in a while to prevent the food inside from spoiling in case of a power failure.

7. TROUBLESHOOTING

WARNING!
Refer to Safety chapters.

7.1 What to do if...

Problem	Possible cause	Solution
The appliance does not operate.	The appliance is switched off.	Switch on the appliance.
	The mains plug is not connected to the mains socket correctly.	Connect the mains plug to the mains socket correctly.
	There is no voltage in the mains socket.	Connect a different electrical appliance to the mains socket. Contact a qualified electrician.
The appliance is noisy.	The appliance is not supported properly.	Check if the appliance stands stable.
Audible or visual alarm is on.	The cabinet has been recently switched on.	Refer to "Door Open Alarm"or "High Temperature Alarm".
	The temperature in the appliance is too high.	Refer to "Door Open Alarm"or "High Temperature Alarm".
The compressor operates continually.	Temperature is set incorrectly.	Refer to "Operation" chapter.
	Many food products to be frozen were put in at the same time.	Wait a few hours and then check the temperature again.
	The room temperature is too high.	Refer to climate class chart on the rating plate.
	Food products placed in the appliance were too warm.	Allow food products to cool to room temperature before storing.

Problem	Possible cause	Solution
	The door is not closed correctly.	Refer to "Closing the door".
	The FROSTMATIC function is switched on.	Refer to "FROSTMATIC function".
There is too much frost and ice.	The door is not closed correctly or the gasket is deformed/dirty.	Refer to "Closing the door".
	Food products are not wrapped properly.	Wrap the food products better.
The compressor does not start immediately after pressing the FROSTMATIC, or after changing the temperature.	This is normal, no error has occurred.	The compressor starts after a period of time.
Water flows on the floor.	The melting water outlet is not connected to the evaporative tray above the compressor.	Attach the melting water outlet to the evaporative tray.
Temperature cannot be set.	The FROSTMATIC function is switched on.	Switch off FROSTMATIC manually, or wait until the function resets automatically to set the temperature. Refer to "FROSTMATIC function"
Door is misaligned or interferes with ventilation grill.	The appliance is not levelled.	Refer to "Levelling".
The temperature in the appliance is too low/too high.	The temperature regulator is not set correctly.	Set a higher/lower temperature.
	The door is not closed correctly.	Refer to "Closing the door".
	The food products' temperature is too high.	Let the food products temperature decrease to room temperature before storage.
	Many food products are stored at the same time.	Store less food products at the same time.
	The door has been opened often.	Open the door only if necessary.
	The FROSTMATIC function is switched on.	Refer to "FROSTMATIC function".

Problem	Possible cause	Solution
	There is no cold air circulation in the appliance.	Make sure that there is cold air circulation in the appliance.
Door does not open easily.	You attempted to re-open the door immediately after closing.	Wait a few seconds between closing and re-opening of the door.

If the advice does not lead to the desired result, call the nearest Authorized Service Centre.

7.2 Closing the door

1. Clean the door gaskets.
2. If necessary, adjust the door. Refer to "Installation".
3. If necessary, replace the defective door gaskets. Contact the Authorised Service Centre.

8. INSTALLATION

WARNING!
Refer to Safety chapters.

8.1 Positioning

Install the appliance in a dry, well ventilated indoors where the ambient temperature corresponds to the climate class indicated on the rating plate of the appliance.

Climate class	Ambient temperature
SN	+10°C to + 32°C
N	+16°C to + 32°C
ST	+16°C to + 38°C
T	+16°C to + 43°C

Some functional problems might occur for some types of models when operating outside of that range. The correct operation can only be guaranteed within the specified temperature range. If you have any doubts regarding where to install the appliance, please turn to the vendor, to our customer service or to the nearest Authorised Service Centre.

8.2 Levelling

When placing the appliance ensure that it stands level. This can be achieved by two adjustable feet at the bottom in front.

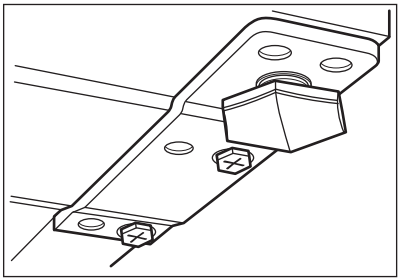

8.3 Rear spacers

In the bag with the documentation, there are two spacers which must be fitted as shown in the figure.

1. Fit the spacers into the holes. Make sure that the arrow (A) is positioned as shown in the picture.

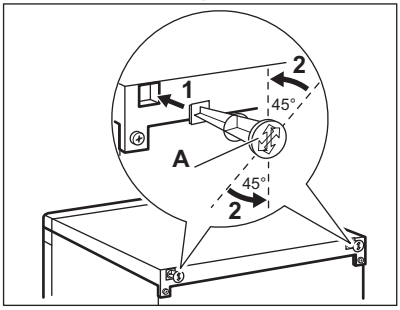

2. Turn counter-clockwise the spacers through 45° until they lock into place.

8.4 Location

It must be possible to disconnect the appliance from the mains power supply; the plug must therefore be easily accessible after installation.

The appliance should be installed well away from sources of heat such as radiators, boilers, direct sunlight etc. Ensure that air can circulate freely around the back of the cabinet. To ensure best performance, if the appliance is positioned below an overhanging wall unit, the minimum distance between the top of the cabinet and the wall unit must be at least 100 mm . Ideally, however, the appliance should not be positioned below overhanging wall units. Accurate levelling is ensured by one or more adjustable feet at the base of the cabinet.

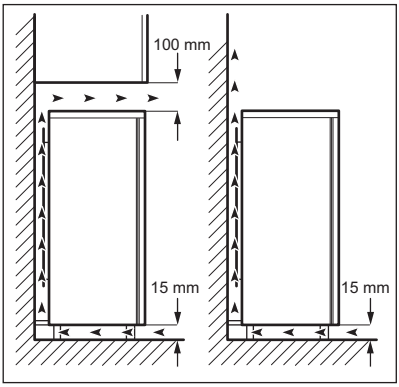

8.5 Door reversibility

WARNING!
Before carrying out any operations, remove the plug from the power socket.

CAUTION!
To carry out the following operations, we suggest that this be made with another person that will keep a firm hold on the doors of the appliance during the operations.

1. Tilt back the appliance carefully so that the compressor cannot touch the floor.
2. Unscrew both adjustable feet.

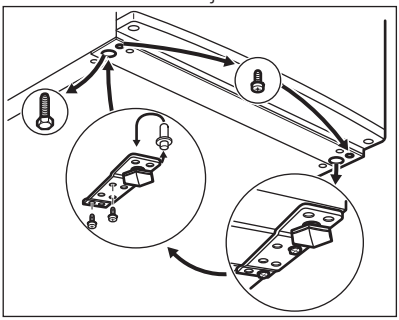

3. Unscrew the screws of the door bottom hinge.
4. Take off the appliance door by pulling it slightly downwards.
5. Unscrew the top door hinge pin of the appliance then screw it back on the other side.

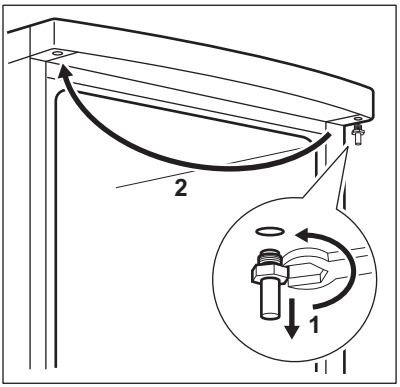

6. Fit the appliance door on the upper door hinge pin.
7. Remove the lower hinge. Put over the pin in the direction of the arrow.
8. Unscrew and install the screw on the opposite side.
9. Install the lower hinge on the opposite side leaving the position of the door unchanged.
10. Screw in the one screw in the place set free on the other side as well as the adjustable feet (2 pieces).
11. Remove and install the handle on the opposite side.

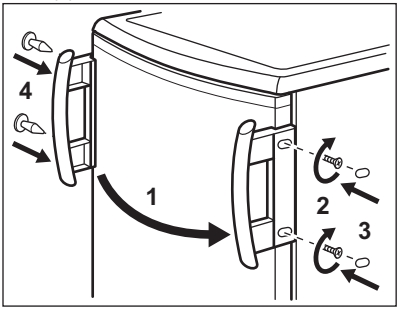

CAUTION!
Reposition, level the appliance, wait for at least four hours and then connect it to the power socket.

Do a final check to make sure that:
- All screws are tightened.
- The magnetic seal adheres to the cabinet.
- The door opens and closes correctly.

If the ambient temperature is cold (i.e. in Winter), the gasket may not fit perfectly to the cabinet. In that case, wait for the natural fitting of the gasket.
In case you do not want to carry out the above mentioned operations, contact the nearest Authorised Service Centre. The Authorised Service specialist will carry out the reversibility of the doors at your cost.

8.6 Electrical Connection

CAUTION!
Any electrical work required to install this appliance should be carried out by a qualified electrician or competent person.

WARNING!
This appliance must be earthed.
The manufacturer declines any liability should these safety measures not be observed.

The wires in the mains lead are coloured in accordance with the following code:

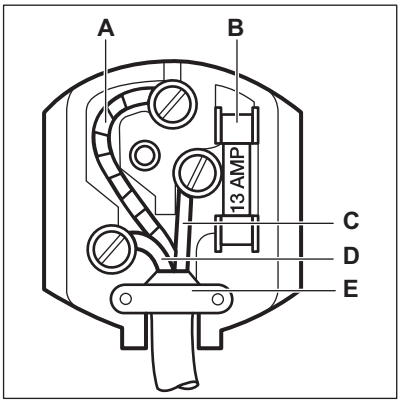

- **A** - green and yellow: Earth
- **C** - brown: Live
- **D** - blue: Neutral

As the colours of the wires in the mains lead of this appliance may not correspond with the coloured markings identifying the terminals in your plug, proceed as follows:

1. Connect the wire coloured green and yellow to the terminal marked either with the letter "E" or by the earth symbol ⏚ or coloured green and yellow.
2. Connect the wire coloured blue to the terminal either marked with the letter "N" or coloured black.
3. Connect the wire coloured brown to the terminal either marked with the "L" or coloured red.
4. Check that no cut, or stray strands of wire is present and the cord clamp (**E**) is secure over the outer sheath. Make sure the electricity supply voltage is the same as that indicated on the appliance rating plate.
5. Switch on the appliance.

The appliance is supplied with a 13 amp fuse (**B**). In the event of having to change the fuse in the plug supplied, a 13 amp ASTA approved (BS 1362) fuse must be used.

⚠ **WARNING!**
A cut off plug inserted into a 13 amp socket is a serious safety (shock) hazard. Ensure that it is disposed of safely.

9. TECHNICAL DATA

9.1 Technical data

Height	mm	850
Width	mm	595
Depth	mm	635
Rising time	Hours	13
Voltage	Volts	230 - 240
Frequency	Hz	50

The technical information is situated in the rating plate, on the external or internal side of the appliance and in the energy label.

10. ENVIRONMENTAL CONCERNS

Recycle materials with the symbol ♺. Put the packaging in relevant containers to recycle it. Help protect the environment and human health by recycling waste of electrical and electronic appliances. Do not dispose of appliances marked with the symbol with the household waste. Return the product to your local recycling facility or contact your municipal office.

www.aeg.com/shop



212001983-B-512017

CE

AEG