CCB6761ACB
CCB6761ACM

EN **User Manual**
Cooker

USER MANUAL

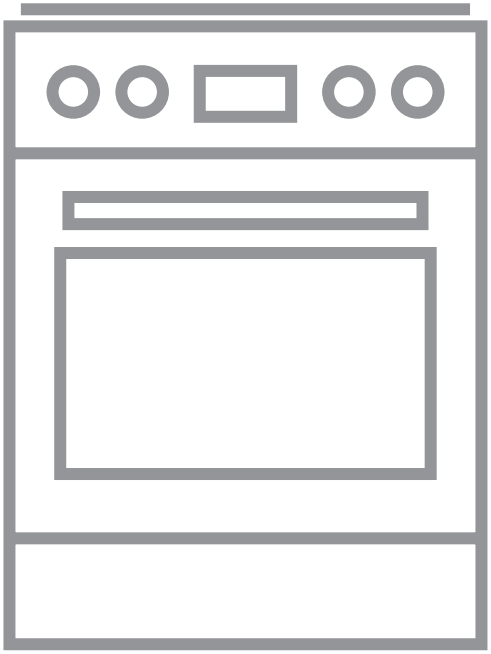

AEG

CONTENTS

1. SAFETY INFORMATION....2
2. SAFETY INSTRUCTIONS....5
3. INSTALLATION....8
4. PRODUCT DESCRIPTION....9
5. BEFORE FIRST USE....10
6. HOB - DAILY USE....11
7. HOB - HINTS AND TIPS....12
8. HOB - CARE AND CLEANING....13
9. OVEN - DAILY USE....13
10. OVEN - CLOCK FUNCTIONS....17
11. OVEN - HINTS AND TIPS....19
12. OVEN - CARE AND CLEANING....28
13. TROUBLESHOOTING....30
14. ENERGY EFFICIENCY....32

FOR PERFECT RESULTS

Thank you for choosing this AEG product. We have created it to give you impeccable performance for many years, with innovative technologies that help make life simpler - features you might not find on ordinary appliances. Please spend a few minutes reading to get the very best from it.
Visit our website for:



Get usage advice, brochures, trouble shooter, service information:
www.aeg.com/webselfservice



Register your product for better service:
www.registeraeg.com



Buy Accessories, Consumables and Original spare parts for your appliance:
www.aeg.com/shop

CUSTOMER CARE AND SERVICE

Always use original spare parts.
When contacting our Authorised Service Centre, ensure that you have the following data available: Model, PNC, Serial Number.
The information can be found on the rating plate.

⚠ Warning / Caution-Safety information

ⓘ General information and tips

Environmental information

Subject to change without notice.

1. ⚠ SAFETY INFORMATION

Before the installation and use of the appliance, carefully read the supplied instructions. The

manufacturer is not responsible for any injuries or damages that are the result of incorrect installation or usage. Always keep the instructions in a safe and accessible location for future reference.

1.1 Children and vulnerable people safety

WARNING!
Risk of suffocation, injury or permanent disability.

- This appliance can be used by children aged from 8 years and above and persons with reduced physical, sensory or mental capabilities or lack of experience and knowledge if they have been given supervision or instruction concerning the use of the appliance in a safe way and understand the hazards involved.
- Children between 3 and 8 years of age and persons with very extensive and complex disabilities shall be kept away unless continuously supervised.
- Children of less than 3 years of age should be kept away unless continuously supervised.
- Do not let children play with the appliance.
- Keep all packaging away from children and dispose of it appropriately.
- Keep children and pets away from the appliance when it operates or when it cools down. Accessible parts are hot.
- Children shall not carry out cleaning and user maintenance of the appliance without supervision.

1.2 General Safety

- Only a qualified person must install this appliance and replace the cable.
- This appliance must be connected to the mains with a H05V2V2-F type cable to withstand the temperature of the rear panel.
- This appliance is intended for use up to an altitude of 2000 m above sea level.

- This appliance is not intended to be used on a ships, boats or vessels.
- Do not install the appliance behind a decorative door in order to avoid overheating.
- Do not install the appliance on a platform.
- Do not operate the appliance by means of an external timer or separate remote-control system.
- WARNING: Unattended cooking on a hob with fat or oil can be dangerous and may result in fire.
- NEVER try to extinguish a fire with water, but switch off the appliance and then cover flame e.g. with a lid or a fire blanket.
- CAUTION: The cooking process has to be supervised. A short term cooking process has to be supervised continuously.
- WARNING: Danger of fire: Do not store items on the cooking surfaces.
- Do not use a steam cleaner to clean the appliance.
- Do not use harsh abrasive cleaners or sharp metal scrapers to clean the glass door or the glass of hinged lids of the hob since they can scratch the surface, which may result in shattering of the glass.
- Metallic objects such as knives, forks, spoons and lids should not be placed on the hob surface since they can get hot.
- If the glass ceramic surface / glass surface is cracked, switch off the appliance and unplug it from the mains. In case the appliance is connected to the mains directly using junction box, remove the fuse to disconnect the appliance from power supply. In either case contact the Authorised Service Centre.
- WARNING: The appliance and its accessible parts become hot during use. Care should be taken to avoid touching heating elements.
- Always use oven gloves to remove or put in accessories or ovenware.
- Before maintenance cut the power supply.

- Ensure that the appliance is switched off before replacing the lamp to avoid the possibility of electric shock.
- If the mains power supply cable is damaged, it must be replaced by the manufacturer, its Authorised Service Centre or similarly qualified persons to avoid an electrical hazard.
- Use only the food sensor (core temperature sensor) recommended for this appliance.
- To remove the shelf supports first pull the front of the shelf support and then the rear end away from the side walls. Install the shelf supports in the opposite sequence.
- The means for disconnection must be incorporated in the fixed wiring in accordance with the wiring rules.
- WARNING: Use only hob guards designed by the manufacturer of the cooking appliance or indicated by the manufacturer of the appliance in the instructions for use as suitable or hob guards incorporated in the appliance. The use of inappropriate guards can cause accidents.

2. SAFETY INSTRUCTIONS

2.1 Installation



WARNING!
Only a qualified person must install this appliance.

- Remove all the packaging.
- Do not install or use a damaged appliance.
- Follow the installation instructions supplied with the appliance.
- Always take care when moving the appliance as it is heavy. Always use safety gloves and enclosed footwear.
- Do not pull the appliance by the handle.
- The kitchen cabinet and the recess must have suitable dimensions.
- Keep the minimum distance from other appliances and units.
- Install the appliance in a safe and suitable place that meets installation requirements.
- Parts of the appliance carry current. Close the appliance with furniture to prevent touching the dangerous parts.
- The sides of the appliance must stay adjacent to appliances or units with the same height.
- Do not install the appliance adjacent to a door or under a window. This prevents hot cookware to fall from the appliance when the door or the window is opened.
- Make sure to install a stabilizing means in order to prevent tipping of the appliance. Refer to Installation chapter.

2.2 Electrical Connection

WARNING!
Risk of fire and electric shock.

- All electrical connections should be made by a qualified electrician.
- The appliance must be earthed.
- Make sure that the parameters on the rating plate are compatible with the electrical ratings of the mains power supply.
- Always use a correctly installed shockproof socket.
- Do not use multi-plug adapters and extension cables.
- Do not let mains cables touch or come near the appliance door, especially when the door is hot.
- The shock protection of live and insulated parts must be fastened in such a way that it cannot be removed without tools.
- Connect the mains plug to the mains socket only at the end of the installation. Make sure that there is access to the mains plug after the installation.
- If the mains socket is loose, do not connect the mains plug.
- Do not pull the mains cable to disconnect the appliance. Always pull the mains plug.
- Use only correct isolation devices: line protecting cut-outs, fuses (screw type fuses removed from the holder), earth leakage trips and contactors.
- The electrical installation must have an isolation device which lets you disconnect the appliance from the mains at all poles. The isolation device must have a contact opening width of minimum 3 mm.
- Fully close the appliance door, before you connect the mains plug to the mains socket.

2.3 Use

WARNING!
Risk of injury and burns.
Risk of electrical shock.

- This appliance is for household use only.
- Do not change the specification of this appliance.
- Make sure that the ventilation openings are not blocked.
- Do not let the appliance stay unattended during operation.
- Deactivate the appliance after each use.
- Be careful when you open the appliance door while the appliance is in operation. Hot air can release.
- Do not operate the appliance with wet hands or when it has contact with water.
- Do not use the appliance as a work surface or as a storage surface.

WARNING!
Risk of fire and explosion

- Fats and oil when heated can release flammable vapours. Keep flames or heated objects away from fats and oils when you cook with them.
- The vapours that very hot oil releases can cause spontaneous combustion.
- Used oil, that can contain food remnants, can cause fire at a lower temperature than oil used for the first time.
- Do not put flammable products or items that are wet with flammable products in, near or on the appliance.
- Do not let sparks or open flames to come in contact with the appliance when you open the door.
- Open the appliance door carefully. The use of ingredients with alcohol can cause a mixture of alcohol and air.

WARNING!
Risk of damage to the appliance.

- To prevent damage or discoloration to the enamel:
  - do not put ovenware or other objects in the appliance directly on the bottom.
  - do not put water directly into the hot appliance.
  - do not keep moist dishes and food in the appliance after you finish the cooking.
  - be careful when you remove or install the accessories.

- Discoloration of the enamel or stainless steel has no effect on the performance of the appliance.
- Use a deep pan for moist cakes. Fruit juices cause stains that can be permanent.
- Do not keep hot cookware on the control panel.
- Do not let cookware boil dry.
- Be careful not to let objects or cookware fall on the appliance. The surface can be damaged.
- Do not activate the cooking zones with empty cookware or without cookware.
- Do not put aluminium foil on the appliance or directly on the bottom of the appliance.
- Cookware made of cast iron, aluminium or with a damaged bottom can cause scratches. Always lift these objects up when you have to move them on the cooking surface.
- This appliance is for cooking purposes only. It must not be used for other purposes, for example room heating.

2.4 Care and Cleaning

WARNING!
Risk of injury, fire, or damage to the appliance.

- Before maintenance, deactivate the appliance.
  Disconnect the mains plug from the mains socket.
- Make sure the appliance is cold. There is the risk that the glass panels can break.
- Replace immediately the door glass panels when they are damaged. Contact the Authorised Service Centre.
- Be careful when you remove the door from the appliance. The door is heavy!
- Fat and food remaining in the appliance can cause fire.
- Clean regularly the appliance to prevent the deterioration of the surface material.
- Make sure the cavity and the door are wiped dry after each use. Steam produced during the operation of the appliance condensates on cavity walls and can cause corrosion. To decrease the condensation operate the appliance for 10 minutes before cooking.
- Clean the appliance with a moist soft cloth. Only use neutral detergents. Do not use any abrasive products, abrasive cleaning pads, solvents or metal objects.
- If you use an oven spray, obey the safety instructions on the packaging.
- Do not clean the catalytic enamel (if applicable) with any kind of detergent.

2.5 Internal lighting

WARNING!
Risk of electric shock.

- The type of light bulb or halogen lamp used for this appliance is for household appliances only. Do not use it for house lighting.
- Before replacing the lamp, disconnect the appliance from the power supply.
- Only use lamps with the same specifications.

2.6 Service

- To repair the appliance contact an Authorised Service Centre.
- Use original spare parts only.

2.7 Disposal

WARNING!
Risk of injury or suffocation.

- Disconnect the appliance from the mains supply.
- Cut off the mains electrical cable close to the appliance and dispose of it.
- Remove the door catch to prevent children or pets from becoming trapped in the appliance.

3. INSTALLATION

WARNING!
Refer to Safety chapters.

3.1 Technical data

Dimensions	
Height	894 - 912 mm
Width	600 mm
Depth	600 mm

3.2 Location of the appliance

You can install your freestanding appliance with cabinets on one or two sides and in the corner.

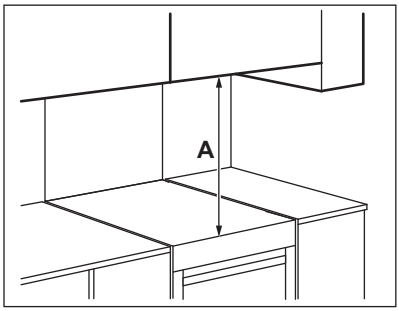

Minimum distances

Dimension	mm
A	685

3.3 Levelling of the appliance

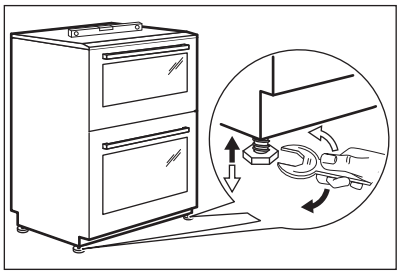

Use small feet on the bottom of appliance to set the appliance top surface level with other surfaces.

3.4 Electrical installation

WARNING!
The manufacturer is not responsible if you do not follow the safety precautions from Safety chapters.

This appliance is supplied without a main plug or a main cable.

Applicable types of cables for different phases:

Phase	Min. size cable
1	3x6.0 mm²
3 with neutral	5x1.5 mm²

WARNING!
The power cable must not touch the part of the appliance shaded in the illustration.

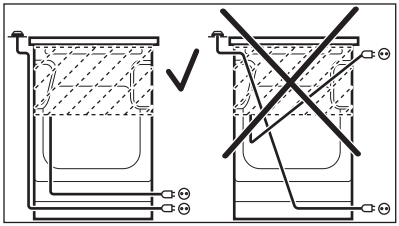

3.5 Covering terminal board

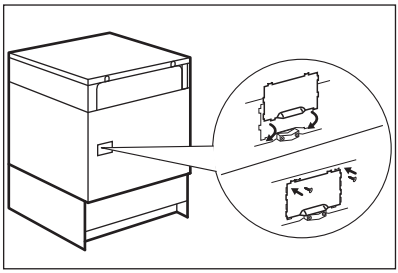

- The recommended cross-section area is six square millimetres (6 mm²).
- When you refit the mains terminal cover, make sure that the lower tabs are located inside the bottom edge of the aperture, before you fix the two

screws into the top edge of the mains terminal cover.
- Make sure that the cover is securely fastened.

To open the cover of terminal board obey the procedure in opposite sequence.

3.6 Terminal board

Do not remove blanking plates.

Make sure that the links are fitted as shown.

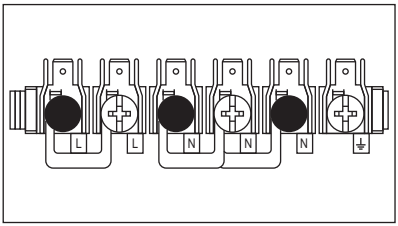

4. PRODUCT DESCRIPTION

4.1 General overview

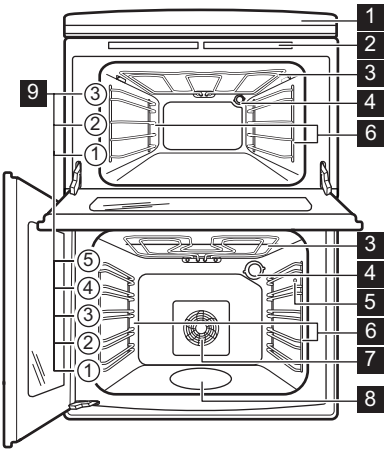

1 Control panel and hob
2 Air vents for the cooling fan
3 Heating element
4 Lamp
5 Socket for the core temperature sensor
6 Shelf support, removable
7 Fan
8 Cavity embossment
9 Shelf positions

4.2 Cooking surface layout

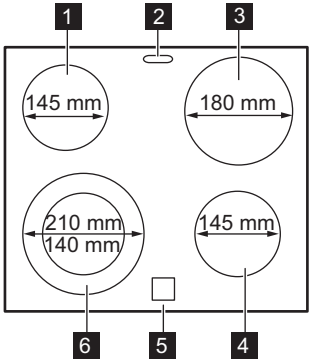

1 Cooking zone 1200 W
2 Steam outlet - number and position depends on the model
3 Cooking zone 1800 W
4 Cooking zone 1200 W
5 Residual heat indicator
6 Cooking zone 1000 / 2200 W

4.3 Cooker control panel

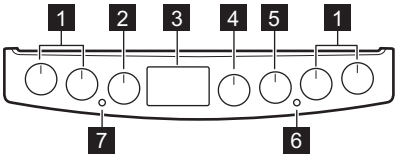

1 Knobs for the hob
2 Knob for the top oven functions
3 Display
4 Knob for the main oven functions
5 Knob for the main oven temperature
6 Temperature indicator / symbol for the main oven
7 Temperature indicator / symbol for the top oven

4.4 Accessories

- **Wire shelf**
  For cookware, cake tins, roasts.
- **Grill- / Roasting pan**
  To bake and roast or as pan to collect fat.
- **Trivet**
  For roasting and grilling.

Use the trivet only with the Grill- / roasting pan.

- **Core temperature sensor**
  To measure how far the food is cooked.
- **Telescopic runners**
  For shelves and trays.

5. BEFORE FIRST USE

WARNING!
Refer to Safety chapters.

5.1 Initial Cleaning

Remove all accessories and removable shelf supports from the oven.

Refer to "Care and cleaning" chapter.

Clean the oven and the accessories before first use.
Put the accessories and the removable shelf supports back to their initial position.

5.2 Setting the time

You must set the time before you operate the oven.

Only the top oven works without the set time.

The flashes when you connect the appliance to the electrical supply, when there was a power cut or when the timer is not set.

Press the + or — to set the correct time.
After approximately five seconds, the flashing stops and the display shows the time of day you set.

5.3 Changing the time

You cannot change the time of day if the Duration or End function operates.

Press again and again until the indicator for the Time of Day function flashes.

To set a new time, refer to "Setting the time".

5.4 Preheating

Preheat the empty oven before first use.

Preheat the two ovens. Heat up one oven at a time. Set the functions listed below, if applicable.

1. Set the function and the maximum temperature.
2. Let the oven operate for 1 hour.
3. Set the function and set the maximum temperature.
4. Let the oven operate for 15 minutes.
5. Set the function and set the maximum temperature.
6. Let the oven operate for 15 minutes.
7. Turn off the oven and let it cool down.

Accessories can become hotter than usual. The oven can emit an odour and smoke. Make sure that the airflow in the room is sufficient.

6. HOB - DAILY USE

WARNING!
Refer to Safety chapters.

6.1 Heat setting

Symbols	Function
0	Off position
◎	Double zone
1 - 9	Heat settings

Use the residual heat to decrease energy consumption. Deactivate the cooking zone approximately 5 - 10 minutes before the cooking process is completed.

Turn the knob for the selected cooking zone to a necessary heat setting.

To complete the cooking process, turn the knob to the off position.

6.2 Activating and deactivating the outer rings

You can adjust the surface you cook to the dimension of the cookware.

To activate the outer ring: turn the knob clockwise through a light resistance to ◎. Then turn the knob counterclockwise to the correct heat setting.

To deactivate the outer ring: turn the knob to the off position. The indicator goes out.

6.3 Residual heat indicator

WARNING!
There is a risk of burns from residual heat.

The indicator comes on when a cooking zone is hot, but it does not function if mains power is disconnected.

7. HOB - HINTS AND TIPS

WARNING!
Refer to Safety chapters.

7.1 Cookware

The bottom of the cookware must be as thick and flat as possible.
Ensure pan bases are clean and dry before placing on the hob surface.

Cookware made of enamelled steel and with aluminium or copper bottoms can cause a colour change on the glass-ceramic surface.

7.2 Examples of cooking applications

The data in the table is for guidance only.

Heat setting	Use to:	Time (min)	Hints
1	Keep cooked food warm.	as necessary	Put a lid on the cookware.
1 - 2	Hollandaise sauce, melt: butter, chocolate, gelatine.	5 - 25	Mix from time to time.
1 - 2	Solidify: fluffy omelettes, baked eggs.	10 - 40	Cook with a lid on.
2 - 3	Simmer rice and milkbased dishes, heat up ready-cooked meals.	25 - 50	Add at least twice as much liquid as rice, mix milk dishes halfway through the procedure.
3 - 4	Steam vegetables, fish, meat.	20 - 45	Add a couple of tablespoons of liquid.
4 - 5	Steam potatoes.	20 - 60	Use max. ¼ l of water for 750 g of potatoes.
4 - 5	Cook larger quantities of food, stews and soups.	60 - 150	Up to 3 l of liquid plus ingredients.
6 - 7	Gentle fry: escalope, veal cordon bleu, cutlets, rissoles, sausages, liver, roux, eggs, pancakes, doughnuts.	as necessary	Turn halfway through.
7 - 8	Heavy fry, hash browns, loin steaks, steaks.	5 - 15	Turn halfway through.
9	Boil water, cook pasta, sear meat (goulash, pot roast), deep-fry chips.		

8. HOB - CARE AND CLEANING

WARNING!
Refer to Safety chapters.

8.1 General information

- Clean the hob after each use.
- Always use cookware with a clean base.
- Scratches or dark stains on the surface have no effect on how the hob operates.
- Use a special cleaner suitable for the surface of the hob.
- Use a special scraper for the glass.

8.2 Cleaning the hob

- **Remove immediately:** melted plastic, plastic foil, sugar and food with sugar, otherwise, the dirt can cause damage to the hob. Take care to avoid burns. Use a special hob scraper on the glass surface at an acute angle and move the blade on the surface.
- **Remove when the hob is sufficiently cool:** limescale rings, water rings, fat stains, shiny metallic discoloration. Clean the hob with a moist cloth and a non-abrasive detergent. After cleaning, wipe the hob dry with a soft cloth.
- **Remove shiny metallic discoloration:** use a solution of water with vinegar and clean the glass surface with a cloth.

9. OVEN - DAILY USE

WARNING!
Refer to Safety chapters.

9.1 Top oven functions

Symbol	Oven function	Application
0	Off position	The oven is off.
	Oven Lamp	To turn on the lamp without a cooking function.
100 - 250	Conventional Cooking	To bake and roast food on one shelf position.
	Dual Circuit Grill	To grill food items in medium quantities in the middle of the shelf. To make toasts.
	Full Grill	To grill flat food and to toast bread.

9.2 Main oven functions

Symbol	Oven function	Application
	Off position	The oven is off.
	Full Grill	To grill flat food and to toast bread.
	Conventional Cooking	To bake and roast food on one shelf position.
	Steam Bake	To add humidity during the cooking. To get the right colour and crispy crust during baking. To give more juiciness during reheating.
	Thermaflow®	To bake on up to two shelf positions at the same time and to dry food.
	Thermal Grilling	To roast larger meat joints or poultry with bones on one shelf position. Also to make gratins and to brown.
	Fan cooking	To roast or roast and bake food with the same cooking temperature on more than one shelf position, without flavour transference.
	Bottom Heat	To bake cakes with crispy bottom and to preserve food.
	Moist Fan Baking	This function is designed to save energy during cooking. For the cooking instructions refer to "Hints and tips" chapter, Moist Fan Baking. The oven door should be closed during cooking so that the function is not interrupted and to ensure that the oven operates with the highest energy efficiency possible. When you use this function, the temperature in the cavity may differ from the set temperature. The heating power may be reduced. For general energy saving recommendations refer to "Energy Efficiency" chapter, Energy Saving. This function was used to comply with the energy efficiency class according to EN 60350-1.

9.3 Activating and deactivating the top / main oven

It depends on the model if your appliance has knob symbols, indicators or lamps:
- The indicator comes on when the oven heats up.
- The lamp comes on when the oven operates.
- The symbol shows whether the knob controls one of the cooking zones, the oven functions or the temperature.

1. Turn the knob for the top / main oven functions to select an oven function.
2. Turn the knob for the temperature to select a temperature.
3. To deactivate the oven turn the knob for the top / main oven functions to the off position.

9.4 Activating the function: Steam Bake

This function allows to have an improvement of humidity during the cooking.

WARNING!
Risk of burns and damage to the appliance.

Released humidity can cause burns:

- Do not open the appliance door when using the function: Steam Bake.
- Open the appliance door with care after using the function: Steam Bake.

Refer to “Hints and tips” chapter.

1. Open the oven door.
2. Fill the cavity embossment with tap water.
   The maximum capacity of the cavity embossment is 250 ml.
   Fill the cavity embossment with water only when the oven is cold.
3. Turn the knob for the function: Steam Bake.
4. Turn the knob for the temperature to select a temperature.
5. Put food in the appliance and close the oven door.

CAUTION!
Do not refill the cavity embossment with water during cooking or when the oven is hot.

6. To deactivate the appliance, turn the knobs for the oven functions and temperature to the off position.
7. Remove water from the cavity embossment.

WARNING!
Make sure that the appliance is cool before you remove the remaining water from the cavity embossment.

9.5 Cooling fan

When the oven operates, the cooling fan turns on automatically to keep the surfaces of the oven cool. If you turn off the oven, the cooling fan can continue to operate until the oven cools down.

9.6 Using the core temperature sensor

The core temperature sensor measures the core temperature of the meat.

There are two temperatures to be set:

- The oven temperature. Refer to the table for roasting.
- The core temperature. Refer to the table for the core temperature sensor.

CAUTION!
Only use the core temperature sensor supplied with the appliance, or genuine replacement parts.

1. Put the point of the core temperature sensor into the centre of the meat.
2. Put the plug of the core temperature sensor into the socket on the side of

the appliance. The indicator for the core temperature sensor flashes.

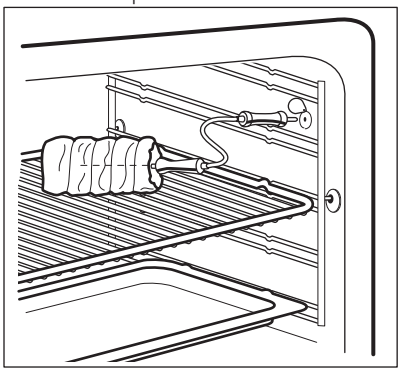

3. Press the button + or − to set the core temperature.
   You can set the temperature from 30 °C to 99 °C. Refer to values in the table.
4. Set the oven function and the oven temperature.
5. Press a button to stop the signal. An acoustic signal sounds for two minutes, when the meat is at the set core temperature.
6. Deactivate the appliance.
7. Remove the plug of the core temperature sensor from the socket. Remove the meat from the appliance.

If the meat is not cooked to your satisfaction, do the above steps again and set a higher core temperature.

You can change the temperature at any time during the cooking. Press to change the set core temperature.

WARNING!
Be careful when you remove the tip and plug of the core temperature sensor. The core temperature sensor is hot. There is a risk of burns.

9.7 Inserting the oven accessories

Deep pan:

Push the deep pan between the guide bars of the shelf support.

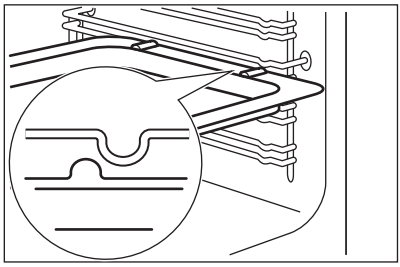

Wire shelf and the deep pan together:

Push the deep pan between the guide bars of the shelf support and the wire shelf on the guide bars above.

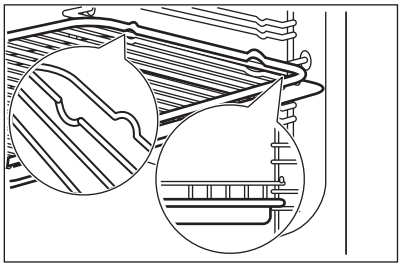

- All accessories have small indentations at the top of the right and left side to increase safety. The indentations are also anti-tip devices.
- The high rim around the shelf is a device which prevents cookware from slipping.

9.8 Trivet and Grill- / Roasting pan

WARNING!
Be careful when you remove the accessories from a hot oven. There is a risk of burns.

You can use the trivet to roast larger pieces of meat or poultry on one shelf position.

1. Put the trivet into the deep pan so that the supports of the wire shelf point up.

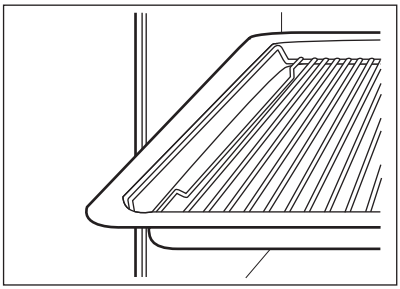

2. Put the deep pan into the oven on the necessary shelf position.

You can use the trivet to grill flat dishes in large quantities and to toast.

1. Put the trivet into the deep pan so that the supports of the wire shelf point down.

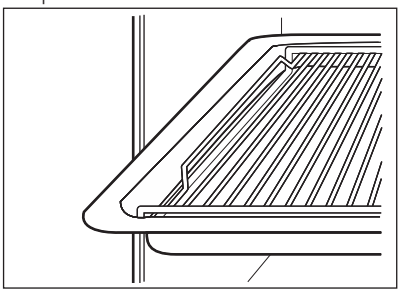

2. Put the deep pan into the oven on the necessary shelf position.

9.9 Telescopic runners - inserting the oven accessories

Keep the installation instructions for the telescopic runners for future use.

CAUTION!
Only use the telescopic runners in the main oven.

With telescopic runners you can put in and remove the shelves more easily.

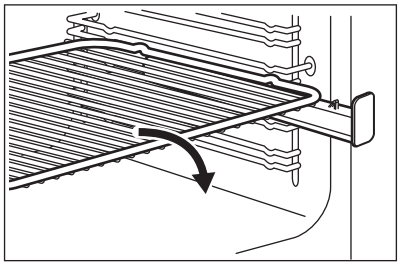

Put the wire shelf on the telescopic runners so that the feet point downwards.

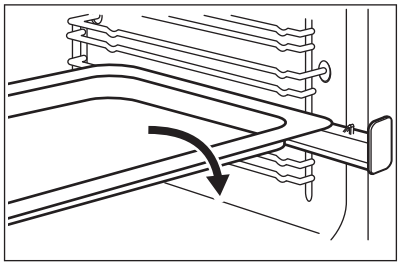

Put the baking tray or deep pan on the telescopic runners.

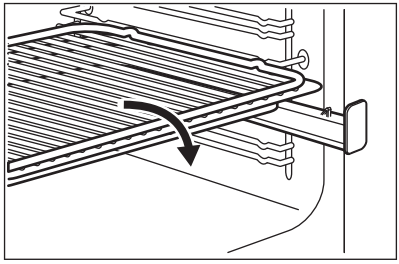

Put the wire shelf on the deep pan. Put the wire shelf and the deep pan on the telescopic runners.

10. OVEN - CLOCK FUNCTIONS

10.1 Display

The display works only with the main oven.

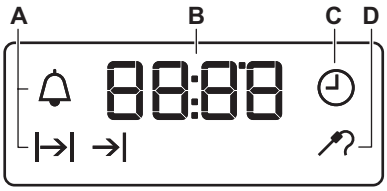

A. Clock functions
B. Timer
C. Clock function
D. Core temperature sensor indicator

10.2 Buttons

Button	Function	Description
—	MINUS	To set the time.
	CLOCK	To set a clock function.
+	PLUS	To set the time.

10.3 Clock functions table

Clock function		Application
	TIME OF DAY	To set, change or check the time of day.
|→|	DURATION	To set how long the appliance operates.
→|	END	To set when the appliance deactivates.
|→|→|	TIME DELAY	To combine DURATION and END function.
	MINUTE MINDER	To set countdown time. This function has no effect on the operation of the appliance. You can set the MINUTE MINDER at any time, also when the appliance is off.

10.4 Setting the DURATION

1. Set an oven function and temperature.
2. Press again and again until \|→\| starts to flash.
3. Press + or — to set the DURATION time.

The display shows \|→\|.

4. When the time ends, \|→\| flashes and an acoustic signal sounds. The appliance deactivates automatically.
5. Press any button to stop the acoustic signal.
6. Turn the knob for the oven functions and the knob for the temperature to the off position.

DURATION works only for the main oven.

10.5 Setting the END

1. Set an oven function and temperature.
2. Press again and again until →\| starts to flash.
3. Press + or — to set the time.

The display shows →\|.

4. When the time ends, →\| flashes and an acoustic signal sounds. The appliance deactivates automatically.
5. Press any button to stop the signal.
6. Turn the knob for the oven functions and the knob for the temperature to the off position.

The function works only for the main oven.

10.6 Setting the TIME DELAY

1. Set an oven function and temperature.
2. Press again and again until starts to flash.
3. Press + or — to set the time for DURATION.
4. Press .
5. Press + or — to set the time for END.
6. Press to confirm.

Appliance turns on automatically later on, works for the set DURATION time and stops at the set END time. At the set time an acoustic signal sounds.

7. The appliance deactivates automatically. Press any button to stop the signal.
8. Turn the knob for the oven functions and the knob for the temperature to the off position.

TIME DELAY works only for the main oven.

10.7 Setting the MINUTE MINDER

1. Press again and again until starts to flash.
2. Press + or — to set the necessary time.

The Minute Minder starts automatically after 5 seconds.

3. When the set time ends, an acoustic signal sounds. Press any button to stop the acoustic signal.
4. Turn the knob for the oven functions and the knob for the temperature to the off position.

10.8 Cancelling the clock functions

1. Press the again and again until the necessary function indicator starts to flash.
2. Press and hold —.

The clock function goes out after some seconds.

11. OVEN - HINTS AND TIPS

WARNING!
Refer to Safety chapters.

The temperature and baking times in the tables are guidelines only. They depend on the recipes and the quality and quantity of the ingredients used. Always preheat an empty oven at the temperature required for the food for 20 minutes before you start cooking.

11.1 Top oven

The top oven is the smaller of the two ovens. It has 3 shelf positions. Use it to cook smaller quantities of food. It gives especially good results when used to cook fruitcakes, sweets and savoury flants or quiche.

11.2 Main oven

The main oven is particularly suitable for cooking larger quantities of food.

11.3 Baking

- Use the lower temperature the first time.
- You can extend baking times by 10 – 15 minutes if you bake cakes on more than one shelf position.
- Cakes and pastries at different heights do not always brown equally. There is no need to change the temperature setting if an unequal browning occurs. The differences equalize during baking.
- Trays in the oven can twist during baking. When the trays become cold again, the distortions disappear.

11.4 Tips on baking

Baking results	Possible cause	Remedy
The bottom of the cake is not browned sufficiently.	The shelf position is incorrect.	Put the cake on a lower shelf.
The cake sinks and becomes soggy, lumpy or streaky.	The oven temperature is too high.	The next time you bake, set a slightly lower oven temperature.
	The baking time is too short.	Set a longer baking time. You cannot decrease baking times by setting higher temperatures.
	There is too much liquid in the mixture.	Use less liquid. Be careful with mixing times, especially if you use a mixing machine.
The cake is too dry.	The oven temperature is too low.	The next time you bake, set a higher oven temperature.
	The baking time is too long.	The next time you bake, set a shorter baking time.
The cake browns unevenly.	The oven temperature is too high and the baking time is too short.	Set a lower oven temperature and a longer baking time.
	The mixture is unevenly distributed.	Spread the mixture evenly on the baking tray.
The cake is not ready in the baking time given.	The oven temperature is too low.	The next time you bake, set a slightly higher oven temperature.

11.5 Conventional Baking - Top Oven

Food	Temperature (°C)	Time (min)	Shelf position
Biscuits	170 - 190	10 - 20	2
Bread	200 - 220	30 - 35	2
Bread rolls / buns	200 - 220	10 - 15	2
Cakes: Small & Queen	160 - 180	18 - 25	2
Cakes: Sponges	160 - 175	20 - 30	2
Cakes: Victoria Sandwich	160 - 170	18 - 25	2
Cakes: Madeira	140 - 150	75 - 90	2
Cakes: Rich Fruit	140 - 150	120 - 150	2
Cakes: Gingerbread	140 - 150	80 - 90	2

Food	Temperature (°C)	Time (min)	Shelf position
Cakes: Meringues	90 - 100	150 - 180	2
Cakes: Flapjack	160 - 170	25 - 30	2
Cakes: Shortbread	130 - 150	45 - 60	2
Cakes: Apple Pie	170 - 180	50 - 60	2
Casseroles: Beef / Lamb	160 - 170	150 - 180	2
Casseroles: Chicken	160 - 180	80 - 90	2
Convenience Foods	Follow manufacturer`s instructions.		2
Fish	170 - 190	20 - 30	2
Fish Pie (Potato Topped)	190 - 200	20 - 30	2
Fruit Pies, Crumbles	190 - 200	30 - 50	2
Milk Puddings	150 - 170	90 - 120	2
Pasta Lasagne etc.	170 - 180	40 - 50	2
Pastry: Choux	180 - 190	30 - 40	2
Pastry: Eclairs, Profiteroles	180 - 190	30 - 40	2
Pastry: Flaky / Puff Pies	210 - 220	30 - 40	2
Shortcrusts: Mince Pies	190 - 200	15 - 20	2
Shortcrusts: Meat Pies	190 - 210	25 - 35	2
Shortcrusts: Quiche, Tarts, Flans	180 - 200	25 - 50	2
Scones	220 - 230	8 - 12	3
Shepard`s Pie	190 - 200	30 - 40	2
Souffles	170 - 180	20 - 30	2
Vegetables: Baked Jacket Potatos	180 - 190	60 - 90	2
Vegetables: Roast Potatos	180 - 190	60 - 90	2
Yorkshire Pudding Large	220 - 210	25 - 40	2
Yorkshire Pudding Individual	210 - 220	15 - 25	2
Roasting Meat, Poultry	Refer to the Roasting table.		2

11.6 Thermaflow® Baking - Main Oven

Shelf positions are not critical but ensure that the oven accessories are evenly spaced when more than one is used.

Food	Temperature (°C)	Time (min)	Shelf position
Biscuits	180 - 190	10 - 20	1 – 3
Bread	190 - 210	30 - 35	2
Cakes: Small & Queen	150 - 170	18 - 25	1 – 3
Cakes: Sponges	160 - 170	20 - 25	3
Cakes: Madeira	140 - 160	60 - 80	3
Cakes: Rich Fruit	130 - 140	120 - 150	3
Cakes: Christmas	130 - 140	180 - 270	3
Cakes: Apple Pie	160 - 170	50 - 60	3
- Shortbread	130 - 150	45 - 60	1 – 3
Fish	160 - 180	30 - 40	3
Fruit Pies, Crumbles	170 - 180	30 - 50	3
Milk Puddings	140 - 160	60 - 90	3
Pastry: Choux	180 - 190	30 - 40	3
Pastry: Shortcrust	180 - 190	25 - 35	3
Pastry: Flaky	180 - 190	30 - 40	3
Pastry: Puff	Follow manufacturer`s instructions. Reduce the temperature for Fan oven by 20 °C.		3
Plate Tarts	180 - 190	25 - 45	3
Quiches / Flans	170 - 180	25 - 45	3
Scones	210 - 230	8 - 12	1 – 3
Roasting: Meat, Poultry	160 - 180	Refer to the Roasting table.	2

11.7 Moist Fan Baking

Food	Temperature (°C)	Time (min)	Shelf position
Lasagne	190 - 210	60 - 80	3
Cannelloni	180 - 200	70 - 85	3
Potato gratin	190 - 210	70 - 85	3
Pasta gratin	190 - 210	45 - 55	3
Moussaka	180 - 200	60 - 75	3
White bread	190 - 210	55 - 70	3
Rice pudding	180 - 200	45 - 55	2
Bread pudding	190 - 210	55 - 70	3
Apple cake	180 - 190	60 - 75	2

11.8 Steam Bake

Bakery

Food	Temperature (°C)	Water in the cavity embossment (ml)	Preheating time (min)	Time (min)	Shelf position
White bread	180	150	10	35 - 45	2
Bread rolls	200	150	5	20 - 25	2
Focaccia	190	150	10	20 - 25	2
Homemade pizza	230	100	10	15 - 20	2
Cookies, scones, croissant	160	150	10	10 - 20	2
Plum cake, cinnamon rolls	160	150	10	70 - 80	2

Frozen foods

Food	Temperature (°C)	Water in the cavity embossment (ml)	Preheating time (min)	Time (min)	Shelf position
Pizza	200	100	10	15 - 20	2
Croissant	160	50	10	15 - 30	2
Lasagne	200	200	10	35 - 45	2

Food regeneration

Food	Temperature (°C)	Water in the cavity embossment (ml)	Preheating time (min)	Time (min)	Shelf position
White bread	110	100	10	15 - 25	2
Bread rolls	110	100	10	10 - 20	2
Homemade pizza	110	100	10	15 - 25	2
Focaccia	110	100	10	15 - 25	2
Vegetables	110	100	10	15 - 25	2
Rice	110	100	10	15 - 25	2
Pasta	110	100	10	15 - 25	2
Meat	110	100	10	15 - 25	2

Roasting

Food	Temperature (°C)	Water in the cavity embossment (ml)	Preheating time (min)	Time (min)	Shelf position
Chicken	210	200	-	65 - 75	2
Half chicken	210	200	-	35 - 50	2
Roast pork	180	200	-	65 - 70	2
Roast beef 1 - 1,5 kg 1. Rare 2. Medium 3. Well done	200	200	-	1. 50 - 55 2. 60 - 65 3. 65 - 75	2
Roast turkey	200	200	-	70 - 85	2

11.9 Roasting

Use heat-resistant ovenware.

Roast large roasting joints directly in the tray or on the wire shelf placed above the tray.

Put some water in the tray to prevent the meat juices or fat from burning.

Meat with crackling can be roasted in the roasting tin without the lid.

Turn the roast after 1/2 - 2/3 of the cooking time.

To keep meat more succulent:
- roast lean meat in the roasting tin with the lid or use roasting bag.
- baste large roasts and poultry with their juices several times during roasting.

11.10 Thermaflow® - Main Oven

Roasting

Food	Temperature (°C)	Time (min)
Beef / Beef boned	170 - 190	20 - 35 minutes per 0.5 kg (1 lb) and 20 - 30 minutes over
Mutton / Lamb	170 - 190	20 - 35 minutes per 0.5 kg (1 lb) and 25 - 35 minutes over
Pork / Veal / Ham	170 - 190	30 - 40 minutes per 0.5 kg (1 lb) and 30 - 40 minutes over
Chicken	180 - 200	20 - 25 minutes per 0.5 kg (1 lb) and 20 minutes over
Turkey / Goose	170 - 190	15 - 20 minutes per 0.5 kg (1 lb) up to 3.5 kg (7 lb) then 10 minutes per 0.5 kg (1 lb) over 3.5 kg (7 lb)
Duck	180 - 200	25 - 35 minutes per 0.5 kg (1 lb) and 25 - 30 minutes over
Pheasant	170 - 190	35 - 40 minutes per 0.5 kg (1 lb) and 35 - 40 minutes over
Rabbit	170 - 190	20 minutes per 0.5 kg (1 lb) and 20 minutes over

11.11 Core temperature sensor table

Beef

Food	Food core temperature (°C)	Shelf position
Roast beef	55 - 65	2 - 3
Rump steak - browning	55 - 65	2 - 3
Rump steak - roasting	55 - 65	2 - 3
Roast beef	75 - 80	1 - 2

Veal

Food	Food core temperature (°C)	Shelf position
Fillet of beef	65	2 - 3

Lamb

Food	Food core temperature (°C)	Shelf position
Leg / shoulder / saddle	90	2

Pork

Food	Food core temperature (°C)	Shelf position
Roast pork	80	2 - 3
Neck fillets	75 - 80	2 - 3
Ham	70 - 75	1 - 2

Poultry

Food	Food core temperature (°C)	Shelf position
Turkey breast	75 - 80	2 - 3

11.12 Grilling in general

WARNING!
Always grill with the oven door closed.

- **Always grill with the maximum temperature setting.**
- Set the shelf into the shelf position as recommended in the grilling table.
- Always set the deep pan to collect the fat into the first shelf position.
- Grill only flat pieces of meat or fish.

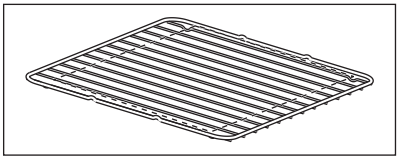

The grilling area is set in centre of the shelf.

11.13 Dual Grill - Top Oven

Food	Time (min)	Shelf position
Bacon Rashers	5 - 6	3
Beefburgers	10 - 20	3
Chicken Joints	20 - 40	2
Chops - Lamb	15 - 25	2 - 3
Chops - Pork	20 - 25	2 - 3
Fish - Whole / Trout / Makarel	10 - 12	2
Fillets - Plaice / Cod	4 - 6	2
Kebabs	12 - 18	2 - 3
Kidneys - Lamb / Pig	6 - 10	2 - 3
Sausages	20 - 30	3
Steaks: Rare	4 - 6	3
Steaks: Medium	6 - 8	3

Food	Time (min)	Shelf position
Steaks: Well Done	12 - 15	3
Toasted Sandwiches	3 - 4	3

11.14 Information for test institutes

Main oven

Food	Function	Temperature (°C)	Time (min)	Accessories	Shelf position
Small cakes (20 small cakes per tray)	Thermaflow®	150	20 - 30	Tray	3
Small cakes (20 small cakes per tray)	Thermaflow®	150	20 - 35	Tray	1 / 4
Apple pie, 2 tins (ø 20 cm) on the grid, diagonally shifted [1)]	Steam Bake	160	80 - 100	Grid	2
Fatless sponge cake, 1 tin (ø 26 cm) on the grid	Thermaflow®	150	25 - 35	Grid	2
Fatless sponge cake, 1 tin (ø 26 cm) on the grid	Thermaflow®	150	30 - 40	Grid	1 / 4
Shortbread/Pastry strip	Thermaflow®	140	20 - 30	Tray	3
Shortbread/Pastry strip	Thermaflow®	140	15 - 25	Tray	1 / 4

1) Add 200 ml of water to the cavity embossment.

Top oven

Food	Function	Temperature (°C)	Time (min)	Accessories	Shelf position
Small cakes (20 small cakes per tray)	Conventional Cooking	150	20 - 30	Tray	2
Apple pie, 2 tins (ø 20 cm) on the grid, diagonally shifted	Conventional Cooking	170	20 - 35	Grid	1
Fatless sponge cake, 1 tin (ø 26 cm) on the grid	Conventional Cooking	150	80 - 100	Grid	2

Food	Function	Temperature (°C)	Time (min)	Accessories	Shelf position
Shortbread/Pastry strip	Conventional Cooking	140	25 - 35	Tray	2
Toast	Full Grill	-	30 - 40	Grid	2
Beef burger	Dual Circuit Grill	-	20 - 30	Grid / Roasting pan	2

12. OVEN - CARE AND CLEANING

WARNING!
Refer to Safety chapters.

12.1 Notes on cleaning

Clean the front of the oven with a soft cloth with warm water and a mild cleaning agent.

To clean metal surfaces, use a dedicated cleaning agent.

Clean the oven interior after each use. Fat accumulation or other food remains may result in a fire. The risk is higher for the grill pan.

Clean all accessories after each use and let them dry. Use a soft cloth with warm water and a cleaning agent. Do not clean the accessories in the dishwasher.

Clean stubborn dirt with a special oven cleaner. Do not apply oven cleaner on the catalytic surfaces.

If you have nonstick accessories, do not clean them using aggressive agents, sharp-edged objects or a dishwasher. It can cause damage to the nonstick coating.

Clean the moisture from the cavity after each use.

12.2 Stainless steel or aluminium ovens

Clean the oven door with a damp cloth or sponge only. Dry it with a soft cloth.

Do not use steel wool, acids or abrasive materials as they can damage the oven surface. Clean the oven control panel with the same precautions.

12.3 Catalytic cleaning

CAUTION!
Do not clean the catalytic surface with oven sprays, abrasive cleaning agents, soap or other cleaning agents. This will damage the catalytic surface.

Spots or discolouration of the catalytic surface have no effect on catalytic properties.

WARNING!
Keep children away when you clean the oven at a high temperature. The oven surface becomes very hot and there is a risk of burns.

CAUTION!
Always turn the oven light on while using the catalytic cleaning (if applicable).

Before activating the catalytic cleaning remove all the accessories from the oven.

The walls with a catalytic coating are self-cleaning. They absorb fat which collects on the walls while the appliance operates.

To support the self-cleaning procedure, heat the empty oven on a regular basis.

1. Clean the oven floor with warm water and washing up liquid, then dry it.
2. Set the oven temperature to 250 °C and let the oven operate for 1 hour.
3. When the appliance is cool, clean it with a soft and moist sponge.

12.4 Cleaning the cavity embossment

The cleaning procedure removes limestone residue from the cavity embossment after cooking with steam.

For the function: Steam Bake we recommend to do the cleaning procedure at least every 5 - 10 cooking cycles.

1. Put 250 ml of white vinegar into the cavity embossment at the bottom of the oven.
   Use maximum 6% vinegar without any additives.
2. Let the vinegar dissolve the residual limestone at the ambient temperature for 30 minutes.
3. Clean the cavity with warm water and a soft cloth.

12.5 Removing the shelf supports

To clean the oven, remove the shelf supports.

1. Pull the front of the shelf support away from the side wall.

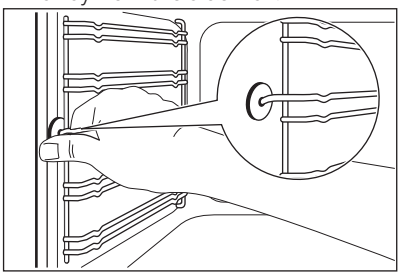

2. Pull the rear end of the shelf support away from the side wall and remove it.

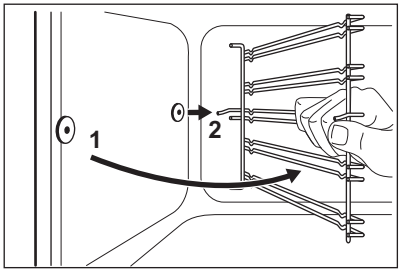

The retaining pins on the telescopic runners must point to the front.

Install the shelf supports in the opposite sequence.

CAUTION!
Make sure that the longer fixing wire is in the front. The ends of the two wires must point to the rear. Incorrect installation can cause damage to the enamel.

12.6 Removing and cleaning the door glasses - top oven

The door glass in your product can be different in type and shape from the examples you see in the image. The number of glasses can also be different.

1. Open the door.
2. Hold the door trim on the top edge of the door at the two sides and push inwards to release the clip seal.

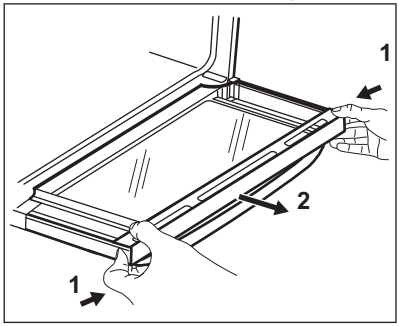

3. Pull the door trim to the front to remove it.
4. Remove the glass panels.

To install the panels, do the same steps in reverse.

12.7 Removing and cleaning the door glasses - main oven

The door glass in your product can be different in type and shape from the example you see in the image. The number of glasses can also be different.

1. Push the door trim at one side to remove it.

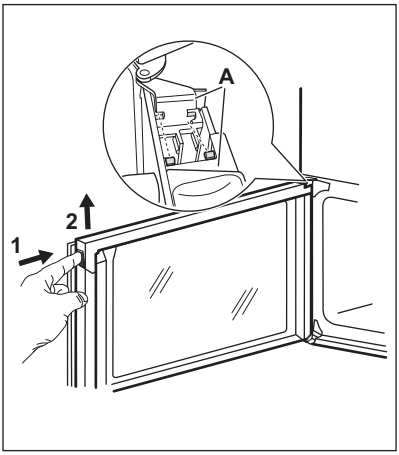

2. Pull up the trim.
3. Remove the glass panels.

To replace the glass panels, do the same steps in reverse. Before you lower the trim, attach the A trim part to the door. Refer to the image.

12.8 Replacing the lamp

WARNING!
Risk of electric shock.
The lamp can be hot.

1. Turn off the oven.

Wait until the oven is cooled down.

2. Disconnect the oven from the mains.
3. Put a cloth on the bottom of the cavity.

The back lamp

The lamp glass cover is at the back of the cavity.

1. Turn the lamp glass cover counterclockwise to remove it.
2. Clean the glass cover.
3. Replace the oven lamp with a suitable 300 °C heat-resistant oven lamp.
   Use the same oven lamp type.
4. Install the glass cover.

13. TROUBLESHOOTING

WARNING!
Refer to Safety chapters.

13.1 What to do if...

Problem	Possible cause	Remedy
You cannot activate the appliance.	The appliance is not connected to an electrical supply or it is connected incorrectly.	Check if the appliance is correctly connected to the electrical supply.

Problem	Possible cause	Remedy
You cannot activate the appliance.	The fuse is blown.	Make sure that the fuse is the cause of the malfunction. If the fuse is blown again and again, contact a qualified electrician.
Residual heat indicator does not come on.	The zone is not hot because it operated only for a short time.	If the zone operated sufficiently long to be hot, speak to an Authorised Service Centre.
You cannot activate the outer ring.		Activate the inner ring first.
The oven does not heat up.	The oven is deactivated.	Activate the oven.
The oven does not heat up.	The clock is not set.	Set the clock.
The oven does not heat up.	The necessary settings are not set.	Make sure that the settings are correct.
The lamp does not operate.	The lamp is defective.	Replace the lamp.
The display shows "12.00".	There was a power cut.	Reset the clock.
The display shows F11.	The plug of the core temperature sensor is not correctly installed into the socket.	Put the plug of the core temperature sensor as far as possible into the socket.
Steam and condensation settle on the food and in the cavity of the oven.	You left the dish in the oven for too long.	Do not leave the dishes in the oven for longer than 15 - 20 minutes after the cooking process ends.
There is no good cooking performance using the Steam Bake function.	You did not fill the cavity embossment with water.	Refer to "Activating the Steam Bake function".
The water in the cavity embossment does not boil.	The temperature is too low.	Set the temperature at least to 110°C. Refer to "Hints and Tips" chapter.
The water comes out of the cavity embossment.	There is to much water in the cavity embossment.	Deactivate the oven and make sure that the appliance is cold. Wipe the water with a cloth or sponge. Add the correct amount of water to the cavity embossment. Refer to "Activating the Steam Bake function".

13.2 Service data

If you cannot find a solution to the problem yourself, contact your dealer or an Authorised Service Centre.

The necessary data for the service centre is on the rating plate. The rating plate is on the front frame of the oven cavity. Do not remove the rating plate from the oven cavity.

We recommend that you write the data here:	
Model (MOD.)	.....
Product number (PNC)	.....
Serial number (S.N.)	.....

14. ENERGY EFFICIENCY

14.1 Product information for hob according to EU 66/2014

Model identification	CCB6761ACB CCB6761ACM	
Type of hob	Hob inside Freestanding Cooker	
Number of cooking zones	4	
Heating technology	Radiant Heater	
Diameter of circular cooking zones (Ø)	Left front Left rear Right front Right rear	14.0 cm / 21.0 cm 14.5 cm 14.5 cm 18.0 cm
Energy consumption per cooking zone (EC electric cooking)	Left front Left rear Right front Right rear	178.9 Wh/kg 181.8 Wh/kg 181.8 Wh/kg 192.3 Wh/kg
Energy consumption of the hob (EC electric hob)		183.7 Wh/kg

EN 60350-2 - Household electric cooking appliances - Part 2: Hobs - Methods for measuring performance.

14.2 Hob - Energy saving

You can save energy during everyday cooking if you follow below hints.

- When you heat up water, use only the amount you need.
- If it is possible, always put the lids on the cookware.
- Before you activate the cooking zone put the cookware on it.
- The cookware bottom should have the same diameter as the cooking zone.
- Put the smaller cookware on the smaller cooking zones.
- Put the cookware directly in the centre of the cooking zone.
- Use the residual heat to keep the food warm or to melt it.

14.3 Product Fiche and information for ovens according to EU 65-66/2014

Supplier's name	AEG	
Model identification	CCB6761ACB CCB6761ACM	
Energy Efficiency Index	Top oven: 105.6 Main oven: 95.3	
Energy efficiency class	Top oven: A Main oven: A	
Energy consumption with a standard load, conventional mode	Top oven: 0.75 kWh/cycle Main oven: 0.95 kWh/cycle	
Energy consumption with a standard load, fan-forced mode	Top oven: not applicable Main oven: 0.82 kWh/cycle	
Number of cavities	2	
Heat source	Electricity	
Volume	Top oven: 39 l Main oven: 73 l	
Type of oven	Oven inside Freestanding Cooker	
Mass	CCB6761ACB	60.2 kg
	CCB6761ACM	60.2 kg

EN 60350-1 - Household electric cooking appliances - Part 1: Ranges, ovens, steam ovens and grills - Methods for measuring performance.

14.4 Oven - Energy saving

The oven contains features which help you save energy during everyday cooking.

General hints
Make sure that the oven door is closed properly when the oven operates. Do not open the door too often during cooking. Keep the door gasket clean and make sure it is well fixed in its position.

Use metal dishes to improve energy saving.

When possible, do not preheat the oven before you put the food inside.

When the cooking duration is longer than 30 minutes, reduce the oven temperature to minimum 3 - 10 minutes before the end of the cooking time, depending on the duration of the cooking. The residual heat inside the oven will continue to cook.

Use the residual heat to warm up other dishes.

Keep breaks between baking as short as possible when you prepare few dishes at one time.

Cooking with fan
When possible, use the cooking functions with fan to save energy.

Keep food warm
Choose the lowest possible temperature setting to use residual heat and keep a meal warm.

Moist Fan Baking
Function designed to save energy during cooking.

15. ENVIRONMENTAL CONCERNS

Recycle materials with the symbol . Put the packaging in relevant containers to recycle it. Help protect the environment and human health by recycling waste of electrical and electronic appliances. Do not dispose of appliances marked with the symbol  with the household waste. Return the product to your local recycling facility or contact your municipal office.

www.aeg.com/shop



867337949-C-252019

CE

AEG