SAFETY INSTRUCTIONS

IMPORTANT TO BE READ AND OBSERVED

Before using the appliance, read these safety instructions. Keep them nearby for future reference.
These instructions and the appliance itself provide important safety warnings, to be observed at all times. The manufacturer declines any liability for failure to observe these safety instructions, for inappropriate use of the appliance or incorrect setting of controls.
⚠ WARNING: If the hob surface is cracked, do not use the appliance - risk of electric shock.
⚠ WARNING: Danger of fire: Do not store items on the cooking surfaces.
⚠ CAUTION: The cooking process has to be supervised. A short cooking process has to be supervised continuously.
⚠ WARNING: Unattended cooking on a hob with fat or oil can be dangerous - risk of fire. NEVER try to extinguish a fire with water: instead, switch off the appliance and then cover flame e.g. with a lid or a fire blanket.
⚠ Do not use the hob as a work surface or support. Keep clothes or other flammable materials away from the appliance, until all the components have cooled down completely - risk of fire.
⚠ Very young children (0-3 years) should be kept away from the appliance. Young children (3-8 years) should be kept away from the appliance unless continuously supervised. Children from 8 years old and above and persons with reduced physical, sensory or mental capabilities or lack of experience and knowledge can use this appliance only if they are supervised or have been given instructions on safe use and understand the hazards involved. Children must not play with the appliance. Cleaning and user maintenance must not be carried out by children without supervision.
⚠ WARNING: The appliance and its accessible parts become hot during use. Care should be taken to avoid touching heating elements. Children less than 8 years of age shall be kept away unless continuously supervised.
⚠ The food must not be left in or on the product for more than one hour before or after cooking.

PERMITTED USE

⚠ CAUTION: the appliance is not intended to be operated by means of an external switching device, such as a timer, or separate remote controlled system.
⚠ This appliance is intended to be used in household and similar applications such as: staff kitchen areas in shops, offices and other working environments; farm houses; by clients in hotels, motels, bed & breakfast and other residential environments.
⚠ No other use is permitted (e.g. heating rooms).
⚠ This appliance is not for professional use. Do not use the appliance outdoors.

INSTALLATION

⚠ The appliance must be handled and installed by two or more persons - risk of injury. Use protective gloves to unpack and install - risk of cuts.
⚠ Installation, including water supply (if any), electrical connections and repairs must be carried out by a qualified technician. Do not repair or replace any part of the appliance unless specifically stated in the user manual. Keep children away from the installation site. After unpacking the appliance, make sure that it has not been damaged during transport. In the event of problems, contact the dealer or your nearest After-sales Service. Once installed, packaging waste (plastic, styrofoam parts etc.) must be stored out of reach of children - risk of suffocation. The appliance must be disconnected from the power supply before any installation operation - risk of electric shock. During installation, make sure the appliance does not damage the power cable - risk of fire or electric shock. Only activate the appliance when the installation has been completed.
⚠ Carry out all cabinet cutting operations before fitting the appliance and remove all wood chips and sawdust.
⚠ If the appliance is not installed above an oven, a separator panel (not included) must be installed in the compartment under the appliance.

ELECTRICAL WARNINGS

⚠ It must be possible to disconnect the appliance from the power supply by unplugging it if plug is accessible, or by a multi-pole switch installed upstream of the socket in accordance with the wiring rules and the appliance must be earthed in conformity with national electrical safety standards.
⚠ Do not use extension leads, multiple sockets or adapters. The electrical components must not be accessible to the user after installation. Do not use the appliance when you are wet or barefoot. Do not operate this appliance if it has a damaged power cable or plug, if it is not working properly, or if it has been damaged or dropped.
⚠ Installation using a power cable plug is not allowed unless the product is already equipped with the one provided by the Manufacturer.
⚠ If the supply cord is damaged, it must be replaced with an identical one by the manufacturer, its service agent or similarly qualified persons in order to avoid a hazard - risk of electric shock.

CLEANING AND MAINTENANCE

⚠ WARNING: Ensure that the appliance is switched off and disconnected from the power supply before performing any maintenance operation; never use steam cleaning equipment - risk of electric shock.
⚠ Do not use abrasive or corrosive products, chlorine-based cleaners or pan scourers.

DISPOSAL OF PACKAGING MATERIALS

The packaging material is 100% recyclable and is marked with the recycle symbol ♻.
The various parts of the packaging must therefore be disposed of responsibly and in full compliance with local authority regulations governing waste disposal.

DISPOSAL OF HOUSEHOLD APPLIANCES

This appliance is manufactured with recyclable or reusable materials. Dispose of it in accordance with local waste disposal regulations. For further information on the treatment, recovery and recycling of household electrical appliances, contact your local authority, the collection service for household waste or the store where you purchased the appliance. This appliance is marked in compliance with European Directive 2012/19/EU, Waste Electrical

and Electronic Equipment (WEEE) and with the Waste Electrical and Electronic Equipment regulations 2013 (as amended).
By ensuring this product is disposed of correctly, you will help prevent negative consequences for the environment and human health.

The symbol  on the product or on the accompanying documentation indicates that it should not be treated as domestic waste but must be taken to an appropriate collection center for the recycling of electrical and electronic equipment.

ENERGY SAVING TIPS

Make the most of your hot plate's residual heat by switching it off a few minutes before you finish cooking.
The base of your pot or pan should cover the hot plate completely; a container that is smaller than the hot plate will cause energy to be wasted.
Cover your pots and pans with tight-fitting lids while cooking and use as little water as possible. Cooking with the lid off will greatly increase energy consumption.
Use only flat-bottomed pots and pans.

DECLARATION OF CONFORMITY

This appliance meets Ecodesign requirements of European Regulation 66/2014 and The Ecodesign for Energy-Related Products and Energy Information (Amendment) (EU Exit) Regulations 2019 in compliance with the European standard EN 60350-2.
The information related to low power mode of the appliance in accordance with Regulation (EU) 2023/826 can be found in the following link: https://docs.emeaappliance-docs.eu.



INSTALLATION

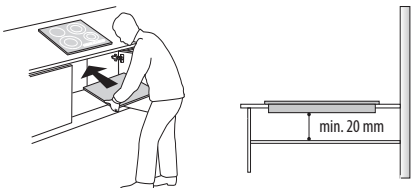

- **The cooktop must be set into a worktop at least 20 mm deep.**
- **There must be nothing between the cooktop and the oven (cross rails, brackets, etc.).**
- **Make sure the power cord is long enough to allow convenient installation.**
- **The distance between the lower face of the glass ceramic hob and the cupboard or separating panel must be at least 20 mm.**
- For built-in dimensions and installation see the picture in this paragraph.
- A minimum distance must be maintained between the hob and the hood above it. Please refer to the user manual of the hood for more informations.
- Apply the supplied gasket to the cooktop (unless it has already been fitted), after having cleaned its surface.
- **Do not install the cooktop near a dishwasher or washing machine, so that the electronic circuits do not come into contact with steam or moisture, which could damage them.**
- If an oven (from our range of ovens) is installed beneath the cooktop, make sure that it is equipped with a cooling system. If the temperature of the electronic circuits exceeds the maximum permitted temperature, the cooktop will switch off automatically; in this case, wait for a few minutes until the internal temperature of the electronic circuits reaches a tolerable level, at which point it will be possible to switch the hob on again.

PLACING THE HOB

After the electrical connection (see the chapter "Electrical connection").Position each fixing clips on the dedicated slots on the lateral sides of the hob as shown in the picture. Then push the hob inside the cut out and check that the glass is flat and parallel to the worktop. The fixing clips are designed for every type of worktop material (wood, marble, etc).

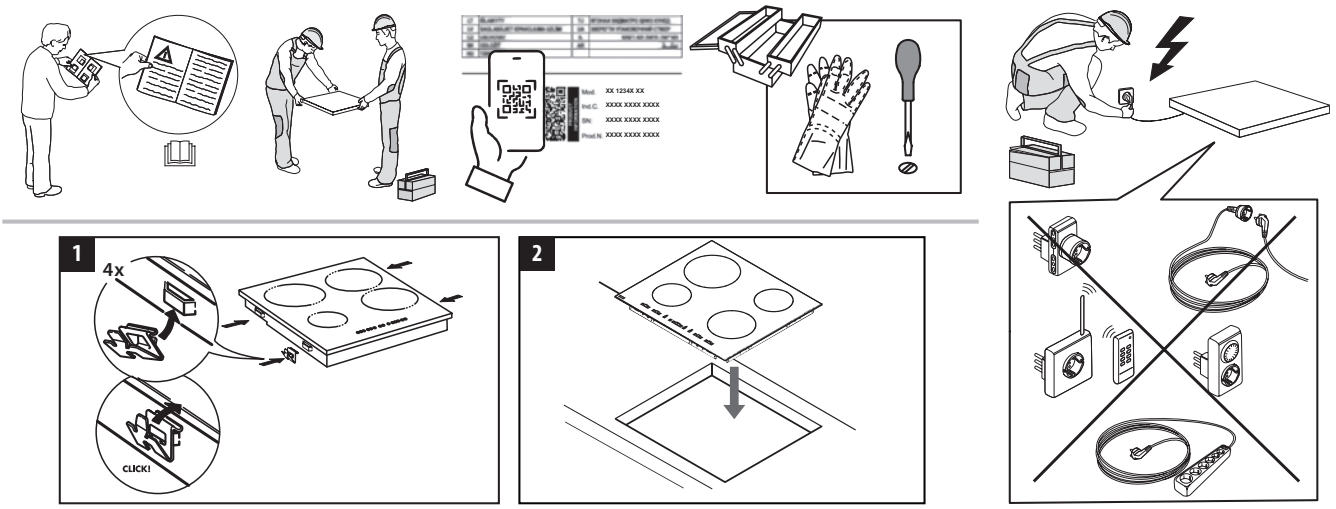

DIMENSIONS AND DISTANCES TO BE MAINTAINED

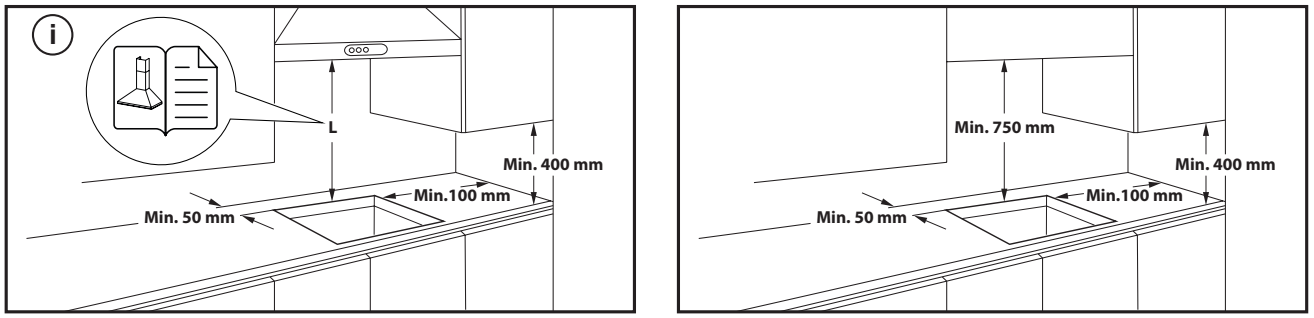

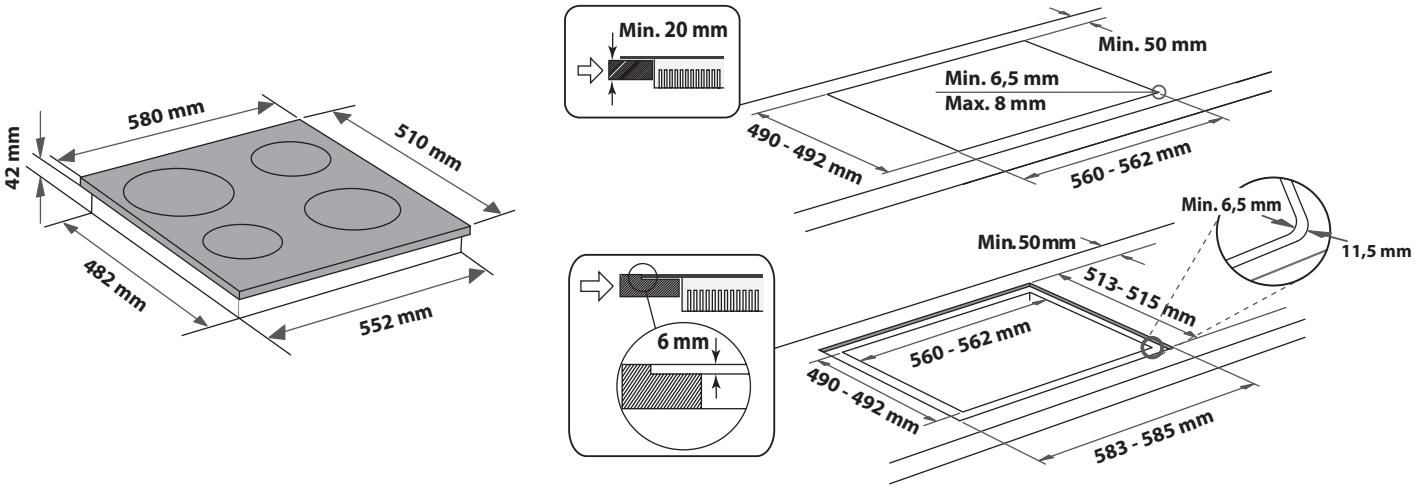

REMOVING THE HOB:

To remove the hob, first, disconnect it from the electric supply. It is strongly recommended to free the underneath part from the oven, drawer, separator, or other. It allows the technician to access the lower part of the hob to unfasten the four clips with a screwdriver, lift the hob and remove it, avoiding any worktop damage.

ELECTRICAL CONNECTION

Electrical connection must be made before connecting the appliance to the electricity supply.
The power cord is not included in the package - remember to prepare your own power cord.
Installation must be carried out by qualified personnel who know the current safety and installation regulations. Specifically, installation must be carried out in compliance with the regulations of the local electricity supply company.
Make sure the voltage specified on the data plate located on the bottom of the appliance is the same as that of the home.
Regulations require that the appliance be earthed: use conductors (including the earth conductor) of the appropriate size only.

CONNECTION TO THE TERMINAL BLOCK

For the electrical connection, use an H05RR-F or H05V2V2-F cable as specified in the table below.

SUPPLY VOLTAGE	CONDUCTORS AMOUNT x SIZE
230V ~ + ⏚	3 x 4 mm^2
230-240V ~ + ⏚	3 x 4 mm^2 (Australia only)
230V 3~ + ⏚	4 x 1,5 mm^2
400V 3N~ + ⏚	5 x 1,5 mm^2
400V 2N~ + ⏚	4 x 1,5 mm^2

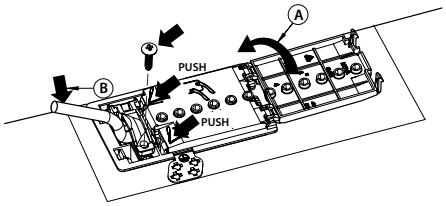

The appliance must be connected to the electricity supply by means of an all-pole disconnect switch with minimum contact gap of 3 mm.

ATTENTION: the power supply cable must be long enough to allow the cooktop to be removed from the worktop and must be positioned so as to avoid damage or overheating caused by contact with the base.

NOTE: the yellow/green earth wire must be connected to the terminal with the symbol ⏚ and must be longer than the other wires.

- Remove approx. 70 mm of the cable sheath from the power supply cable (**B**).
- Strip approx. 10 mm of sheath from the wires. Then insert the power supply cable into the cable clamp and connect the wires to the terminal block as indicated in the connection diagram placed close to the terminal block itself.
- Secure the power supply cable (**B**) by means of the cable clamp.
- Close the terminal board with the cover (**A**).
- After the electrical connection, fit the hob from the top and hook it to the support springs, according to the illustration.

THANK YOU FOR BUYING A HOTPOINT PRODUCT
In order to receive a more complete assistance, please register your product on **www.register10.eu.**

Before using the appliance carefully read the Safety Instruction.

PLEASE SCAN THE QR CODE ON YOUR APPLIANCE IN ORDER TO REACH MORE INFORMATION

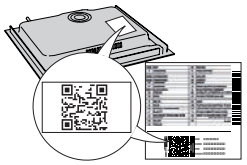

PRODUCT DESCRIPTION

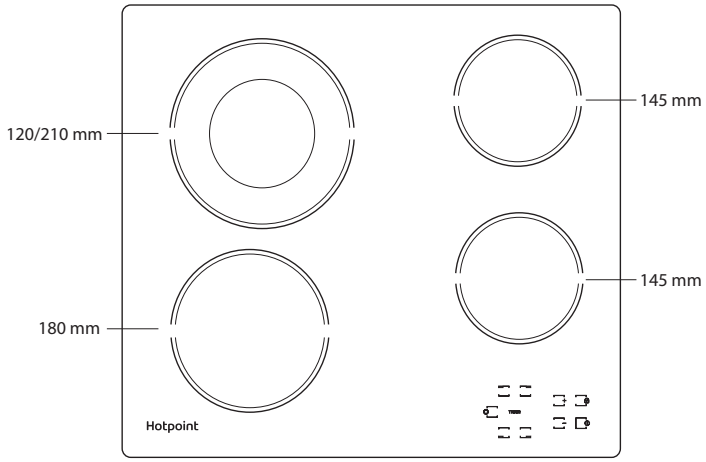

CONTROL PANEL

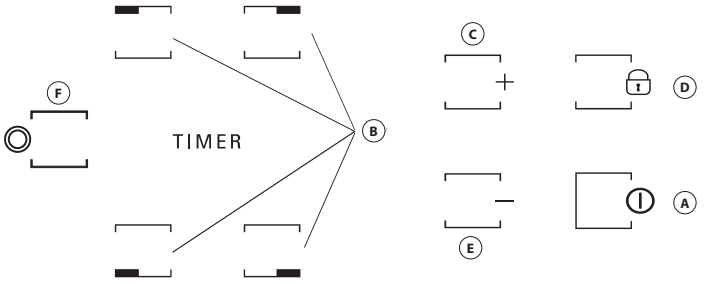

A	On/Off
B	Cooking zone and timer selection
C-E	Heat setting increase and decrease
D	Key lock
F	Multiple zone Activation / Deactivation

FIRST TIME USE

Upon first installation, the control panel performs a functional test for about 1 second, after which it automatically switches to the "Key lock" function.
To deactivate the function, press and hold button "D"; an acoustic signal will sound and the corresponding led will turn off.

NOTE: If a reset occurs, repeat the procedure described above.

DAILY USE

SWITCHING THE HOB ON/OFF

To switch the hob on, keep button "A" pressed for approx. 2 seconds. The 4 cooking zone displays show "0". If within 20 seconds none of the cooking zones is activated, the hob switches off automatically as a safety precaution.

SWITCHING ON AND ADJUSTING COOKING ZONES

Press one of the buttons "B" corresponding to the cooking zone you intend to use. Select the heat setting required with buttons "E" or "C". The other selectable cooking settings go from 1 to 9. Press buttons +/– at the same time to cancel all settings.

IMPORTANT: the control is deactivated 10 seconds after the heat setting has been selected.
To change the heat setting, first press the selection button "B" again, then proceed to change the setting, using buttons "E" or "C".

MULTIPLE ZONE

After selecting the desired zone and setting the level (as described in the previous section) press "F": an indicator above the button turns on,activating the additional zone.
The multiple zone can only be used if:

- The cooking zone is provided with multiple zone;
- The power level selected is greater than 0.

To deactivate the multiple zone, press button "B" of the desired zone, then press "F" again.

TIMER

To set the Timer function, select the desired cooking zone and power setting then press the cooking zone key again and a luminous dot will appear on the display of the timer-controlled cooking zone. The indication "00" blinks on the 2 displays. Press buttons "C" or "E" to set the time from 1 to 99.

IMPORTANT: after 10 seconds the timer displays will show the power setting of the other cooking zones.
To view the remaining cooking time, press the timer-controlled cooking zone key twice.

A FUNCTION

This function allows to automatically decrease the cooking zone power level from the highest value (level 9) to the one selected by the user for a later stage of cooking.
To activate this function first press the "+" button when level 9 is reached.
The display shows "A" and "9" flashes alternately with low brightness.
At this point, choose the desired power level (less than 9) with the "–" button.
"A" and selected level flash alternately with low brightness on the display.
The function is activated once "A" and the selected level flash alternately with high brightness on the display.
Once "A" is no longer visible on the display (the "A" function switches off automatically after several minutes, depending on the set power level), the cooking process continues with lower power and the display shows only the selected power level.
N.B.: this function is not possible with level 9.

KEY LOCK

The Key lock function is switched on by holding down button "D" until a dot lights up above the function button. The control panel is locked except for the switching-off function. The function remains on even after the hob is switched off and on again and can be deactivated by pressing button "D" again until the dot above the function button goes off.
When the hob is off with the key lock activated to switch the hob on, first deactivate the key lock function by pressing button "D" again until the dot above the function button goes off.

The presence of water, liquid spilled from pots or any objects resting on the controls can accidentally activate or deactivate the Key lock function.

RESIDUAL HEAT INDICATOR

When the cooking zone is switched off, the residual heat indicator "H" remains on or flashes alternating with "0" until the temperature of the hob returns within safety levels.

IMPORTANT: The hob's safety features include an automatic switching off function. Prolonged use of the same heat setting triggers automatic switch-off of the cooking zone (for example, after around 1 hour at maximum heat setting, the cooking zone switches off).

IMPORTANT: To avoid a permanent damage the hob:
- do not use pots with bottoms that are not flat;
- do not use metal pots with enamelled bottom;
- do not place hot pots/pans over the control panel.

The hob is also equipped with the "auto shut off" function that switches off the cooking zone if no power level modification is done after a specific time frame depending on the power setting itself. In the table, there is the time duration of each power level.

POWER LEVEL	AUTO SHUT OFF TIME
0	30 seconds
1	10 hours
2	5 hours
3	5 hours
4	4 hours
5	3 hours
6	2 hours
7	2 hours
8	2 hours
9	1 hour

COOKING TABLE

POWER LEVEL		TYPE OF COOKING	LEVEL USE (indicating cooking experience and habits)
Maximum power	9	Boiling	Ideal for rapidly increasing the food temperature to fast boiling in the case of water or rapidly heating cooking liquids.
	9 – 8	Searing	Ideal for browning, starting to cook, frying frozen products, fast boiling.
High power	8 – 7	Browning – maintain boiling – grilling	Ideal for browning, maintaining a high boil, cooking, and grilling (short duration, 5-10 minutes).
	7 – 6	Frying – cooking – grilling	Ideal for maintaining a low boil, cooking and grilling (medium duration, 10-20 minutes), preheating, and frying.
Medium power	6 – 5	Gentle frying	Ideal for frying eggs, omelettes.
	5 – 4	Cooking – simmering – stewing	Ideal for prolonged cooking (rice, sauces, roasts, fish) with liquids (e.g., water, wine, broth, milk), creaming pasta.
	4 – 3	Thickening – creaming pasta	
Low power	2 – 1	Keeping food hot – creaming risottos	Ideal for keeping just-cooked food hot (e.g., sauces, soups, minestrone), creaming risottos and keeping serving dishes warm.
Minimum power	1	Defrosting	Ideal for defrosting small products and gently melting chocolate or butter.
Zero power	0	–	Hob in stand-by or off mode (possible end of cooking residual heat, indicated by an "H").

CLEANING AND MAINTENANCE

⚠ **Disconnect the appliance from the power supply.**

- Do not use steam cleaning equipment.
- Do not use abrasive sponges or scouring pads as they may damage the glass.
- After each use, clean the hob (when it is cool) to remove any deposits and stains from food residue.
- Sugar or foods with a high sugar content can damage the hob and must be immediately removed.
- Salt, sugar and sand could scratch the glass surface.
- Use a soft cloth, absorbent kitchen paper or a specific hob cleaner (follow the Manufacturer's instructions).
- Spills of liquid in the cooking zones can cause the pots to move or vibrate.
- After cleaning the hob, dry thoroughly.

TROUBLESHOOTING

If the hob does not operate correctly, before calling the After-Sales Service, refer to the Troubleshooting Guide to determine the problem.

- Read and follow the instructions given in the section "Daily use".
- Check that the electricity supply has not been shut off.
- Dry the hob thoroughly after cleaning it.
- If a cooking zone has been selected and an "**F**" or an "**ER**" appear on the display followed by a number, contact the After Sales Service and inform them.
- If the error code is "**F03**", "**ER03**" or "**E02**", try to solve it by following these instructions:
  - If the error "**E02**" appears, please make sure you haven't been pressing buttons for more than 5 seconds, no object is on the HMI area and that it's clean and dry - when cleaning, please follow the "Cleaning and Maintenance" paragraph.
  - If the error "**F03**" appears, try turning the cooktop off and on again.
  - If the error "**F04**" appears, contact After Sales Service and let them know which code is displayed.
- If the hob does not work following intensive use, the hob internal temperature is too high. Wait a few minutes until the hob cools down.
- If the heater is not continuously on but switches on and off cyclically even if on the display the power level does not change, this is part of the normal functioning of the hob. The on/off cycle allows the power regulation of the heater and is completely normal. In some cases, thermal protection could switch off the heater for some time to avoid glass damage. Examples of such cases are: cooking a long time at a high power level, using pots smaller than the heating element, and not flat-bottomed pots.
- If the hob is emitting a brief sound without the customer pressing any buttons, please take care of any liquid spills on the HMI. Please dry the HMI and continue using the hob. If the hob has been switched off automatically, it can be caused by a liquid presence on HMI. Please dry the HMI and switch the hob back on.

If after the above checks the fault still occurs, get in touch with the nearest After Sales Service.

AFTER-SALES SERVICE

BEFORE CALLING THE AFTER-SALES SERVICE:

1. See if you can solve the problem by yourself with the help of the **TROUBLESHOOTING** suggestions.
2. Switch the appliance off and back on again to see if the fault persists.

IF AFTER THE ABOVE CHECKS THE FAULT STILL OCCURS, GET IN TOUCH WITH THE NEAREST AFTER-SALES SERVICE.

When contacting our Client After sales service, always specify:

- a brief description of the fault;
- the type and exact model of the appliance;

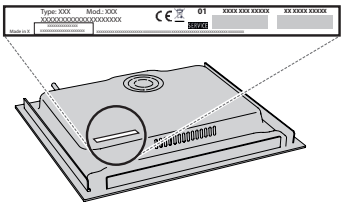

- the serial number (number after the word SN on the rating plate located under the appliance). The serial number is also indicated in the documentation;

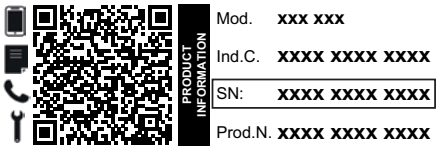

- your full address;
- your telephone number.

If any repairs are required, please contact an authorized after-sales service (to guarantee that original spare parts will be used and repairs carried out correctly).

Policies, standard documentation and additional product information can be found by:

- Using QR code in your appliance;
- Visiting our website **docs.hotpoint.eu;**
- Alternatively, **contact our After-sales Service** (See phone number in the warranty booklet). When contacting our After-sales Service, please state the codes provided on your product's identification plate.

