FTGHG 751 D/H(BK)

12NC: F100499

GTIN (EAN) code: 5054645004997



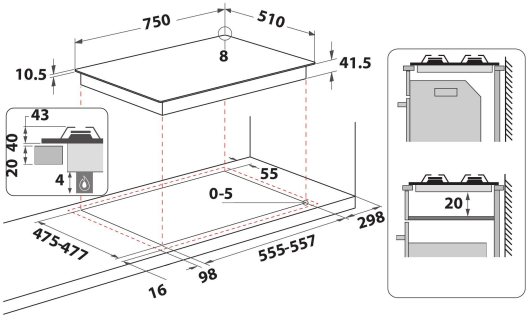

MAIN FEATURES

Product group	Hob
Construction type	Built-in
Type of control	Mechanical
Type of control settings	Knob
Number of gas burners	5
Number of electric cooking zones	0
Number of electric plates	0
Number of radiant plates	0
Number of halogen plates	0
Number of induction plates	0
Number of electric warming zones	0
Location of control panel	Front
Basic surface material	Glass
Main colour of product	Black
Electrical connection rating (W)	0
Gas connection rating (W)	0
Gas type	Only Gas-Methane 20 mBar
Current (A)	-
Voltage (V)	220-240
Frequency (Hz)	50/60
Length of electrical supply cord (cm)	-
Plug type	UK
Gas connection	N/A
Width of the product	750
Height of the product	40
Depth of the product	510
Minimum niche height	0
Minimum niche width	555
Niche depth	475
Net weight (kg)	18.8
Automatic programmes	No

TECHNICAL FEATURES

Power on indicator	No
Number of indicators	0
Type of regulation	FTGH Semi-Fast
Type of lid	Without
Residual heat indicator	Without
Main on/off switch	No
Safety device	Yes
Timer	No

PERFORMANCES

Energy input	Gas