Dell S2421HN(NX)/S2721HN(NX)

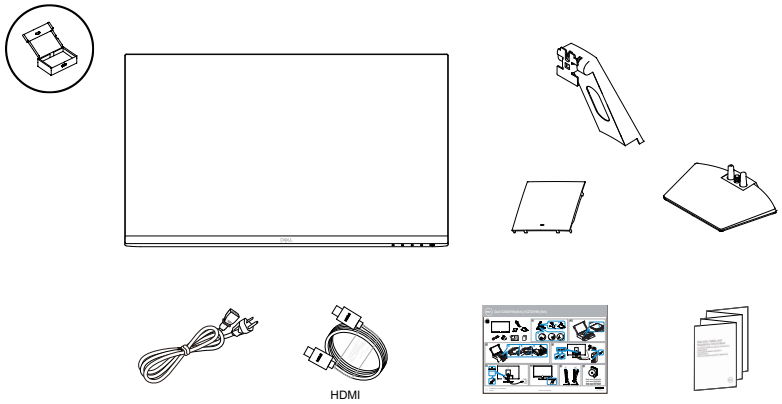

1

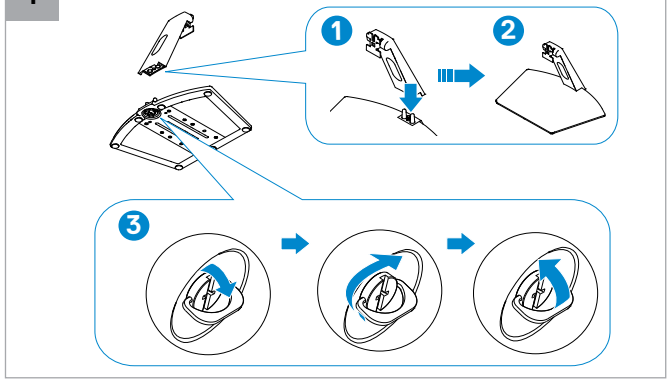

2

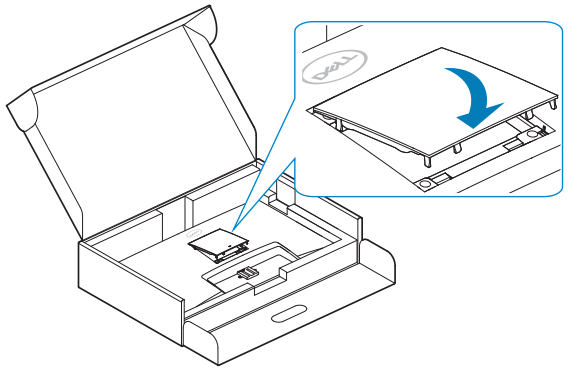

3

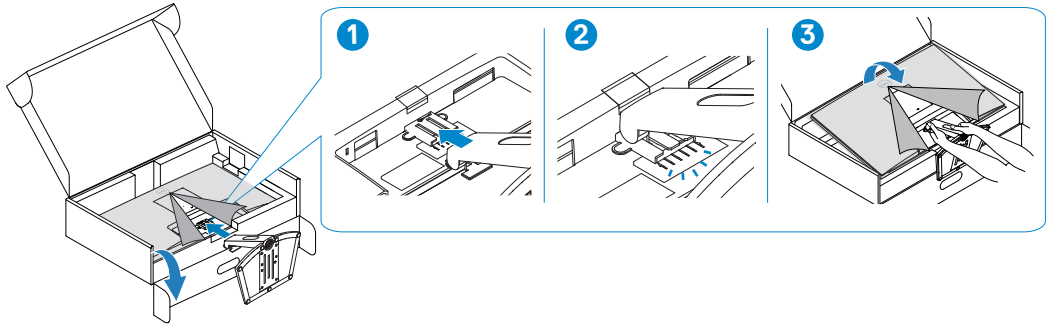

4

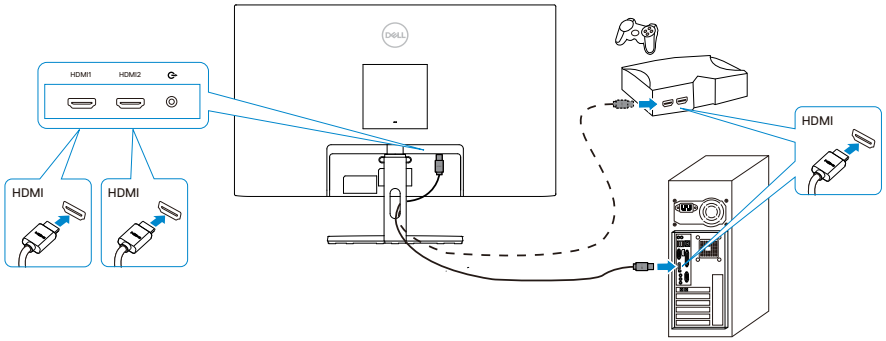

5

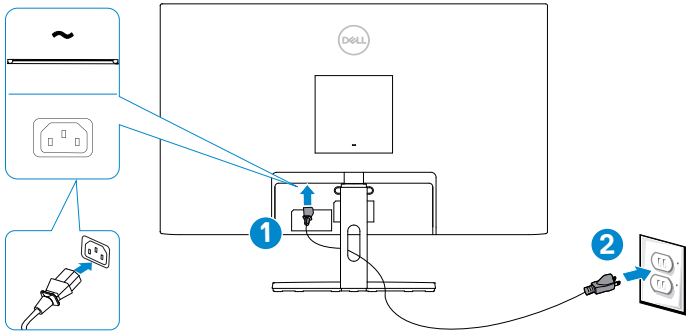

6

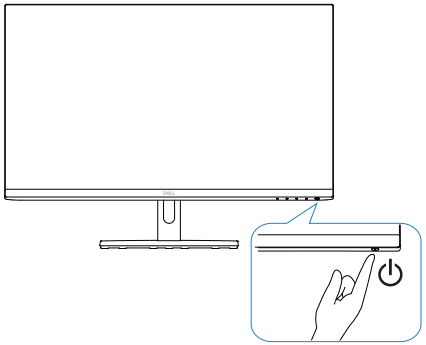

i

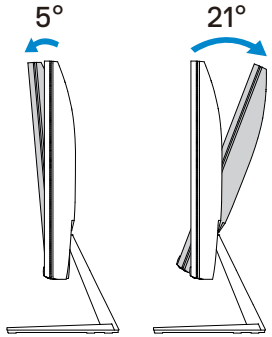

i

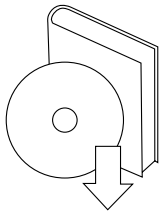

Dell.com/S2421HN
Dell.com/S2421NX
Dell.com/S2721HN
Dell.com/S2721NX

© 2020 Dell Inc. or its subsidiaries.

2020-07

www.dell.com/contactdell

746.A3F01.0001
(DELL P/N: 5V1XG rev.X01)