Operating instructions

built-in fridges and freezers

EN

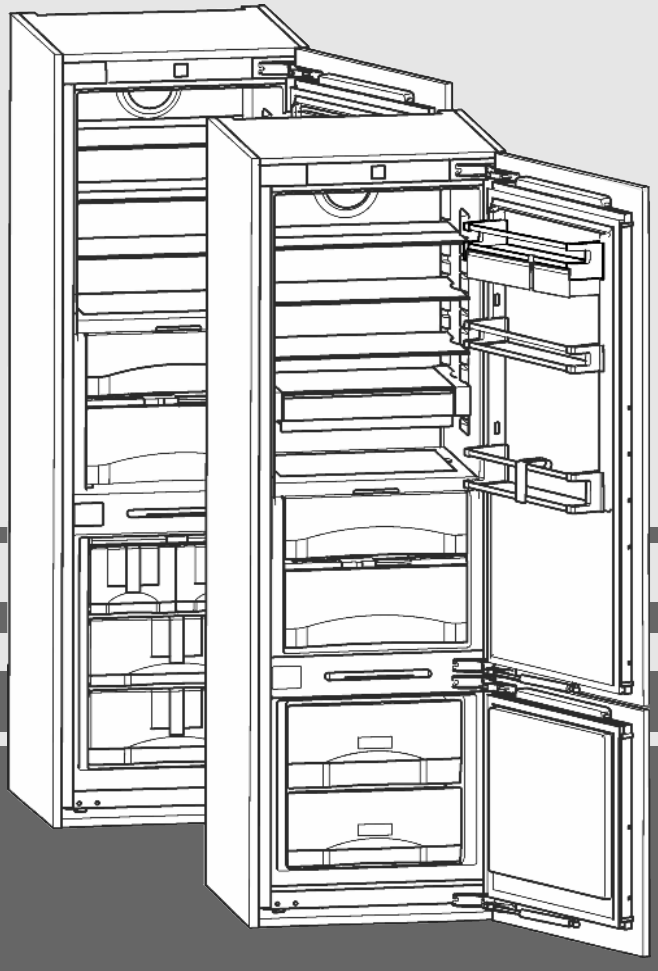

20200617 **7088139 - 01**

ICBPi/ ICBNi

LIEBHERR

Contents

1	**Appliance at a glance**	**2**
1.1	Overview of the appliance and its equipment	2
1.2	Appliance range of use	3
1.3	Conformity	3
1.4	Product data	3
1.5	EPREL database	3
1.6	Saving energy	3
2	**General safety information**	**3**
3	**Controls and displays**	**5**
3.1	Operating and control elements	5
3.2	Temperature display	5
4	**Putting into operation**	**5**
4.1	Switching on the appliance	5
4.2	SmartDeviceBox	5
5	**Control**	**6**
5.1	Child proofing	6
5.2	Door alarm	6
5.3	Temperature alarm	6
5.4	Refrigerator compartment	7
5.5	BioFresh compartment	9
5.6	Freezer compartment	11
6	**Maintenance**	**14**
6.1	Manual defrosting*	14
6.2	Defrosting with NoFrost*	15
6.3	Cleaning the appliance	15
6.4	Cleaning the IceMaker*	15
6.5	Customer service	16
7	**Malfunctions**	**16**
8	**Decommissioning**	**17**
8.1	Shut off the water intake*	17
8.2	Switching off the appliance	17
8.3	Taking the appliance out of service	18
9	**Disposing of the appliance**	**18**

The manufacturer works constantly on the further development of all the types and models. Therefore please understand that we have to reserve the right to make design, equipment and technical modifications.

To get to know all the benefits of your new appliance, please read the information contained in these instructions carefully.

The instructions apply to several models. Differences may occur. Text relating only to specific appliances is marked with an asterisk (*).

Instructions for action are marked with a ▶, the results of action are marked with a ▷.

1 Appliance at a glance

1.1 Overview of the appliance and its equipment

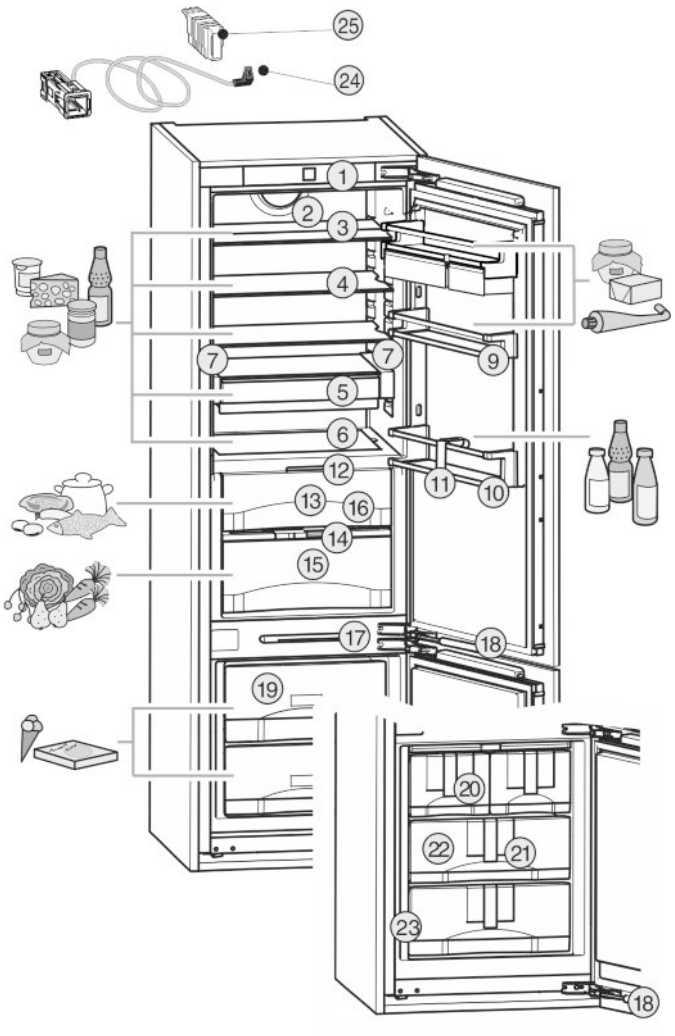

Fig. 1

(1) Operating and control elements
(2) Fan
(3) Storage area, divided
(4) Shelf
(5) VarioSafe*
(6) Adjustable bottle shelf
(7) LED light column, both sides
(8) VarioBox
(9) Can rack*
(10) Bottle shelf
(11) Bottle rack
(12) Biofresh compartment LED lighting
(13) DrySafe
(14) Fruit & Vegetable safe cover
(15) Fruit & Vegetable safe
(16) Outlet
(17) Freezer compartment LED light
(18) Soft closing fittings
(19) Freezer compartment
(20) IceMaker*
(21) InfoSystem*
(22) Freezer pack
(23) Model plate
(24) SDB connector
(25) SmartDeviceBox

Note

▶ Place food inside the appliance as shown in the diagram. This allows the appliance to save energy during operation.

▶ Shelves, drawers and baskets are arranged for optimum energy efficiency on delivery.

1.2 Appliance range of use

Intended use

The appliance is only suitable for cooling food products in a domestic or household-like environment. This includes, for example, use:

- in staff kitchens, bed and breakfast establishments,
- by guests in country houses, hotels, motels and other accommodation,
- for catering and similar services in the wholesale trade.

All other types of use are not permitted.

Foreseeable misuse

The following applications are expressly forbidden:

- Storing and refrigerating medicines, blood plasma, laboratory preparations or similar substances and products based on the Medical Device Directive 2007/47/EC
- Use in areas at risk of explosions

Misusing the appliance may lead to damage to the goods stored or they may spoil.

Climate classifications

Depending on the climate classification the appliance is designed to operate in restricted ambient temperatures. The climate classification applying to your appliance is printed on the rating plate.

Note

▶ Keep to the specified ambient temperatures in order to guarantee that the appliance works properly.

Climate classification	for ambient temperatures of
SN	10 °C to 32 °C
N	16 °C to 32 °C
ST	16 °C to 38 °C
T	16 °C to 43 °C

1.3 Conformity

The refrigerant circuit has been tested for leaks. In installed condition, this appliance complies with the applicable safety stipulations and with directives 2014/35/EU, 2014/30/EU, 2009/125/EG, 2011/65/EU and 2010/30/EU.

The BioFresh compartment meets the requirements of a cold storage compartment as set out in DIN EN 62552:2020.

1.4 Product data

Product data is included with the appliance, as per Directive (EU) 2017/1369. The complete product data sheet is available on the Liebherr website under Downloads.

1.5 EPREL database

Details about energy labelling and ecodesign requirements will be available on the European product database (EPREL) from 1st March 2021. You can access the product database at the following link: https://eprel.ec.europa. eu/ You will be asked to enter the model ID. You can find the model ID on the nameplate.

1.6 Saving energy

EN

- Pay attention to good ventilation. Do not cover ventilation holes or grids.
- Always keep the fan air slits clear.
- Do not install the appliance in direct sunlight, next to an oven, radiator or similar.
- Energy consumption is dependent on the installation conditions, e.g. ambient temperature (see 1.2 Appliance range of use) . If the ambient temperature deviates from the standard temperature of 25°C, the energy consumption may differ.
- Open the appliance for as short a time as possible.
- The lower the temperature is set the higher the energy consumption.
- Arrange the food in an organised way (see 1 Appliance at a glance) .
- Keep all food properly packed and covered. This prevents frost from forming.
- Only take food out for as long as necessary so that it doesn't warm up too much.
- Inserting warm food: allow to cool down to room temperature first.
- Thaw frozen food in the refrigerator.
- If there is a thick layer of frost in the appliance: defrost the appliance.*
- If you intend to be on holiday for a long time use the holiday function (see 5.4.4 Holiday mode) .

2 General safety information

Danger for the user:

- This device can be used by children and people with impaired physical, sensory or mental abilities or with a lack of experience and knowledge provided that they are supervised or have received instruction in the safe use of this device, and about the resulting hazards. Children must not play with this appliance. Cleaning and user maintenance work must not be carried out by children without adult supervision. Children aged between 3 and 8 are allowed to load and unload the appliance. Children below the age of 3 must be kept away from the appliance unless they are under continuous adult supervision.
- When disconnecting the appliance from the supply, always take hold of the plug. Do not pull the cable.
- In the event of a fault pull out the mains plug or deactivate the fuse.
- Do not damage the mains power cable. Do not operate the appliance with a defective mains power cable.

- Repairs, interventions on the appliance and the replacement of mains connection line may only be carried out by After-Sales Service or other suitably trained specialist personnel.
- Only install, connect and dispose of the appliance according to the instructions.
- Only use the appliance when it is installed.
- Please keep these instructions in a safe place and pass them on to any subsequent owners.
- The manufacturer is not liable for damage caused by a faulty fixed water connection.

Fire hazard:

- The coolant used (information on the model plate) is eco-friendly but also flammable. Any leaking coolant may ignite.
  - Do not damage the refrigerant circuit pipes.
  - Do not handle ignition sources inside the appliance.
  - Do not use electrical appliances inside the appliance (e.g. steam cleaners, heaters, ice cream makers, etc.).
  - If the refrigerant leaks: remove any naked flames or ignition sources from the vicinity of the leakage point. Properly air the room. Inform customer services.
- Do not store explosives or sprays using combustible propellants such as butane, propane, pentane, etc. in the appliance. To identify these spray cans, look for the list of contents printed on the can, or a flame symbol. Gases possibly escaping may ignite due to electrical components.
- Please be sure to store alcoholic drinks or other packaging containing alcohol in tightly closed containers. Any alcohol that leaks out may be ignited by electrical components.

Danger of tipping and falling:

- Do not misuse the plinth, drawers, doors etc. as a step or for support. This applies particularly to children.

Danger of food poisoning:

- Do not consume food which has been stored too long.

Danger of frostbite, numbness and pain:

- Avoid prolonged skin contact with cold surfaces or refrigerated/frozen goods or take protective measures, e.g wear use gloves.

Danger of injury and damage:

- Hot steam can lead to injury. Do not use electrical heating or steam cleaning equipment, open flames or defrosting sprays to defrost.
- Do not use sharp implements to remove the ice.

Danger of crushing:

- Do not hold the hinge when opening and closing the door. Fingers may get caught.

Symbols on the appliance:



The symbol can be located on the compressor. It refers to the oil in the compressor and indicates the following danger: Swallowing or inhaling can be fatal. This is only relevant for recycling. There is no danger in normal operation.



This symbol is found on the compressor and indicates the danger of flammable materials. Do not remove the sticker.



A sticker to this effect may be applied to the rear of the appliance. It refers to the foam-padded panels in the door and/or the housing. This is only relevant for recycling. Do not remove the sticker.

Please observe the specific information in the other sections:

	DANGER	identifies a situation involving direct danger which, if not obviated, may result in death or severe bodily injury.
	WARNING	identifies a dangerous situation which, if not obviated, may result in death or severe bodily injury.
	CAUTION	identifies a dangerous situation which, if not obviated, may result in minor or medium bodily injury.
	NOTICE	identifies a dangerous situation which, if not obviated, may result in damage to property.
	Note	It contains useful instructions and tips.

*** Depending on model and options**

3 Controls and displays

3.1 Operating and control elements

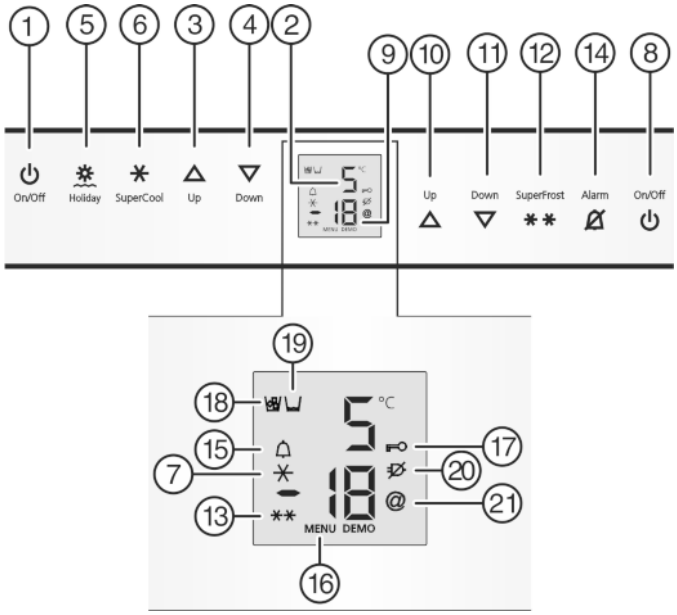

Fig. 2

(1) Fridge On/Off button
(2) Fridge compartment temperature display
(3) 'Up' button, fridge compartment
(4) 'Down' button, fridge compartment
(5) Holiday button
(6) SuperCool button
(7) SuperCool symbol
(8) On/Off button on freezer compartment
(9) Freezer compartment temperature display
(10) 'Up' button, freezer compartment
(11) 'Down' button, freezer compartment
(12) SuperFrost button
(13) SuperFrost symbol
(14) Alarm button
(15) Alarm symbol
(16) Menu symbol
(17) Child lock symbol
(18) IceMaker Symbol*
(19) Water tank symbol*
(20) Power failure symbol
(21) SmartDeviceBox Symbol

3.2 Temperature display

During normal operation, the display shows:
- the highest freezing temperature
- the average cooling temperature

The freezer temperature display flashes if/when:
- You change the temperature setting
- The appliance is not cold enough after switching on
- The temperature rises by several degrees

Stripes flash in the display if/when:
- The freezer temperature exceeds 0 °C.

The following displays indicate a fault. Possible causes and solutions: (see 7 Malfunctions) .
- F0 to F9
- FE✱
- The power failure symbol flashes.

4 Putting into operation

4.1 Switching on the appliance

Note
The manufacturer recommends:
▶ Store frozen produce at -18 °C or colder.

Switch on the appliance approx. 2 hours before loading for the first time.

EN

4.1.1 Switching on the entire appliance at the freezer compartment

▶ Open the door.
▶ Press On/Off button, freezer compartment *Fig. 2 (8)*.
▷ The temperature display of the refrigerator compartment indicates the current temperature inside.
▷ The temperature display of the freezer compartment and the alarm symbol flash until the temperature is sufficiently low. If the temperature is above 0 °C, dashes flash. If it is below, the current temperature flashes.
▷ If “DEMO” is displayed, demo mode is activated. Please contact the after sales service.

4.1.2 Switching on refrigerator and BioFresh compartment

Note
Before going on holiday, or other prolonged periods of non-use
▶ You can switch the fridge section on/off separately from the freezer section.

▶ Open the door.
▶ Press On/Off button, refrigerator compartment *Fig. 2 (1)*.
▷ The fridge and BioFresh section are on: Fridge temperature display *Fig. 2 (2)* is on. When you open the door the interior light comes on.

4.2 SmartDeviceBox

Note
The SDB connector must be installed so that the SmartDevice box is freely accessible at any time.

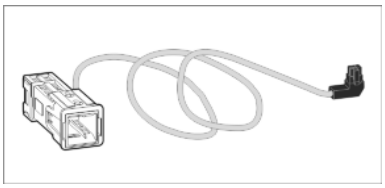

Fig. 3

SDB connector For installation instructions, see the enclosure.
SmartDeviceBox: Start-up instructionswww.smart-device.liebherr.com/install



If the SmartDevice box (SDB) is correctly inserted into the SDB connector, the @ symbol appears in the temperature display. The device is supplied with WLAN activated.
- The SmartDevice box symbol *Fig. 2 (21)* is displayed and flashes -> The SDB is not connected.
- The SmartDevice box symbol *Fig. 2 (21)* is displayed and doesn't flash -> The SDB is connected.
- The SmartDevice box symbol *Fig. 2 (21)* is not displayed -> The SDB is not active, was not inserted correctly or the SDB connector was not installed correctly.



▶ Activate setting mode: Press the SuperFrost button *Fig. 2 (12)* for around 5 seconds.
▷ The display shows **c**.
▷ The Menu symbol *Fig. 2 (16)* lights up.
▶ Choose with 'Up' button, freezer compartment *Fig. 2 (10)* and 'Down' button, freezer compartment *Fig. 2 (11)* d.
▶ Briefly press SuperFrost button *Fig. 2 (12)* to confirm.



If the display d shows:
▶ The functions of the menu can be selected.

Reset WLAN
▶ Choose with 'Up' button, freezer compartment *Fig. 2 (10)* and 'Down' button, freezer compartment *Fig. 2 (11)* d0.
▶ Briefly press SuperFrost button *Fig. 2 (12)* to confirm.
▶ The SmartDevice box settings will be reset if the SmartDevice function is switched off. The @ symbol on the temperature display goes out.



Switching WLAN on/off
▶ Choose with 'Up' button, freezer compartment *Fig. 2 (10)* and 'Down' button, freezer compartment *Fig. 2 (11)* d1.
▶ Briefly press SuperFrost button *Fig. 2 (12)* to confirm.



If the display d1 shows no @ symbol:
▶ WLAN can be switched on.
▶ Briefly press SuperFrost button *Fig. 2 (12)* to confirm.
▷ The @ symbol lights up in the temperature display. WLAN is switched on.

If the display d1 shows the @ symbol:
▶ WLAN can be switched off
▶ Briefly press SuperFrost button *Fig. 2 (12)* to confirm.
▷ The @ symbol goes out in the temperature display. WLAN is switched off.

Connection status SDB
▶ Choose with 'Up' button, freezer compartment *Fig. 2 (10)* and 'Down' button, freezer compartment *Fig. 2 (11)* dd.
▶ Briefly press SuperFrost button *Fig. 2 (12)* to confirm.



The following statuses can be displayed:
- 0 = no SDB detected
- 28 = connected
- 20 = not connected

Signal strength WLAN
▶ Choose with 'Up' button, freezer compartment *Fig. 2 (10)* and 'Down' button, freezer compartment *Fig. 2 (11)* dH.
▶ Briefly press SuperFrost button *Fig. 2 (12)* to confirm.



The following statuses can be displayed:
- 0 = off
- 1 = low
- 2 = medium
- 3 = strong

If the WLAN signal strength is low, the signal can be amplified by a WLAN repeater or by changing the WLAN router.

SDB error status
▶ Choose with 'Up' button, freezer compartment *Fig. 2 (10)* and 'Down' button, freezer compartment *Fig. 2 (11)* dL.
▶ Briefly press SuperFrost button *Fig. 2 (12)* to confirm.



The following statuses can be displayed:
- 0 = no error
- 1 = no IP
  make sure that IP address can be retrieved.
- 2 = no WLAN
  make sure that you are connected to the WLAN router
- 3 = no Internet
  make sure that the WLAN router is connected to the Internet.

▶ Deactivate setting mode: Press the freezer On/Off *Fig. 2 (8)* button.

-or-

▶ Wait 5 min.

▷ The temperature display shows the temperature again.

5 Control

5.1 Child proofing

The child-proofing function enables you to make sure that the appliance is not inadvertently switched off by playing children.

5.1.1 Setting the child lock function

▶ To activate the setting mode: press SuperFrost button *Fig. 2 (12)* for about 5 s.
▷ **c** flashes on the display.
▷ The menu symbol *Fig. 2 (16)* shines.
▶ Briefly press the SuperFrost button *Fig. 2 (12)*.to confirm.

When **cl** is indicated in the display:



▶ Tto activate the child lock, briefly press the SuperFrost button *Fig. 2 (12)*.
▷ The child lock symbol *Fig. 2 (17)* shines. **c** flashes in the display.

When **c0** is indicated in the display:
▶ to deactivate the child lock, briefly press the SuperFrost button *Fig. 2 (12)*.
▷ The child lock symbol *Fig. 2 (17)* goes out. **c** flashes in the display.
▶ To deactivate the set-up mode: press On/Off button, freezer compartment *Fig. 2 (8)*.

-or-

▶ Wait for 5 minutes.

▷ The temperature is indicated again in the temperature display.

5.2 Door alarm

For the fridge, BioFresh and freezer compartments An audible warning sounds if the door is open for longer than 60 seconds.

The audible warning stops automatically when the door is closed.

5.2.1 Muting the door alarm

The audible alarm can be muted when the door is open. The sound switch-off function is active as long as the door is left open.
▶ Press alarm button *Fig. 2 (14)*.
▷ The door alarm is silenced.

5.3 Temperature alarm

The audible alarm sounds if the freezer temperature is not cold enough.

The temperature display and the alarm symbol *Fig. 2 (15)* flash at the same time.

The cause of the temperature being too high may be:

- warm fresh food was placed inside
- too much warm ambient air flowed in when rearranging and removing food
- Prolonged power outage
- the appliance is faulty

The audible alarm is automatically silenced, the alarm symbol *Fig. 2 (15)* goes out and the temperature display stops flashing when the temperature is sufficiently cold again.

If the alarm status persists: (see 7 Malfunctions) .

Note
Food may be spoilt if the temperature is not cold enough.
▶ Check the quality of the food. Do not consume spoiled food.

5.3.1 Muting the temperature alarm

The audible alarm can be muted. When the temperature is sufficiently cold again, the alarm function is active again.
▶ Press alarm button *Fig. 2 (14)*.
▷ The audible alarm is silenced.

5.4 Refrigerator compartment

The natural circulation of air in the refrigerator compartment results in zones differing in temperature. It is coldest directly above the plate separating off the BioFresh zone and at the rear wall. It is warmest at the top front of the compartment and in the door.

5.4.1 Refrigerating food

Note
The energy consumption increases and the cooling performance decreases if the ventilation is inadequate.
▶ Always keep the air slits of the fan free.

▶ Place butter and preserves in the top area and in the door. (see 1 Appliance at a glance)
▶ Use reuseable plastic, metal, aluminium, glass containers and foil wrap to store food.
▶ Always store raw meat and fish in clean, sealed containers on the bottom shelf of the refrigerator, to prevent them coming into contact with or dripping onto other foods.
▶ Foods that easily absorb or give off smell or taste, as well as liquids, should be stored in sealed containers or covered.
▶ Use the front area of the base shelf only to temporarily set down refrigerated foods, for example while rearranging or sorting the contents. Remember not to leave refrigerated foods here as they could shift to the back or tip over when you close the door.
▶ Do not pack foods too closely together, as the air needs to circulate.

5.4.2 Setting the temperature

The temperature depends on the following factors:

- the frequency of opening the door
- how long the door is open for
- the room temperature of the installation location
- the type, temperature and quantity of the food

The temperature can be set from 9 °C to 3 °C, the recommended temperature is 5 °C.
▶ For a higher temperature setting: press Up button, refrigerator compartment *Fig. 2 (3)*.
▶ For a lower temperature setting: press Down button, refrigerator compartment *Fig. 2 (4)*.
▷ When the button is pressed for the first time, the previously set value is indicated, flashing, in the refrigerator compartment temperature display.
▶ To change the temperature in 1 °C steps: briefly press the button.
▶ To change the temperature continuously: hold down the button.
▷ The value is displayed flashing during the setting operation.
▷ The actual temperature is displayed about 5 s after the last press of a button. The temperature slowly adjusts to the new value.

5.4.3 SuperCool



SuperCool is for maximum cooling. This option is for very low temperatures:

- In the fridge compartment

Use SuperCool to quickly cool large amounts of food.

When SuperCool is activated, the fan* may run. The appliance operates with maximum cooling performance, which means that the noise of the refrigeration unit may be temporarily louder.

The SuperCool function uses slightly more energy.

Switching onSuperCool
▶ Briefly press SuperCool button *Fig. 2 (6)*.
▷ The SuperCool *Fig. 2 (7)* symbol lights up in the display.
▷ The cooling temperature drops to the lowest setting.
▷ SuperCool is on.
▷ SuperCool turns off automatically. The appliance continues in energy-saving Normal mode.

To prematurely deactivate SuperCool
▶ Briefly press SuperCool button *Fig. 2 (6)*.
▷ The SuperCool symbol *Fig. 2 (7)* goes out in the display.
▷ SuperCool is deactivated.

5.4.4 Holiday mode



The holiday mode saves energy and prevents odour from occurring when the door of the refrigerator compartment stays closed for a lengthy period.

The freezer compartment remains in operation in the holiday mode.

Activating the holiday mode
▶ Remove all the food from the refrigerator and BioFresh compartment, otherwise they will perish..
▶ Press the holiday button *Fig. 2 (5)* for 3 sec.



▷ The holiday mode is activated. The display indicates **Ho**.

Deactivating the holiday mode
▶ Briefly press the holiday button *Fig. 2 (5)*.
▷ The holiday mode is deactivated.
▷ The current cooling temperature is indicated in the display.

5.4.5 Shelves

Moving or removing shelves

The shelves are prevented from being pulled out accidentally by pull out stops.

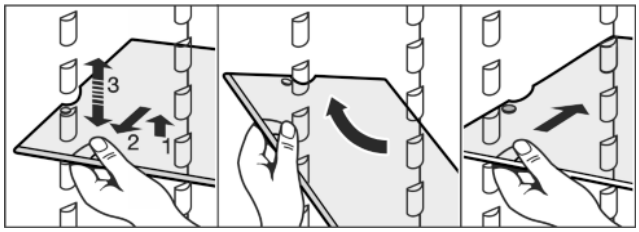

Fig. 4

- ▶ Lift the shelf and pull forward a little.
- ▶ Adjust the height of the shelf. To do this move the slots along the supports.
- ▶ In order to remove the shelf fully, place it at a slant and pull out towards the front.
- ▶ Re-insert shelves at the required height. The stops must face downwards and lie behind the front shelves.

Dismantling shelves

- ▶ The shelves can be dismantled for cleaning.

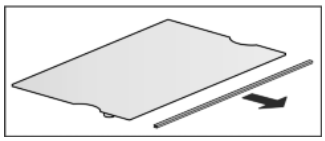

5.4.6 Using the sectioned shelf

- ▶ Slide the sectioned shelf under, as shown in the illustration.

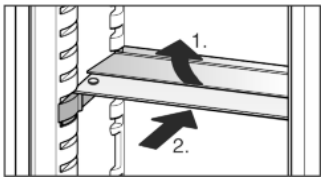

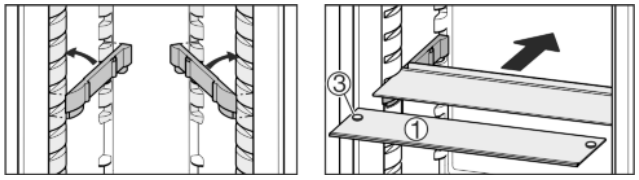

Fig. 5

- ▶ The glass plate (1) with pull-out stops must be at the front so that the stops (3) face downwards.

5.4.7 Using adjustable bottle shelf

At the base of the refrigerator compartment, the integrated bottle shelf or alternatively the glass shelf can be used:

- ▶ Using the bottle shelf: to save space, store the glass shelf under the bottle shelf.
- ▶ Place the bottles with the base pointing backwards facing the rear wall.
  If the bottles project beyond the bottle shelf:
- ▶ set the lower door rack one position higher.

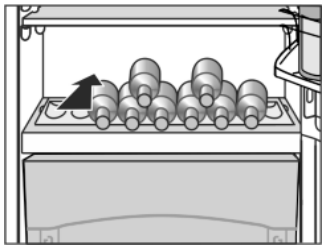

5.4.8 VarioSafe*

The VarioSafe provides space for small items of food and packages, tubes and jars.

Using VarioSafe*

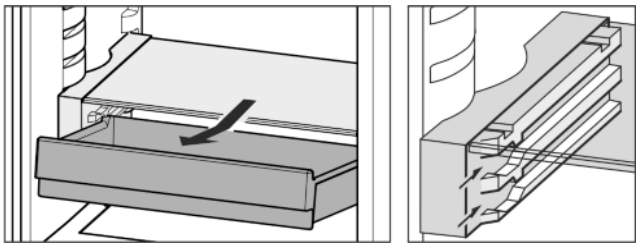

Fig. 6

- ▶ The VarioSafe drawer can be taken out and pushed in at two different heights.
- ▶ The VarioSafe can also be height-adjusted as a whole.
- ▶ To remove them completely, set them at an angle and pull towards you.

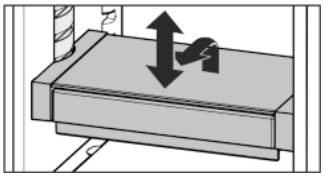

Dismantling VarioSafe*

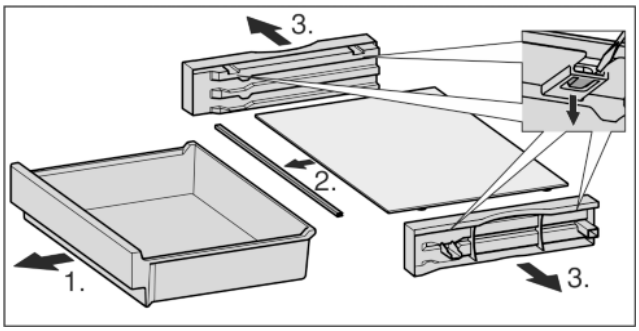

Fig. 7

- ▶ The VarioSafe can be dismantled for cleaning.

5.4.9 Door racks

Moving the storage rack

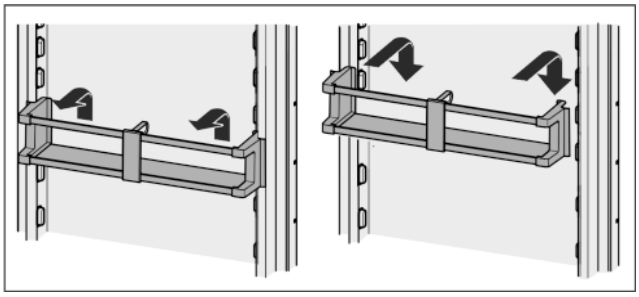

Fig. 8

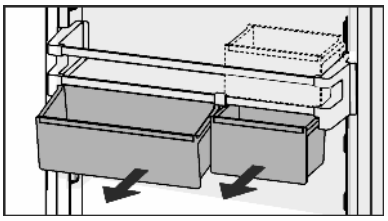

Fig. 9

You can use just one or both boxes. To store oversized bottles, just suspend one box over the bottle rack. Store the other box in the holder.

*** Depending on model and options**

▶ Re-positioning the boxes: Lift them for removal and re-position them as required.

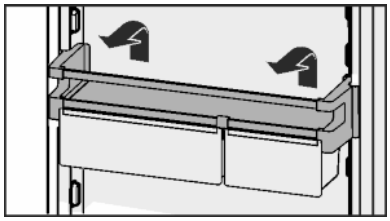

Dismantling door racks

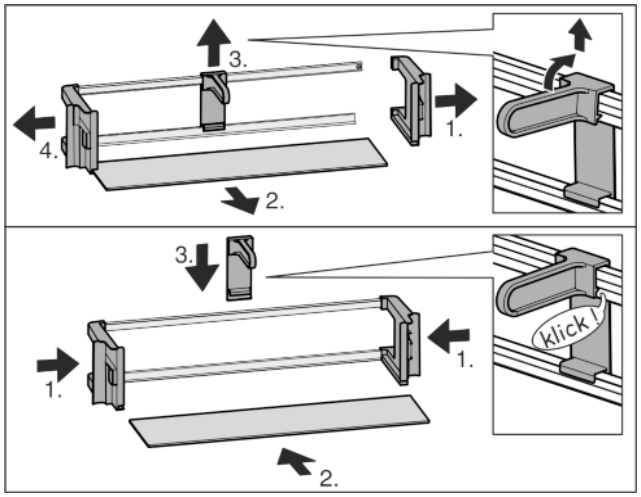

Fig. 10

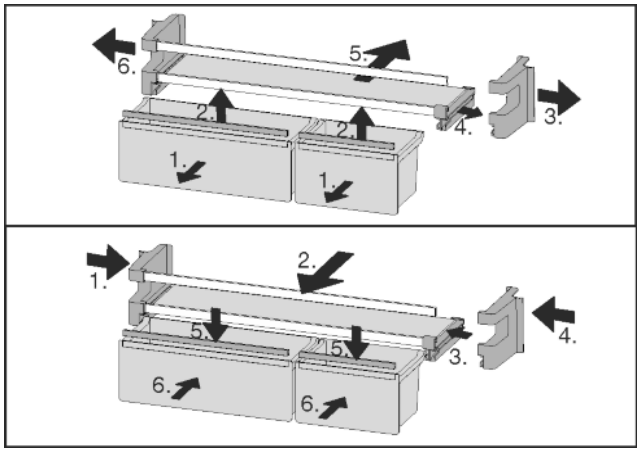

Fig. 11

▶ The door racks can be dismantled for cleaning.

5.4.10 Using the bottle holder

▶ To avoid the bottles tipping over, push the bottle holder along.

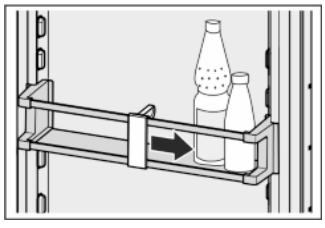

5.4.11 Butter dish

Opening/closing the butter dish

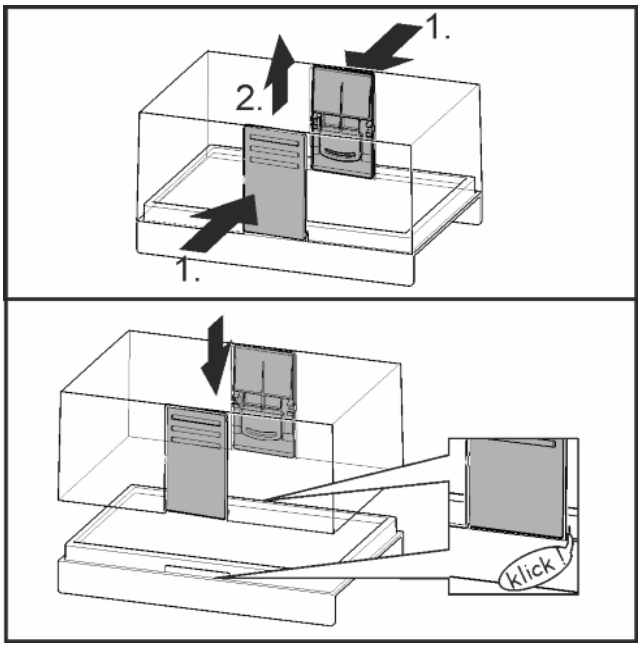

Fig. 12

Dismantling the butter dish

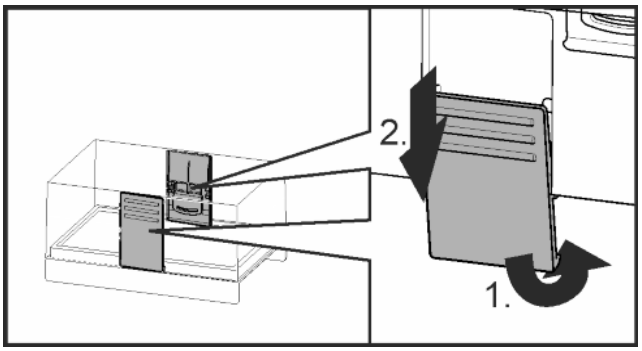

Fig. 13

▶ You can take the butter dish apart for cleaning.

5.4.12 Egg tray

You can take out and rotate the egg tray. You can use the two parts of the egg tray to mark different use-by dates, for example.

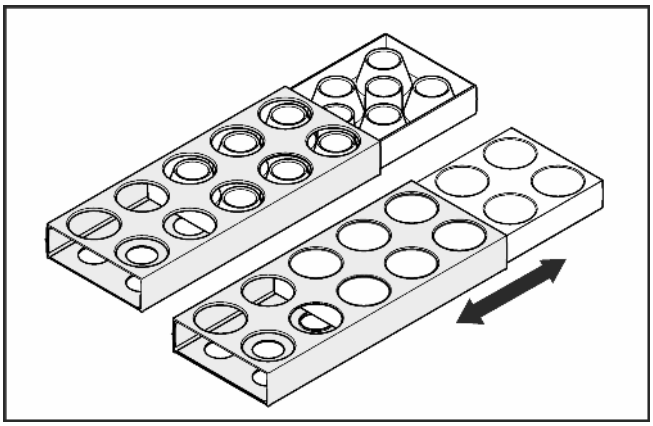

▶ Use the top part to store e.g. chicken eggs.
▶ Use the bottom part to store quails' eggs.

5.5 BioFresh compartment

In the BioFresh section, certain fresh foods can be kept fresh for longer compared to conventional cooling methods.

For food with an indicated best before date, the date specified on the packaging always applies.

EN

If the temperature falls below 0 °C, foodstuffs can freeze.

5.5.1 DrySafe

The DrySafe is suitable for storing dry or wrapped food (e.g. dairy products, meat, fish, sausages). A relatively dry storage climate is established here.

5.5.2 Fruit & Vegetable safe

The humidity in the Fruit & Vegetable safe depends on the moisture content of the items being stored and the number of times the door is opened. You can set the humidity yourself.

On the high moisture setting, the Fruit & Vegetable safe is suitable for storing loose salad, vegetables and fruit with a high moisture content. A well-stocked drawer is stored in absolute freshness.

5.5.3 Setting the moisture level in the Fruit & Vegetable safe

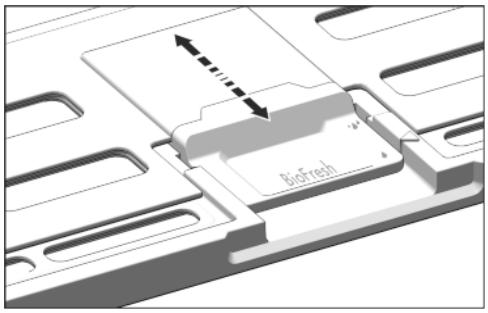

Fig. 14

You can choose any moisture setting for the Fruit & Vegetable safe.

▶ Low humidity: Slide the slide bar backwards.

▷ The openings in the cover are partially or fully open. The moisture levels drop in the Fruit & Vegetable safe.

▶ High humidity: Slide the slide bar forwards.

▷ The openings in the cover are partially or fully closed. The moisture levels rise in the Fruit & Vegetable safe.

5.5.4 Storing food

Note

▶ Do not put the following in the BioFresh section: cold-sensitive vegetables including cucumbers, aubergines, tomatoes, courgettes and any cold-sensitive tropical fruits.

▶ To prevent food spoilage due to transfer of germs: Store unwrapped animal and vegetable products separate from one another in the drawers. This also applies to different sorts of meat.
If food has to be stored together due to lack of space:

▶ wrap the food.

▶ Storing high-moisture content foods: shake off the moisture beforehand.
If there is too much moisture in the compartment:

▶ select the low moisture setting.

-or-

▶ Remove any excess moisture with a cloth.

5.5.5 Storage times

Guidelines for storage periods at low humidity 0 °C			
Butter	up to	90	days
Hard cheese	up to	110	days
Milk	up to	12	days
Cold meats	up to	9	days
Poultry	up to	6	days
Pork	up to	7	days
Beef	up to	7	days
Game	up to	7	days

Note

▶ Please note that protein-rich food deteriorates faster, i.e. shellfish and crustaceans deteriorate faster than fish, fish faster than meat.

Guidelines for storage periods at high humidity 0 °C			
Vegetables, salads			
Artichokes	up to	14	days
Celery	up to	28	days
Cauliflower	up to	21	days
Broccoli	up to	13	days
Chicory	up to	27	days
Leaf lettuce	up to	19	days
Peas	up to	14	days
Kale	up to	14	days
Carrots	up to	80	days
Garlic	up to	160	days
Cabbage	up to	55	days
Round lettuce	up to	13	days
Herbs	up to	13	days
Leeks	up to	29	days
Mushrooms	up to	7	days
Radishes	up to	10	days
Sprouts	up to	20	days
Asparagus	up to	18	days
Spinach	up to	13	days
Savoy cabbage	up to	20	days
Fruit			
Apricots	up to	13	days
Apples	up to	80	days
Pears	up to	55	days
Blackberries	up to	3	days
Dates	up to	180	days
Strawberries	up to	7	days
Figs	up to	7	days
Blueberries	up to	9	days
Raspberries	up to	3	days
Red currants	up to	7	days
Cherries, sweet	up to	14	days
Kiwis	up to	80	days
Peaches	up to	13	days

Guidelines for storage periods at high humidity 0 °C			
Plums	up to	20	days
Cranberries	up to	60	days
Rhubarb	up to	13	days
Gooseberries	up to	13	days
Grapes	up to	29	days

5.5.6 Adjusting the temperature in the BioFresh compartment

Recommended refrigerator setting: 5 °C. The BioFresh temperature is controlled automatically and is between 0 °C and 3 °C.

You can set a slightly higher or lower temperature. The temperature can be adjusted between **bl** (coldest temperature) and **b9** (hottest temperature) The default is **b5**. With levels **bl** to **b4** the temperature may drop below 0 °C so that the food can freeze.

▶ To activate the setting mode: press the SuperFrost button *Fig. 2 (12)* for about 5 s.
▷ The menu symbol *Fig. 2 (16)* shines.
▷ **c** flashes on the display.
▶ Press the Up setting button, freezer compartment *Fig. 2 (10)* the number of times required for **b** to flash in the display.
▶ To confirm: briefly press the SuperFrost button.
▶ To set the temperature higher: press Up button, freezer compartment *Fig. 2 (10)*.
▶ To set the temperature lower: press Down button, freezer compartment *Fig. 2 (11)*.
▶ To confirm: press SuperFrost button.
▷ The temperature slowly adjusts to the new value.



▶ To deactivate the setting mode: press On/Off button, freezer compartment *Fig. 2 (8)*.

-or-

▶ Wait for 5 minutes.

▷ The temperature is indicated again in the temperature display.

5.5.7 Drawers with cushioners

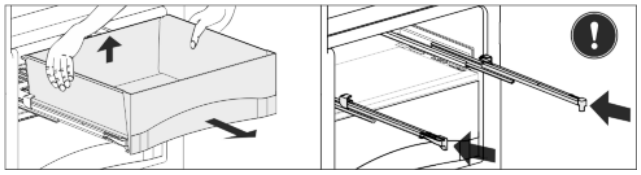

Fig. 15

▶ Pull out the drawer, lift it at the back and draw it forwards for removal.
▶ Push the rails in again!

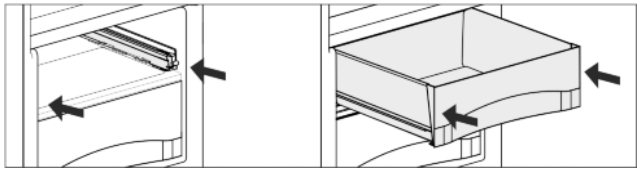

Fig. 16

▶ Push the rails in.
▶ Attach the drawer and push it in until it engages audibly at the back.

5.5.8 Fruit & Vegetable safe cover

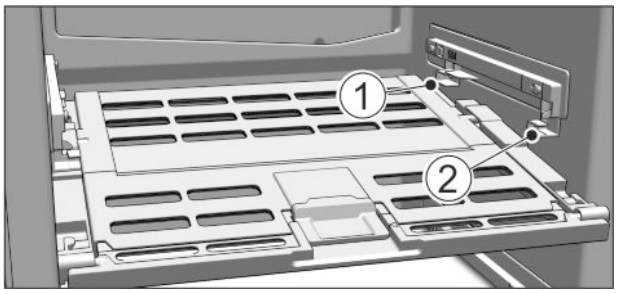

Fig. 17

▶ Removing the Fruit & Vegetable safe cover: After pulling out the drawers, carefully pull the cover towards you and down.
▶ Replacing the Fruit & Vegetable safe cover: Guide the ridges on the cover into the rear brackets *Fig. 17 (1)* and click it into the front bracket *Fig. 17 (2)*.

5.5.9 Using the FlexSystem

The FlexSystem helps you store and organise your food in a clear and flexible way. It lets you clearly divide your food into fruit, vegetables or by use-by dates, for example.

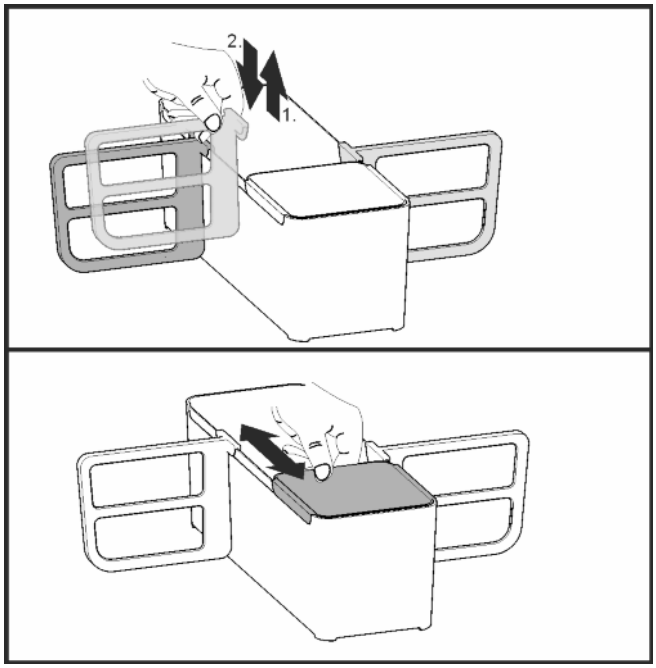

Fig. 18

▶ You can take the FlexSystem apart for cleaning.

5.6 Freezer compartment

You can store frozen food, make ice cubes and freeze fresh food in the freezer compartment.

5.6.1 Freezing food

The rating plate indicates the maximum quantity of fresh food you can freeze within 24 hours (see 1 Appliance at a glance) under “Freezing capacity ... kg/24h”.

Each drawer can hold a max. of 25 kg of frozen food.

The shelves can each be loaded with 35 kg of frozen food.

A vacuum is generated after the door is closed. After closing the door, wait for about 1 minute and then it opens more easily.

EN

CAUTION
Risk of injury due to broken glass!
Bottles and cans containing drinks may burst when being frozen. This applies particularly to sparkling drinks.
▶ Do not freeze bottles and cans containing drinks!

So that the food is rapidly frozen through to the core, do not exceed the following quantities per pack

- Fruit, vegetables up to 1 kg
- Meat up to 2.5 kg

▶ Pack the food in portions in freezer bags, reusable plastic, metal or aluminium containers

5.6.2 Thawing food

- in the refrigerator compartment
- in a microwave oven
- in a conventional or fan oven
- at room temperature

▶ Remove only as much food as is required. Use thawed food as quickly as possible.
▶ Food once thawed should be re-frozen only in exceptional cases.

5.6.3 Setting the temperature in the freezer compartment

The appliance is pre-set for normal operation.

The temperature can be set from -15 °C to -26 °C, the recommended temperature is -18 °C.

▶ To set the temperature higher: press Up button, freezer compartment *Fig. 2 (10)*.
▶ To set the temperature lower: press Down button, freezer compartment *Fig. 2 (11)*.
▷ When the button is pressed the first time, the previous value is indicated in the temperature display of the freezer compartment.
▶ To change the temperature in 1 °C steps: briefly press the button.

-or-

▶ To change the temperature continuously: hold down the button.

▷ The value is displayed flashing during the setting operation.
▷ The actual temperature is displayed approx. 5 seconds after the button is last pressed. The temperature gradually adjusts to the new value.

5.6.4 SuperFrost

With this function you can freeze fresh food quickly through to the core. The appliance operates with maximum refrigeration. The noise of the refrigeration unit may be temporarily louder as a result.

In addition, frozen food already in storage is given a “cold reserve”. The food stays frozen longer as a result when you defrost the appliance.*

You can freeze as many kilograms of fresh food within 24 hrs as is indicated on the type plate under “Freezing capacity ... kg/24hrs”. This maximum freezing quantity can vary depending on model and climate class.

You have to activate SuperFrost in good time, depending on how much fresh food is to be frozen: about 6 hours before placing the food inside in case of small amounts and about 24 hours in advance in case of the maximum amount of food to be frozen.

Wrap produce and spread it out as far as possible. Do not allow produce to be frozen to touch produce that is already frozen to prevent the latter thawing.

You do not have to activate SuperFrost in the following cases:

- when placing frozen food in the freezer
- when freezing up to approx. 2 kg fresh food daily

Freezing with SuperFrost

▶ Briefly press the SuperFrost button *Fig. 2 (12)* once.
▷ The SuperFrost symbol *Fig. 2 (13)* shines.
▷ The freezing temperature drops, the appliance operates with the maximum cooling capacity.
For a smaller quantity of produce to be frozen:
▶ wait approx. 6 h.

Appliances without NoFrost:*
▶ Place wrapped produce in the bottom drawers.*

Appliances with NoFrost:*
▶ Place wrapped produce in the top drawers.*
For the maximum quantity of produce to be frozen:
▶ wait approx. 24 h.

Appliances without NoFrost:*
▶ Remove bottom drawer and place produce directly in the appliance so that it touches the base or sides.*

Appliances with NoFrost:*
▶ Remove top drawers and place produce directly on the top shelves.*
▷ SuperFrost is automatically deactivated. Depending on the quantity placed inside, after 30 h at the earliest, 65 h at the latest.
▷ The SuperFrost symbol *Fig. 2 (13)* extinguishes once freezing is completed.
▶ Place produce in the drawers and push the latter back in again.
▷ The appliance continues to operate in the energy-saving, normal mode.

5.6.5 Drawers

Note
The energy consumption increases and the cooling performance decreases if there is insufficient ventilation.*
For appliances with NoFrost:
▶ Leave the bottom drawer in the appliance!
▶ Always keep the air slits of the fan free at the rear wall!

Note
The energy consumption increases and the cooling performance reduces if the air ventilation is insufficient.*
▶ Ensure that the air slits of the fan on the rear wall are always kept free!

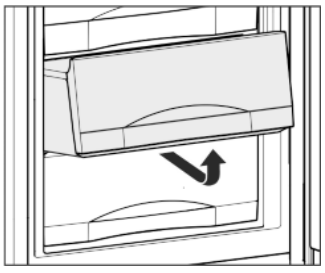

▶ To store frozen food directly on the shelves pull the drawer forward and lift it out.

5.6.6 Shelves

Moving shelves

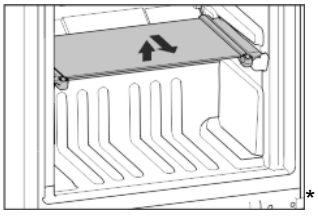

*

- ▶ To remove the shelf: lift up at the front and pull out.
- ▶ To put the shelf back: simply push in as far as it will go.

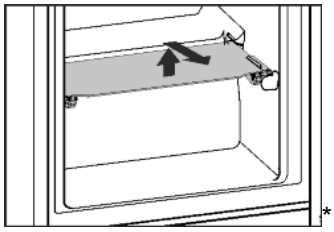

Removing shelves

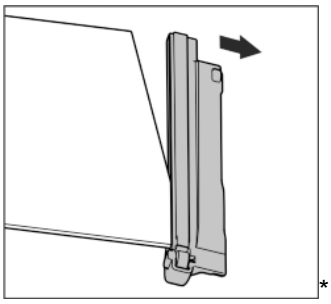

- ▶ The shelves may be removed for cleaning.

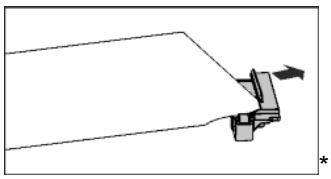

5.6.7 VarioSpace

You can remove the shelves and drawers. This leaves more room for larger food items such as poultry, meat, large game and tall baked goods, which can be frozen whole before further preparation.

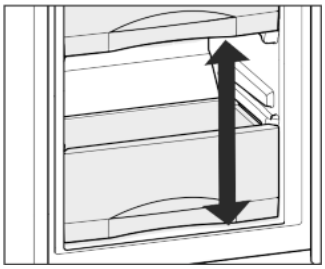

- ▶ Each drawer can hold max. 25 kg of frozen food.
- ▶ The shelves can each be loaded with 35 kg of frozen food.

5.6.8 Information system*

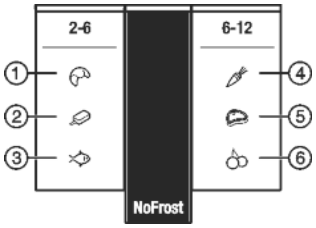

Fig. 19

(1) Bread
(2) Ice cream
(3) Fish
(4) Vegetables
(5) Meat
(6) Fruit

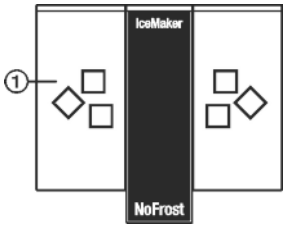

Fig. 20

(1) Ice cubes*

The figures indicate the storage time in months for several types of frozen food in each case. Storage times given are guide times.

5.6.9 Ice cube tray*

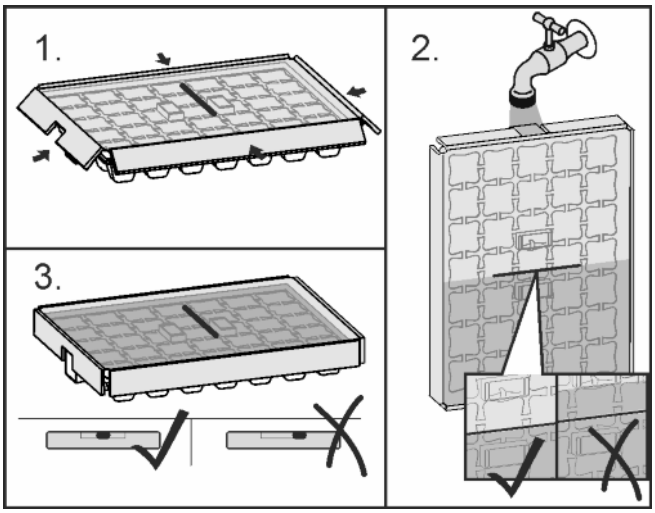

Fig. 21

When the water is frozen:

- ▶ Hold ice cube tray under hot water for a short time.
- ▶ Remove the lid.
- ▶ Gently turn the ends of the ice cube tray in opposite directions and release the cubes.

Dismantling the ice cube tray

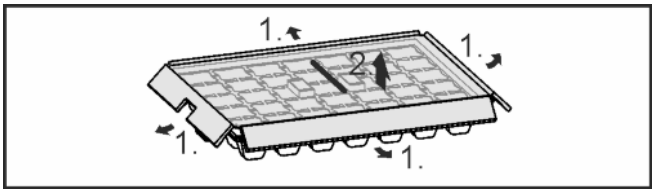

Fig. 22

- ▶ You can take the ice cube tray apart for cleaning.

5.6.10 Freezer pack

Freezer packs prevent the temperature rising too quickly should there be a power cut.

Using freezer packs*

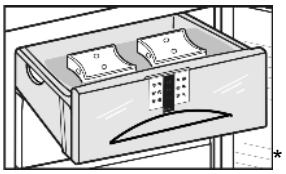

- ▶ Put the fully frozen freezer packs on the frozen food in the top front section of the freezer compartment.

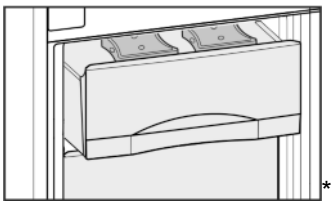

Using the freezer pack*

- ▶ Freeze and store the freezer packs in the top of the freezer section.

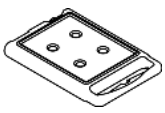

EN

With the top drawer removed:

▶ Inserting the freezer packs: Insert the freezer pack into the back of the top of the freezer section and click into place at the front.

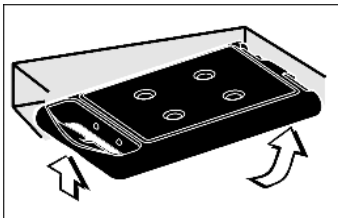

With the top drawer removed:

▶ Removing the freezer packs: Take hold of the side of the freezer pack and remove by pulling downwards.

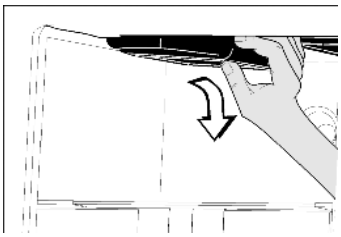

5.6.11 IceMaker*

The IceMaker is in the top drawer of the freezer compartment. The drawer is marked “IceMaker”.

Make certain that the following conditions are met:

- The appliance is level.
- The appliance is connected.
- The freezer compartment is switched on.
- The IceMaker is connected to the water supply.

Switching on the IceMaker*

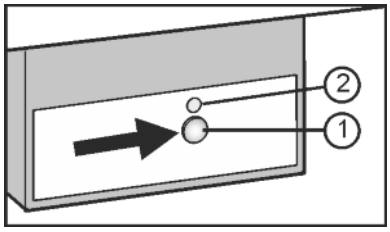

Fig. 23

▶ Pull out the drawer.
▶ Press the On/Off button *Fig. 23 (1)* so that the LED *Fig. 23 (2)* shines.
▶ Push in the drawer.
▷ The IceMaker symbol *Fig. 2 (18)* shines.

Note

▶ The IceMaker produces ice cubes only if the drawer is fully closed.

Producing ice cubes*

The production capacity depends on the freezer temperature. The lower the temperature, the more ice cubes can be produced in a specific period.

The ice cubes drop from the IceMaker into the drawer. When a certain filling level has been reached, no further ice cubes are produced. The IceMaker does not fill the drawer right up to the brim.

Distribute the ice cubes evenly in the drawer to increase the capacity.

If large quantities of ice cubes are needed, the complete IceMaker drawer can be exchanged for the adjacent drawer. When the drawer is closed, the IceMaker automatically re-commences production.

Once the IceMaker has been switched on for the first time, it may take up to 24 hours until the first ice cubes are produced.

Note

When the appliance is used for the first time and if it has been out of use for a long time, particles may collect in the IceMaker and/or water conduit.

▶ Do not use or consume ice cubes that have been made 24 hours after the first ice cubes are made.

Setting the water intake time*

The opening time of the IceMaker valve can be set if, for example, the water pressure in the pipe is too low or too high.

The water intake time can be set in stages from **E1** (short intake time) to **E8** (long intake time). The intake is preset at **E3**.

▶ To activate the setting mode: press the SuperFrost button *Fig. 2 (12)* for about 5 s.
▷ The display indicates **c**.
▷ Themenu symbol *Fig. 2 (16)* shines.
▶ Using the Up setting button, freezer compartment *Fig. 2 (10)* and Down setting button, freezer compartment *Fig. 2 (11)* select **E**.
▶ To confirm: briefly press the SuperFrost button *Fig. 2 (12)*.
▶ To increase the water intake time: press the Up setting button, freezer compartment *Fig. 2 (10)*.
▶ To reduce the water intake time: press the Down setting button, freezer compartment *Fig. 2 (11)*.
▶ To confirm: press the SuperFrost button *Fig. 2 (12)*.
▶ To deactivate the setting mode: press the On/Off button, freezer compartment *Fig. 2 (8)*.

E5

-or-

▶ Wait for 5 minutes.

▷ The temperature is indicated again in the temperature display.

Switching off the IceMaker*

If no ice cubes are needed, the IceMaker can be switched off independently of the freezer compartment.

When the IceMaker is switched off, the IceMaker drawer can also be used for freezing and storing food.

▶ Press the On/Off button for about 1 second until the LED goes out.
▷ The IceMaker symbol *Fig. 2 (18)* goes out.
▶ Clean the IceMaker.
▷ This ensures that no water or ice remains in the IceMaker.

6 Maintenance

6.1 Manual defrosting*

Fridge compartment:

The **refrigerator compartment** is defrosted automatically. The defrost water evaporates as a result of the heat of the compressor. Drops of water on the rear wall are perfectly normal.

▶ Regularly clean the drain opening to allow the water to flow away (see 6.3 Cleaning the appliance) .

Freezer compartment:

A layer of frost or ice can build up in the **freezer compartment** after a long period of operation.

The layer of frost or ice builds up faster if the appliance is opened often or if the food is warm when placed inside. However, a thick layer of ice will increase the appliance‘s energy consumption. You should therefore defrost the appliance regularly.

Thawing process:

WARNING
Danger of injury and damage
- ▶ Do not use any mechanical aids or other means not recommended by the manufacturer in order to accelerate the defrosting process.
- ▶ Do not use electrical heating or steam cleaning equipment, open flames or defrosting sprays to defrost.
- ▶ Do not use sharp implements to remove the ice.
- ▶ Do not damage the pipework in the refrigerant circuit.

- ▶ Switch on SuperFrost one day before defrosting.
- ▷ The frozen goods are provided with a “cold reserve”.
- ▶ Switch off the appliance.
- ▷ The temperature display goes out.
- ▷ If the temperature display does not go out, the child lock function (see 5.1 Child proofing) is active.
- ▶ Pull out the power plug or switch off the fuse.
- ▶ Place cold storage accumulators on top of the frozen food.
- ▶ If possible, put the frozen goods in the freezer drawer, wrapped in newspaper or a blanket, and store in a cool place.
- ▶ Place a pan with hot, not boiling water on a middle shelf.

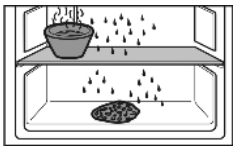

-or-
- ▶ Half-fill the two lower drawers with lukewarm water and put them in the appliance.

- ▷ Defrosting is speeded up.
- ▷ Defrost water is collected in the drawers.
- ▶ Leave the door of the appliance open while defrosting.
- ▶ Remove detached pieces of ice.
- ▶ Pay attention that the defrost water does not run into the kitchen unit.
- ▶ If necessary, pick up defrost water several times, using a sponge or cloth.
- ▶ Clean the appliance (see 6.3 Cleaning the appliance) and rub dry.

6.2 Defrosting with NoFrost*

The NoFrost system automatically defrosts the appliance.

Refrigerator compartment:

The defrost water evaporates due to the compressor heat.
- ▶ Regularly clean the drain opening to allow the water to flow away (see 6.3 Cleaning the appliance) .

Freezer compartment:

The moisture condenses on the evaporator, is periodically defrosted and evaporates.
- ▶ The appliance does not have to be manually defrosted.

6.3 Cleaning the appliance

Clean the appliance regularly.

WARNING
Risk of injury and damage as a result of hot steam!
Hot steam can lead to burns and can damage the surfaces.
- ▶ Do not use any steam cleaners!

NOTICE
Incorrect cleaning damages the appliance!
- ▶ Do not use cleaning agents in concentrated form.
- ▶ Do not use any scouring or abrasive sponges or steel wool.
- ▶ Do not use any sharp or abrasive cleaning agents, nor any that contain sand, chloride or acid.
- ▶ Do not use chemical solvents.
- ▶ Do not damage or remove the type plate on the inside of the appliance. It is important for the customer service.
- ▶ Do not pull off, bend or damage cables or other components.
- ▶ Do not allow any cleaning water to enter the drain channel, ventilation grille or electrical parts.
- ▶ Please use soft cleaning cloths and a universal pH-neutral cleaning agent.
- ▶ Please use cleaning and care products suitable for contact with foodstuffs in the appliance interior.

- ▶ **Empty appliance.**
- ▶ **Pull out the power plug.**



- ▶ Clean **plastic outer and inner surfaces** with lukewarm water and a little washing-up liquid.
- ▶ Clean **drain hole**: Remove deposits with a narrow instrument, e.g. a cotton bud.

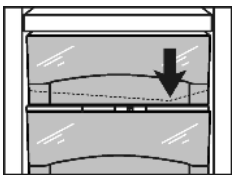

- ▶ Most of the **parts** can be dismantled for cleaning: see the relevant chapter.
- ▶ **Clean drawers** by hand with lukewarm water and a little washing up liquid.
- ▶ Clean the **Fruit & Vegetable safe cover** by hand using lukewarm water and a small amount of detergent.
- ▶ All the **other fittings** can be put in the dishwasher.
- ▶ Only use a damp cloth to clean the **telescopic rails**. The grease in the runners is for lubrication purposes and must not be removed.

After cleaning:
- ▶ Wipe dry the appliance and items of equipment.
- ▶ Connect the appliance and switch it on again.
- ▶ Switch on SuperFrost (see 5.6.4 SuperFrost) .
  When the temperature is sufficiently cold:
- ▶ Put the food back inside.

6.4 Cleaning the IceMaker*

The drawer of the IceMaker has to be emptied and slid in.
- ▶ To activate the setting mode: press the SuperFrost button *Fig. 2 (12)* for about 5 s.
- ▷ The display indicates **c**.
- ▷ The menu symbol *Fig. 2 (16)* shines.
- ▶ Using the Up setting button, freezer compartment *Fig. 2 (10)*/ Down setting button, freezer compartment *Fig. 2 (11)* select **I**.
- ▶ To confirm: press the SuperFrost button *Fig. 2 (12)*.
- ▶ Using the Up setting button, freezer compartment *Fig. 2 (10)*/ Down setting button, freezer compartment *Fig. 2 (11)* select **Ic**.



- ▶ To confirm: press the SuperFrost button *Fig. 2 (12)*.
- ▷ The IceMaker moves into the cleaning position and switches off.
- ▶ To deactivate the setting mode: press the On/Off button, freezer compartment *Fig. 2 (8)*.

-or-
- ▶ Wait for 2 minutes.

▷ The temperature is indicated again in the temperature display.
▶ Remove the drawer.
▶ Clean the ice cube tray and drawer with warm water. If necessary, use mild washing-up liquid. Then rinse.
▶ Slide in the drawer again.
▶ Leave the IceMaker switched off in this position.
-or-

NOTICE
Rinse agent residue in the ice compartment and drawer.
Nausea or irritation of the mucous membrane.
▶ Remove rinse agent residue: Discard the first three batches of ice cubes.

▶ Switch the IceMaker on (see 5.6.11 IceMaker*) .

6.5 Customer service

First check whether you can correct the fault yourself by reference to the list (see 7 Malfunctions) . If this is not the case, please contact the customer service whose address is given in the enclosed customer service list.

WARNING
Risk of injury if repair work is not carried out professionally!
▶ Have any repairs and action - not expressly specified - on the appliance and mains cable carried out by service personnel only. (see 6 Maintenance)

▶ Read the appliance designation *Fig. 24 (1)*, service No. *Fig. 24 (2)* and serial No. *Fig. 24 (3)* off the type plate located inside the appliance on the left-hand side.

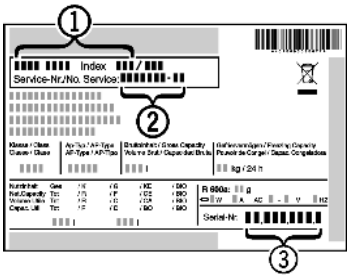

Fig. 24

▶ Notify the customer service, specifying the fault, appliance designation *Fig. 24 (1)*, service No. *Fig. 24 (2)* and serial No. *Fig. 24 (3)*.
▷ This will help us to provide you with a faster and more accurate service.
▶ Keep the appliance closed until the customer service arrives.
▷ The food will stay cool longer.
▶ Pull out the mains plug (not by pulling the connecting cable) or switch off the fuse.

7 Malfunctions

Your appliance is designed and manufactured for a long life span and reliable operation. If a malfunction nonetheless occurs during operation, check whether it is due to a handling error. In this case you will have to be charged for the costs incurred, even during the warranty period. You may be able to rectify the following faults yourself:

Appliance does not work.
→ The appliance is not switched on.
▶ Switch on the appliance.
→ The power plug is not properly inserted in the wall socket.
▶ Check power plug.
→ The fuse of the wall socket is not in order.
▶ Check fuse.

The compressor runs for a long time.
→ The compressor switches to a low speed when little cold is needed. Although the running time is increased as a result, energy is saved.
▶ This is normal in energy-saving models.
→ SuperFrost is activated.
▶ The compressor runs for longer in order to rapidly cool the food. This is normal.
→ SuperCool is activated.
▶ The compressor runs for longer in order to rapidly cool the food. This is normal.

A LED on the bottom rear of the appliance (at the compressor) flashes repeatedly every 5 seconds*.
→ There is a fault.
▶ Please contact the after-sales service (see 6 Maintenance) .

Excessive noise.
→ Due to the various speed steps, speed-regulated* compressors can generate different running noises.
▶ The sound is normal.

A bubbling and gurgling noise.
→ This noise comes from the refrigerant flowing in the refrigeration circuit.
▶ The sound is normal.

A quiet clicking noise.
→ The noise is produced whenever the refrigeration unit (motor) automatically switches on or off.
▶ The sound is normal.

A hum. It is briefly a little louder when the refrigeration unit (the motor) switches on.
→ The refrigeration increases automatically when the SuperFrost, function is activated, fresh food has just been placed in the appliance or the door has been left open for a while.
▶ The sound is normal.
→ The refrigeration increases automatically when the SuperCool function is activated, fresh food has just been placed in the appliance or the door has been left open for a while.
▶ The sound is normal.
→ The ambient temperature is too high.
▶ Solution: (see 1.2 Appliance range of use)

A low hum.
→ The sound is produced by air flow noise of the fan.
▶ The sound is normal.

Vibration noises
→ The appliance is not standing firmly on the floor. As a result objects and adjacent units start to vibrate when the refrigerator is running.
▶ Check the installation and realign the appliance.
▶ Keep bottles and jars apart.

Flow sound at the soft stop mechanism.
→ The noise is produced when the door is opened and closed.
▶ The sound is normal.

The temperature display indicates: F0 to F9
→ There is a fault.
▶ Please contact the after-sales service (see 6 Maintenance) .

The temperature display reads:FE*
→ There is a fault.
▶ Please contact the after-sales service (see 6 Maintenance) .

Power failure flashes in the temperature display . The highest temperature reached during power failure is indicated in the temperature display.

→ The freezer temperature rose too high over the last hours or days due to a power failure or power interruption. When the power interruption is over, the appliance will continue to operate in the last temperature setting.

▶ To cancel the display of the warmest temperature: press alarm button *Fig. 2 (14)*.

▶ Check the quality of the food. Do not consume spoiled food. Do not re-freeze thawed food.

DEMO shines in the temperature display.

→ The demo mode is activated.

▶ Please contact the after-sales service (see 6 Maintenance) .

The outer surfaces of the appliance are warm*.

→ The heat of the refrigeration circuit is used to prevent condensate from forming.

▶ This is normal.

The IceMaker cannot be switched on. *

→ The appliance and therefore the IceMaker are not connected.

▶ Connect the appliance to the mains (see 4 Putting into operation) .

The IceMaker does not make any ice cubes.*

→ The IceMaker is not switched on.

▶ Switch on the IceMaker.

→ The drawer of the IceMaker is not properly closed.

▶ Close the drawer properly.

→ The water connection is not open.

▶ Open the water connection.

→ The water intake to the IceMaker has been interrupted.

▶ Check the water connection **(see Water Connection in the Fitting Instructions)**.

▶ Check the hosing **(see Water Connection in the Fitting Instructions)**.

→ The screen located in the end piece of the water intake hose or the screen located in the connecting piece on the appliance is blocked.

▶ Clean the screens.

The temperature is not cold enough.

→ The door of the appliance is not properly closed.

▶ Close the door of the appliance.

→ Insufficient ventilation.

▶ Keep ventilation grille clear, and clean it.

→ The ambient temperature is too high.

▶ Solution: (see 1.2 Appliance range of use) .

→ The appliance was opened too frequently or for too long.

▶ Wait to see whether the appliance reaches the required temperature by itself. If not, please contact the after sales service (see 6 Maintenance) .

→ Too much fresh food was placed inside without SuperFrost.

▶ Solution: (see 5.6.4 SuperFrost)

→ The temperature is incorrectly set.

▶ Set the temperature to a colder setting and check after 24 hours.

→ The appliance is too close to a source of heat (stove, heater etc).

▶ Change the position of the appliance or the source of heat.

→ The appliance was not inserted properly into the recess.

▶ Check whether the appliance was inserted correctly and the door closes properly.

Dashes ("- -") are indicated in the display.

→ The freezer temperature has risen above zero degrees due to power failure or interruption.

▶ See also "Power failure" and "".

The internal light does not come on.

→ The appliance is not switched on.

▶ Switch the appliance on.

→ The door was open for longer than 15 minutes.

▶ The internal light switches itself off automatically after about 15 minutes if the door is open.

→ The LED illumination is faulty or the cover is damaged:

WARNING

Risk of injury due to electric shock!

There are live electrical parts under the cover.

▶ Only ever have the inside LED light replaced or repaired by customer service or trained personnel.

WARNING

Risk of injury from LED bulb!

The light intensity of the LED light corresponds to hazard group RG 2.

If the cover is defective:

▶ Do not look directly into the light from close range. It cause injury to the eyes.

The door gasket is defective or should be replaced for other reasons.*

→ In some units, the seal around the door can be replaced. You will not need any special tools to do this.

▶ Please contact the after-sales service (see 6 Maintenance) .

The unit has iced up or condensation has formed.*

→ The door seal may have also slipped out of its groove.

▶ Check to ensure that the door seal is seated properly in the groove.

8 Decommissioning

8.1 Shut off the water intake*

NOTICE

Malfunction of the water intake!

If the water intake is shut off during operation but the IceMaker remains in operation, the water intake pipe may ice up.

▶ Switch off the IceMaker if the water supply is interrupted (e.g. holiday).

8.2 Switching off the appliance

Note

▶ If the appliance cannot be switched off, the Child Safety function is still activated (see 5.1 Child proofing) .

8.2.1 Switching the whole appliance off via the freezer compartment

▶ Press the freezer compartment On/Off button *Fig. 2 (8)* for approx. 2 seconds.

▷ A long beep sounds.

▷ The temperature displays are dark.

▷ The appliance is switched off.

8.2.2 Switching off the refrigerator compartment with BioFresh compartment

Note
Before going on holiday, or other prolonged periods of non-use
▶ You can switch the fridge section with BioFresh on/off separately.

▶ Press the refrigerator compartment On/Off button *Fig. 2 (1)* for approx. 2 seconds.
▷ The fridge temperature display *Fig. 2 (2)* is dark.
▷ The fridge and BioFresh section are off.

8.3 Taking the appliance out of service

▶ Empty the appliance.
▶ Put the IceMaker in the cleaning position (see 6 Maintenance) .*
▶ Switch off the appliance (see 8 Decommissioning) .
▶ Remove mains connector.
▶ Clean the appliance (see 6.3 Cleaning the appliance) .



▶ Leave the door open to prevent odour.

9 Disposing of the appliance

The appliance contains some reusable materials and should be disposed of properly - not simply with unsorted household refuse. Appliances which are no longer needed must be disposed of in a professional and appropriate way, in accordance with the current local regulations and laws.



When disposing of the appliance, ensure that the refrigeration circuit is not damaged to prevent uncontrolled escape of the refrigerant it contains (data on type plate) and oil.
▶ Disable the appliance.
▶ Pull out the plug.
▶ Cut through the connecting cable.

Liebherr-Hausgeräte Ochsenhausen GmbH
Memminger Straße 77-79
88416 Ochsenhausen
Deutschland

home.liebherr.com