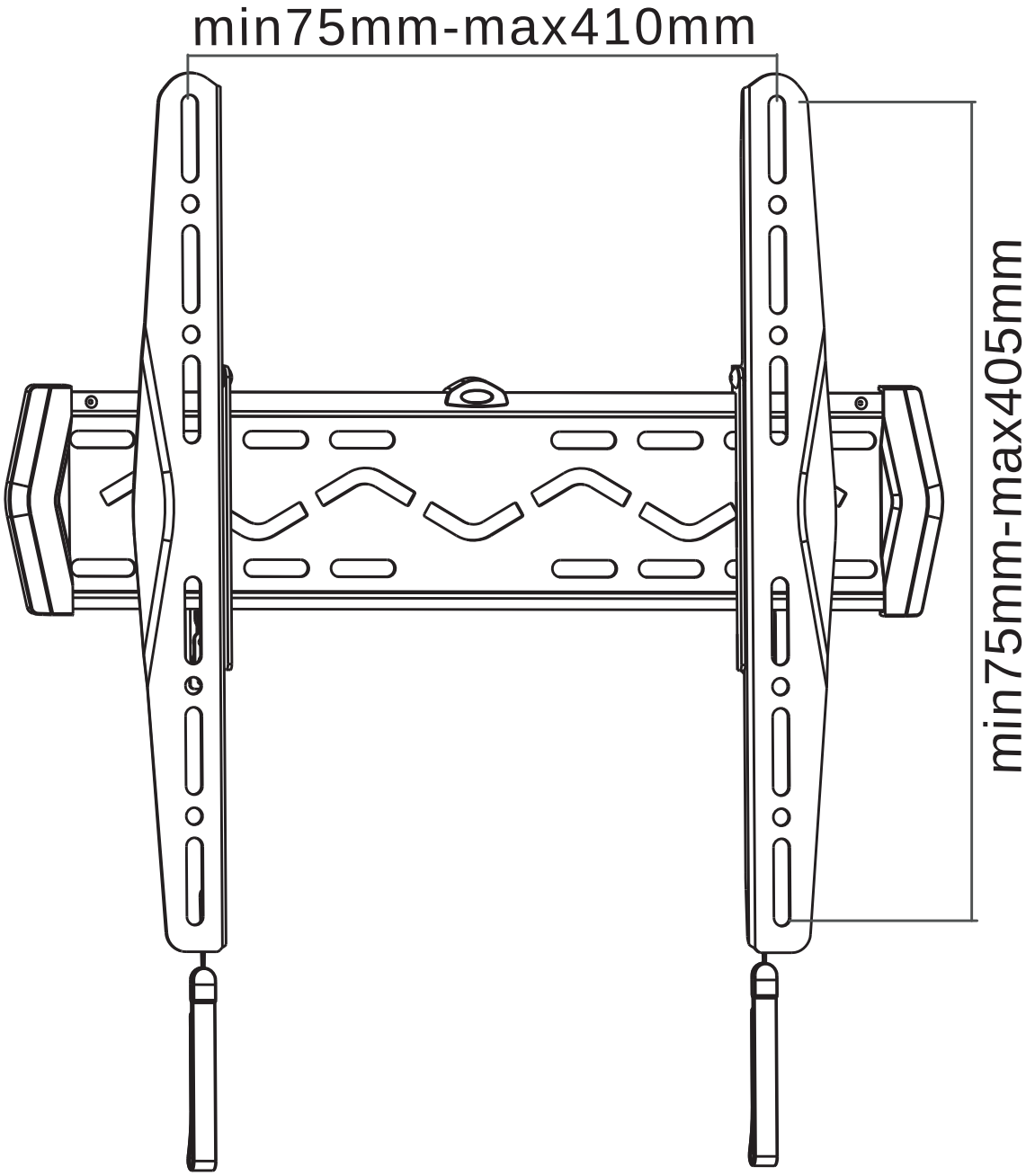
min75mm-max410mm
min75mm-max405mm