User Guide

countertop fridge

EN

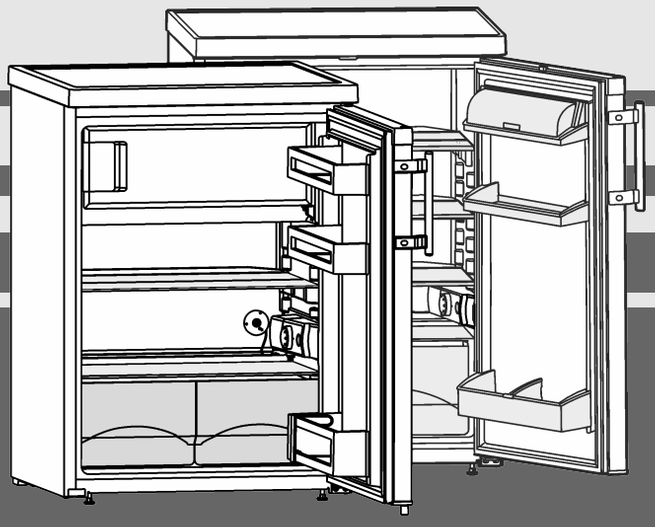

20201023 **7080358 - 00**

T(be)(sl)/TP(esf)/Tb14../15../17../18..

LIEBHERR

EN

Contents

1 Appliance at a glance..... 13
1.1 Description of appliance and equipment..... 13
1.2 Appliance range of use..... 13
1.3 Conformity..... 14
1.4 Product data..... 14
1.5 EPREL database..... 14
1.6 Installation dimensions..... 14
1.7 Saving energy..... 14

2 General safety information..... 14

3 Controls and displays..... 16
3.1 Operating controls..... 16

4 Putting into operation..... 16
4.1 Transporting the appliance..... 16
4.2 Installing the appliance..... 16
4.3 Changing over the door hinges..... 17
4.4 Undercounter installation..... 18
4.5 Insertion into a row of kitchen units..... 18
4.6 Disposing of packaging..... 18
4.7 Connecting the appliance..... 18
4.8 Switching on the appliance..... 19

5 Control..... 19
5.1 Refrigerator compartment..... 19
5.2 Freezer compartment*..... 20

6 Maintenance..... 20
6.1 Defrosting..... 20
6.2 Cleaning the appliance..... 21
6.3 Changing the interior light..... 21
6.4 Customer service..... 22

7 Malfunctions..... 22

8 Decommissioning..... 22
8.1 Switching off the appliance..... 22
8.2 Taking the appliance out of service..... 22

9 Disposing of the appliance..... 23

The manufacturer works constantly on the further development of all the types and models. Therefore please understand that we have to reserve the right to make design, equipment and technical modifications.

To get to know all the benefits of your new appliance, please read the information contained in these instructions carefully.

The instructions apply to several models. Differences may occur. Text relating only to specific appliances is marked with an asterisk (*).

Instructions for action are marked with a ▶, the results of action are marked with a ▷.

1 Appliance at a glance

1.1 Description of appliance and equipment

Note

▶ Place food inside the appliance as shown in the diagram. This allows the appliance to save energy during operation.

▶ Shelves, drawers and baskets are arranged for optimum energy efficiency on delivery.

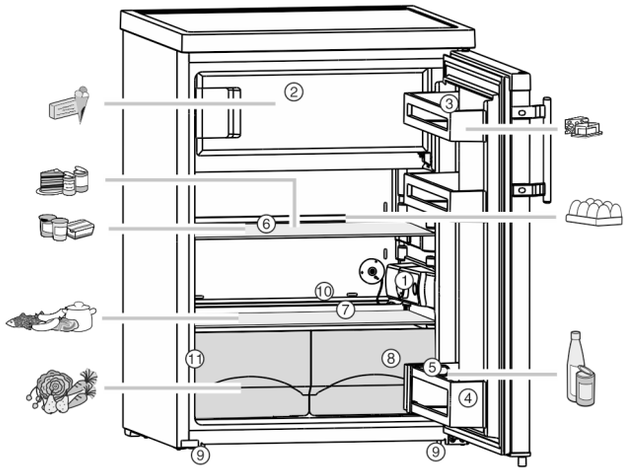

Fig. 1

(1) Thermostat housing, interior lighting
(2) Freezer compartment*
(3) Butter and cheese tray
(4) Bottle rack*
(5) Bottle holder*
(6) Shelf, relocatable
(7) Coldest zone
(8) Vegetable crisper
(9) Adjustable feet at the front and castors* at the rear
(10) Condensate drain
(11) Type plate

1.2 Appliance range of use

Intended use

The appliance is only suitable for cooling food products in a domestic or household-like environment. This includes, for example, use:

The appliance is not suitable for freezing food;*

- in staff kitchens, bed and breakfast establishments,
- by guests in country houses, hotels, motels and other accommodation,
- for catering and similar services in the wholesale trade.

All other types of use are not permitted.

Foreseeable misuse

The following applications are expressly forbidden:

- Storing and refrigerating medicines, blood plasma, laboratory preparations or similar substances and products based on the Medical Device Directive 2007/47/EC
- Use in areas at risk of explosions

Misusing the appliance may lead to damage to the goods stored or they may spoil.

Climate classifications

Depending on the climate classification the appliance is designed to operate in restricted ambient temperatures. The climate classification applying to your appliance is printed on the rating plate.

Note

▶ Keep to the specified ambient temperatures in order to guarantee that the appliance works properly.

Climate classification	for ambient temperatures of
SN	10 °C to 32 °C
N	16 °C to 32 °C
ST	16 °C to 38 °C
T	16 °C to 43 °C

1.3 Conformity

The refrigerant circuit has been tested for leaks. This appliance complies with the applicable safety stipulations and with directives 2014/35/EU, 2014/30/EU, 2009/125/EG, 2011/65/EU and 2010/30/EU.

1.4 Product data

Product data is included with the appliance, as per Directive (EU) 2017/1369. The complete product data sheet is available on the Liebherr website under Downloads.

1.5 EPREL database

Details about energy labelling and ecodesign requirements will be available on the European product database (EPREL) from 1st March 2021. You can access the product database at the following link: https://eprel.ec.europa. eu/ You will be asked to enter the model ID. You can find the model ID on the nameplate.

1.6 Installation dimensions

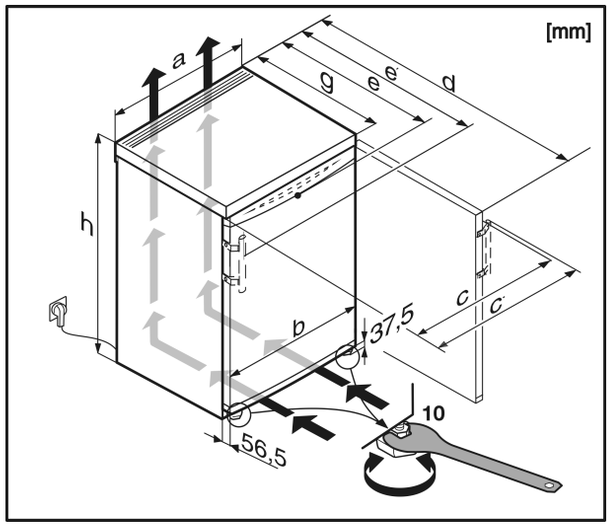

Fig. 2

	a	b	c	c'	d	e	e'	g	h
T1710	554	550	561	590	1127[x]	623[x]	652[x]	610[x]	850
T1810	601	597	612	640	1175[x]	628[x]	654[x]	610[x]	850
TP1710	601	597	612	640	1175[x]	628[x]	654[x]	610[x]	850
TP1720	601	597	612	640	1175[x]	628[x]	654[x]	610[x]	850
TPesf1710	601	597	595	642	1175[x]	608[x]	655[x]	610[x]	850
T1714	601	597	612	640	1175[x]	628[x]	654[x]	610[x]	850
TP1714	601	597	612	640	1175[x]	628[x]	654[x]	610[x]	850
TPesf1714	601	597	595	642	1175[x]	608[x]	655[x]	610[x]	850
TP1724	601	597	612	640	1175[x]	628[x]	654[x]	610[x]	850
TP1410	554	550	561	590	1127[x]	623[x]	652[x]	610[x]	850
TP1414	554	550	561	590	1127[x]	623[x]	652[x]	610[x]	850
TP1404	554	550	563	—	1125[x]	623[x]	—	610[x]	850
TP1400	554	550	563	—	1125[x]	623[x]	—	610[x]	850
TP1434	554	550	561	590	1127[x]	623[x]	652[x]	610[x]	850
T1514	554	550	561	590	1125	623	652	610	850
TP1514	554	550	561	590	1127[x]	623[x]	652[x]	610[x]	850
T1700	554	550	563	—	1127[x]	623[x]	—	610[x]	850
T1504	554	550	563	—	1127[x]	623[x]	—	610[x]	850
T(be) (sl)1414	501	497	505	534	1074[x]	620[x]	649[x]	610[x]	850
TP1424	501	497	505	534	1074[x]	620[x]	649[x]	610[x]	850
T1410	501	497	505	534	1074[x]	620[x]	649[x]	610[x]	850
T(be)1404	501	497	505	—	1072[x]	620[x]	—	610[x]	850
T/Tb1400	501	497	505	—	1072[x]	620[x]	—	610[x]	850

[x] For appliances supplied with wall spacers, the measurement increases by 35 mm (see 4.2 Installing the appliance) .

1.7 Saving energy

- Pay attention to good ventilation. Do not cover ventilation holes or grids.
- Do not install the appliance in direct sunlight, next to an oven, radiator or similar.
- Energy consumption depends on the installation conditions, e.g. the ambient temperature (see 1.2 Appliance range of use) . A warmer ambient temperature can increase the energy consumption.
- Open the appliance for as short a time as possible.
- The lower the temperature is set the higher the energy consumption.
- Arrange the food in an organised way (see 1 Appliance at a glance) .
- Keep all food properly packed and covered. This prevents frost from forming.
- Only take food out for as long as necessary so that it doesn't warm up too much.
- Inserting warm food: allow to cool down to room temperature first.
- Thaw frozen food in the refrigerator.*
- If there is a thick layer of frost in the appliance: defrost the appliance.*

Dust deposits increase energy consumption:

- For refrigerators with heat exchangers dust the metal grid on the back of the appliance once a year.



2 General safety information

Danger for the user:

- This device can be used by children and people with impaired physical, sensory or

mental abilities or with a lack of experience and knowledge provided that they are supervised or have received instruction in the safe use of this device, and about the resulting hazards. Children must not play with this appliance. Cleaning and user maintenance work must not be carried out by children without adult supervision. Children aged between 3 and 8 are allowed to load and unload the appliance. Children below the age of 3 must be kept away from the appliance unless they are under continuous adult supervision.

- When disconnecting the appliance from the supply, always take hold of the plug. Do not pull the cable.
- In the event of a fault pull out the mains plug or deactivate the fuse.
- Do not damage the mains power cable. Do not operate the appliance with a defective mains power cable.
- Repairs, interventions on the appliance and the replacement of mains connection line may only be carried out by After-Sales Service or other suitably trained specialist personnel.
- Only assemble, connect and dispose of the appliance according to the instructions.
- Please keep these instructions in a safe place and pass them on to any subsequent owners.

Fire hazard:

- The coolant used (information on the model plate) is eco-friendly but also flammable. Any leaking coolant may ignite.
  - Do not damage the refrigerant circuit pipes.
  - Do not handle ignition sources inside the appliance.
  - Do not use electrical appliances inside the appliance (e.g. steam cleaners, heaters, ice cream makers, etc.).
  - If the refrigerant leaks: remove any naked flames or ignition sources from the vicinity of the leakage point. Properly air the room. Inform customer services.
- Do not store explosives or sprays using combustible propellants such as butane, propane, pentane, etc. in the appliance. To identify these spray cans, look for the list of contents printed on the can, or a flame symbol. Gases possibly escaping may ignite due to electrical components.
- Keep burning candles, lamps and other items with naked flames away from the appliance so that they do not set the appliance on fire.
- Please be sure to store alcoholic drinks or other packaging containing alcohol in tightly closed containers. Any alcohol that leaks out may be ignited by electrical components.

Danger of tipping and falling:

- Do not misuse the plinth, drawers, doors etc. as a step or for support. This applies particularly to children.

Danger of food poisoning:

- Do not consume food which has been stored too long.

Danger of frostbite, numbness and pain:

- Avoid prolonged skin contact with cold surfaces or refrigerated/frozen goods or take protective measures, e.g wear use gloves.

Danger of injury and damage:

- Hot steam can lead to injury. Do not use electrical heating or steam cleaning equipment, open flames or defrosting sprays to defrost.
- Do not use sharp implements to remove the ice.

Danger of crushing:

- Do not hold the hinge when opening and closing the door. Fingers may get caught.

Symbols on the appliance:



The symbol can be located on the compressor. It refers to the oil in the compressor and indicates the following danger: Swallowing or inhaling can be fatal. This is only relevant for recycling. There is no danger in normal operation.



This symbol is found on the compressor and indicates the danger of flammable materials. Do not remove the sticker.



A sticker to this effect may be applied to the rear of the appliance. It refers to the foam-padded panels in the door and/or the housing. This is only relevant for recycling. Do not remove the sticker.

Please observe the specific information in the other sections:

	DANGER	identifies a situation involving direct danger which, if not obviated, may result in death or severe bodily injury.
	WARNING	identifies a dangerous situation which, if not obviated, may result in death or severe bodily injury.
	CAUTION	identifies a dangerous situation which, if not obviated, may result in minor or medium bodily injury.
	NOTICE	identifies a dangerous situation which, if not obviated, may result in damage to property.

	Note	It contains useful instructions and tips.

3 Controls and displays

3.1 Operating controls

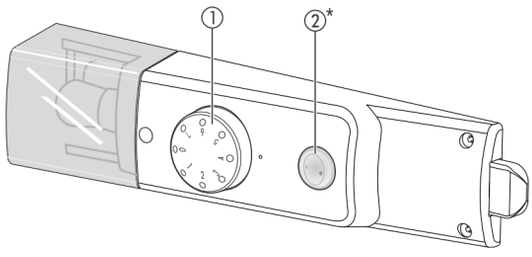

Fig. 3

(1) Temperature controller **(2)** Cool-Plus switch

4 Putting into operation

4.1 Transporting the appliance

- ▶ Transport the appliance only in suitable packaging.
- ▶ Transport the appliance upright.
- ▶ Do not transport the appliance on your own.

4.2 Installing the appliance

WARNING
Fire hazard due to dampness!
If live parts or the mains lead become damp this may cause short circuits.
- ▶ The appliance is designed for use in enclosed areas. Do not operate the appliance outdoors or in areas where it is exposed to splash water or damp conditions.

WARNING
Risk of fire due to short circuit!
If the mains cable/connector of the appliance or of another appliance touch the rear of the appliance, the mains cable/connector may be damaged by the appliance vibrations, leading to a short circuit.
- ▶ Stand the appliance so that it is not touched by connectors or main cables.
- ▶ Do not plug the appliance or any others into sockets located near the rear of the appliance.

WARNING
Fire hazard due to refrigerant!
The coolant used is eco-friendly but also flammable. Any leaking coolant may ignite.
- ▶ Do not damage the piping of the refrigeration circuit.

WARNING
Fire hazard and danger of damage!
- ▶ Do not place appliances emitting heat e.g. microwaves, toasters etc. on the appliance!

WARNING
Blocked ventilation openings pose a risk of fire and damage!
- ▶ Always keep the ventilation openings clear. Always ensure that the appliance is properly ventilated!

NOTICE
Risk of damage due to condensate!
- ▶ Do not install the appliance directly alongside a further refrigerator/freezer.

- ❑ Before you connect the appliance, report any damage immediately to the delivery company.
- ❑ The floor of the installation site must be horizontal and even.
- ❑ Do not install the appliance in direct sunlight, next to an oven, radiator or similar.
- ❑ Install the appliance with the rear panel up against the wall and always use the supplied wall spacers (see below).
- ❑ Only ever move the appliance when it is empty.
- ❑ The surface supporting the appliance must be at the same level as the surrounding floor.
- ❑ Do not install the appliance on your own.
- ❑ The more coolant there is in the appliance, the larger the room in which the appliance is installed must be. If the room is too small, any leak may create a flammable mixture of gas and air. For each 8 g of coolant the installation space must be at least 1 m^3. Information on the coolant is on the model plate inside the appliance.

- ▶ Detach the connecting cable from the rear of the appliance, removing the cable holder at the same time because otherwise there will be vibratory noise!
- ▶ Remove the protective film from the outside of the appliance.*
- ▶ Remove the protective film from the decorative trims.
- ▶ Remove all transit supports.

The spacers supplied with some appliances must be used to achieve the stated energy consumption. These will extend the depth of the appliance by approx. 35 mm. The appliance is fully functional if the spacers are not used, but does have a slightly higher energy consumption.

- ▶ In the case of an appliance with enclosed wall spacers, mount the wall spacers on the back of the appliance at the top left and right.

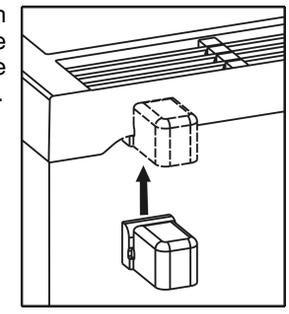

- ▶ Dispose of packaging material (see 4.6 Disposing of packaging) .
- ▶ Align the appliance so that it stands firmly and on a level by applying the accompanying spanner to the adjustable-height feet (A) and using a spirit level.

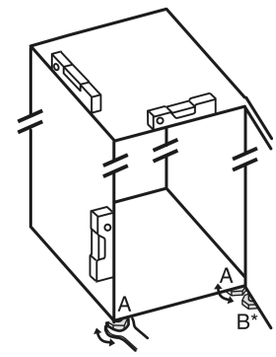

Note
- ▶ Clean the appliance (see 6.2 Cleaning the appliance) .

If the appliance is installed in a very damp environment, condensate may form on the outside of the appliance.
▶ Always see to good ventilation at the installation site.

4.3 Changing over the door hinges

You can change over the door hinges if necessary.

Make sure that the following tools are at hand:

- ❑ Torx® 25
- ❑ Torx® 15
- ❑ Supplied open-ended wrench
- ❑ If necessary, a second person to assist with installation

CAUTION
Risk of injury if the door tips!
▶ Take good hold of the door.
▶ Set down the door carefully.

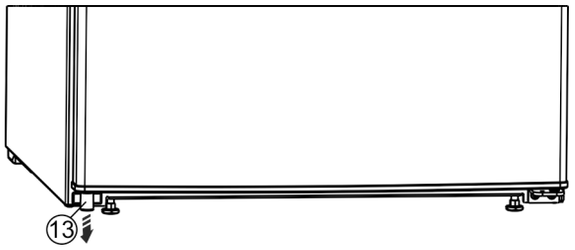

Fig. 4

▶ Remove the spacer *Fig. 4 (13)* from under the left-hand side of the door.

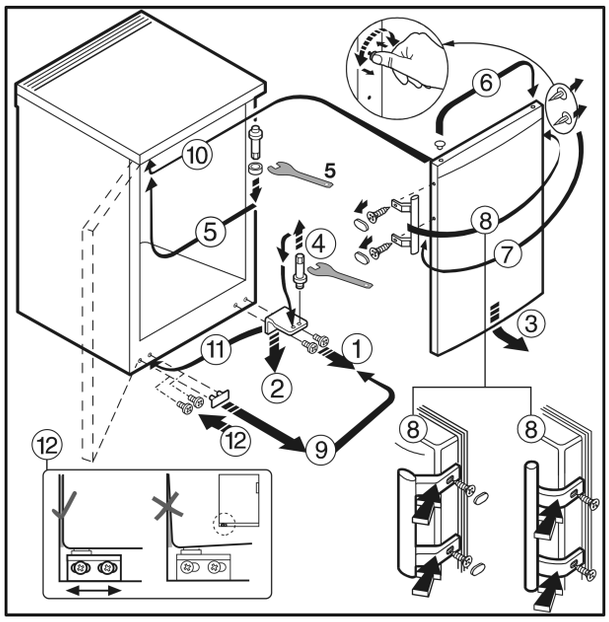

Fig. 5 On appliances with a door handle

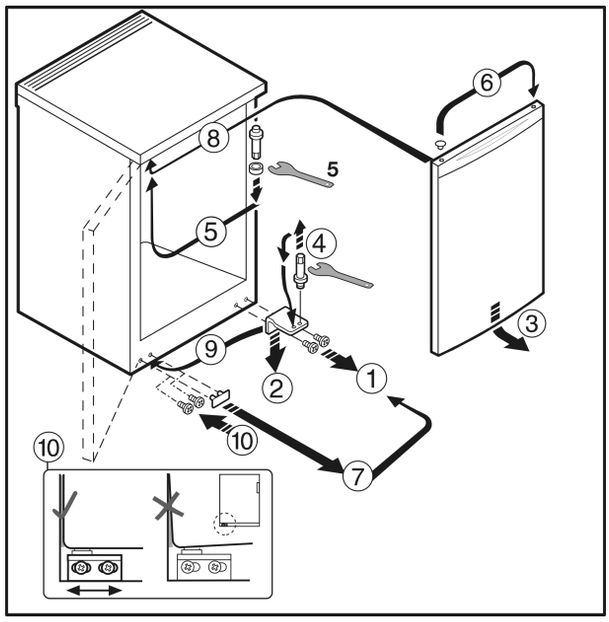

*Fig. 6 On appliances without a door handle**

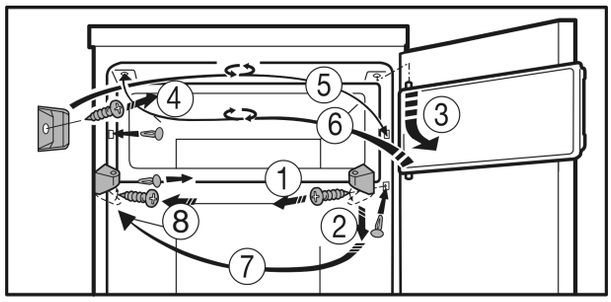

*Fig. 7 On appliances with a freezer compartment**

▶ Follow the sequence of the item numbers in the diagram.

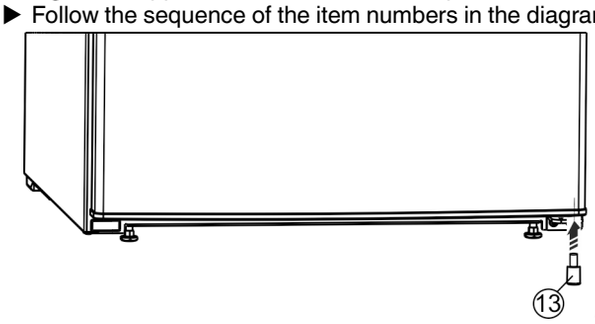

Fig. 8

▶ Insert the spacer *Fig. 8 (13)* back under the right-hand side of the door, as it is important for the stability of the appliance.

WARNING
Risk of injury due to the door dropping out!
If the bearing parts are not screwed into place firmly enough, the door may drop out. This may lead to severe injuries. What is more, the door may not close and therefore the appliance may fail to cool properly.
▶ Screw on the bearing brackets/bearing pins tightly (4 Nm).
▶ Check all of the screws and retighten if necessary.

4.4 Undercounter installation

WARNING
Fire hazard from short-circuiting!
- ▶ When pushing the appliance into the recess, take care not to crush, jam or damage the mains power cable.
- ▶ Do not operate the appliance with a defective mains power cable.

Counter height appliances up to 850 mm in height can be installed below the worktop. In the case of continuous worktops, the cover on the refrigerator can be removed and the appliance slid in under the worktop.

With such installations, the plug *Fig. 9 (1)* must not be located behind the appliance and must be easily accessible.

For the purpose of ventilation and aeration at the rear of the appliance, a min.140 cm² ventilation cavity is required. With an installation depth of 600 mm, the wall connection profile on the worktop must not exceed a max. 10 mmin depth.

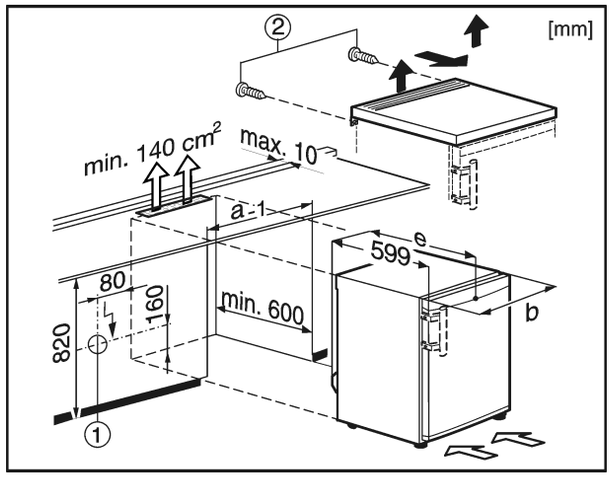

Fig. 9

In order to take off the appliance cover:
- ▶ Remove the screws *Fig. 9 (2)* from the rear side.
- ▶ Raise the cover up at the back, slide forward and lift up and off the appliance.

4.5 Insertion into a row of kitchen units

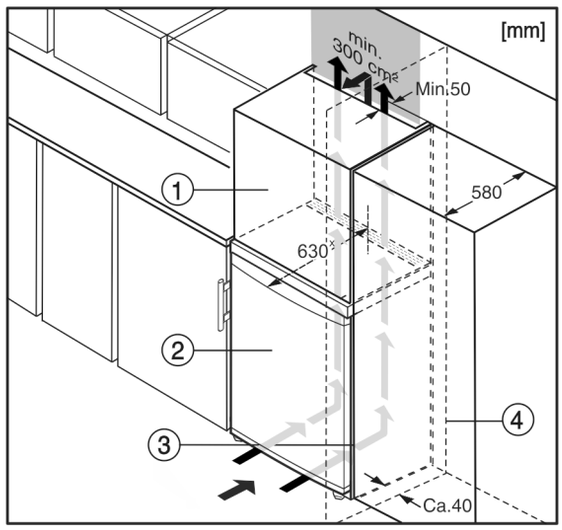

Fig. 10

(1) Stack cabinet*
(2) Appliance*
(3) Kitchen cabinet*
(4) Wall*

[x] For appliances supplied with wall spacers, the measurement increases by 35 mm (see 4.2 Installing the appliance) .

The appliance can be built into kitchen units. A top cupboard *Fig. 10 (2)* can be added above the appliance in order to bring the appliance *Fig. 10 (1)* up to the height of the fitted kitchen units.

When installing with kitchen units (max. depth 580 mm), the appliance can be positioned directly next to the kitchen cabinet *Fig. 10 (3)*. The appliance will project by 34 mm [x] at the sides and 50 mm [x] in the centre of the appliance in relation to the kitchen cabinet front.*

NOTICE
Danger of overheating due to insufficient air ventilation!
The compressor may be damaged if there is insufficient air ventilation.
- ▶ Take care to ensure adequate air ventilation.
- ▶ Observe the ventilation requirements.

Ventilation requirements:
- At the back of the stack cabinet there has to be a ventilation duct of at least 50 mm depth throughout the width of the stack cabinet.
- The cross section of the ventilation gap below the ceiling must be at least 300 cm² .*
- the larger the ventilation space, the more energy-saving the appliance is in operation.

If the appliance is installed with the hinges next to a wall *Fig. 10 (4)*, the distance between appliance and wall has to be at least 40 mm. This corresponds to the projection of the handle when the door is open.*

4.6 Disposing of packaging

WARNING
Danger of suffocation due to packing material and plastic film!
- ▶ Do not allow children to play with packing material.

The packaging is made of recyclable materials:
- corrugated board/cardboard
- expanded polystyrene parts
- polythene bags and sheets
- polypropylene straps
- nailed wooden frame with polyethylene panel*
- ▶ Take the packaging material to an official collecting point.

4.7 Connecting the appliance

NOTICE
Failure to connect properly
Damage to the electronics.
- ▶ Do not use a standalone inverter.
- ▶ Do not use an energy saving plug.

WARNING
Failure to connect properly
Fire hazard.
- ▶ Do not use an extension cable.
- ▶ Do not use distributor blocks.

The type of current (alternating current) and voltage at the installation site have to conform with the data on the type plate (see 1 Appliance at a glance) .

The socket must be properly earthed and fused. The tripping current for the fuse must be between 10 A and 16 A.

The socket must be easily accessible so that the appliance can be quickly disconnected from the supply in an emergency. It must be outside the area of the rear of the appliance.

▶ Check the electrical connection.
▶ Plug in the power plug.



4.8 Switching on the appliance

Put the appliance into operation about 2 hours before first loading food to be frozen.*

▶ Turn the temperature control *Fig. 3 (1)* to the right, from the 0 setting to point 3.
▷ The interior light is on.

5 Control

5.1 Refrigerator compartment

The natural circulation of air in the refrigerator compartment results in zones differing in temperature. It is coldest directly above the vegetable drawers and at the rear wall. It is warmest at the top front of the compartment and in the door.

5.1.1 Refrigerating food

The coldest areas are directly above the vegetable compartments and along the back wall. The warmest area is at the top front and in the door.*

▶ Store perishable foods such as ready-to-eat meals, meat and sausages in the coldest area. Place butter and preserves in the top area and in the door. (see 1 Appliance at a glance)
▶ Use reuseable plastic, metal, aluminium, glass containers and foil wrap to store food.
▶ Always store raw meat and fish in clean, sealed containers on the bottom shelf of the refrigerator, to prevent them coming into contact with or dripping onto other foods.
▶ Foods that easily absorb or give off smell or taste, as well as liquids, should be stored in sealed containers or covered.
▶ Do not pack foods too closely together, as the air needs to circulate.

5.1.2 Setting the temperature

The temperature can be set between 1 (warmest temperature, minimum cooling performance) and 7 (coldest temperature, maximum cooling performance).

The middle control setting is recommended, then a middle temperature of approx.5 °C is established in the refrigerator compartment.

An average temperature of approx. –18 °C is then established in the freezer compartment.*

To ensure ideal temperatures for storing frozen foods, a setting of “4” to “7” on the temperature controller is recommended. Selecting “7” makes it possible to achieve temperatures under 0 °C in the coldest part of the fridge compartment.*

▶ Turn the temperature control *Fig. 3 (1)*.

The temperature depends on the following factors:

- the door opening frequency
- how long the door is open for
- the room temperature at the site where the appliance is installed
- the type, temperature and quantity of frozen food

▶ Adjust the temperature as needed, using the control.

5.1.3 CoolPlus function*

At low room temperatures of 15 °C or lower:
▶ Press the Cool-Plus switch *Fig. 3 (2)*.
▷ The deep temperatures in the freezer compartment are ensured.
Once the room temperature is again higher than 15 °C :
▶ Deactivate the Cool-Plus *Fig. 3 (2)* switch manually.

Note
▶ At normal room temperatures, in excess of 15 °C, the Cool-Plus switch should be turned off, as it is **not** required.

EN

5.1.4 Shelves

Moving or removing shelves

The shelves are prevented from being pulled out accidentally by pull out stops.

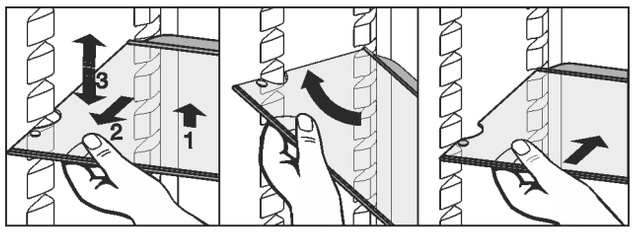

Fig. 11

▶ Lift the shelf and pull forward a little.
▶ Adjust the height of the shelf. To do this move the slots along the supports.
▶ In order to remove the shelf fully, place it at a slant and pull out towards the front.
▶ Insert shelf with the raised edge pointing upwards at the back.
▷ The food does not freeze onto the rear wall.

Dismantling shelves

▶ The shelves can be dismantled for cleaning.

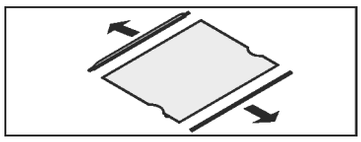

5.1.5 Using the sectioned shelf

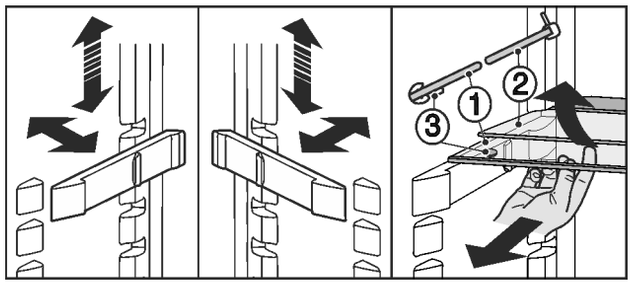

Fig. 12

Adjusting the height:
▶ Pull the glass plates out forwards one by one.
▶ Remove the support from the catch mechanism and click into place at the required height.
Using both shelves:
▶ Lift the top glass plate and pull the bottom glass plate forwards.
▷ The glass plate (1) with the pull out stops must be at the front so that the stops (3) point downward.

5.1.6 Door racks

Removing the storage rack

▶ Remove storage rack according to illustration.

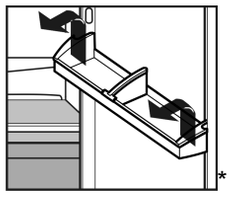

*

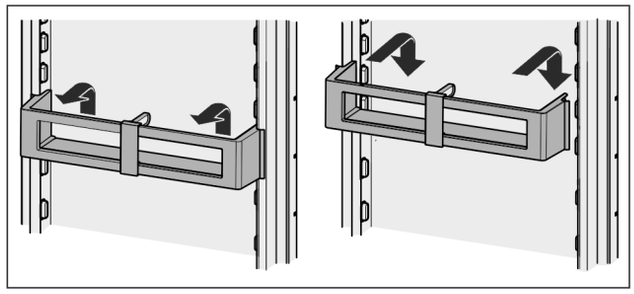

*Fig. 13**

Dismantling door racks*

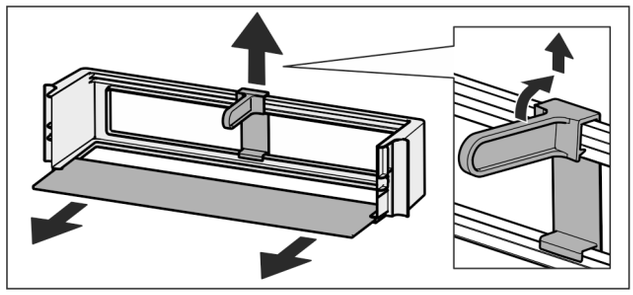

*Fig. 14**

▶ The door racks can be dismantled for cleaning.

5.1.7 Removing the bottle holder

▶ Remove the bottle holder according to the illustration.

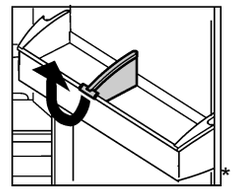

*

5.2 Freezer compartment*

You can store frozen food for several months, make ice cubes and freeze fresh food in the freezer compartment at a temperature of -18 °C and lower.

The air temperature in the compartment, measured by thermometer or other instruments, may fluctuate.

5.2.1 Freezing food

The rating plate indicates the maximum quantity of fresh food you can freeze within 24 hours (see 1 Appliance at a glance) under “Freezing capacity ... kg/24h”.

CAUTION

Risk of injury due to broken glass!

Bottles and cans containing drinks may burst when being frozen. This applies particularly to sparkling drinks.

▶ Do not freeze bottles and cans containing drinks!

▶ 24 hours before freezing food, set the temperature to a mid to cold position

▶ Switch on Cool-Plus: Press theCool-Plus *Fig. 3 (2)* button.*

So that the food is rapidly frozen through to the core, do not exceed the following quantities per pack

- Fruit, vegetables up to 1 kg
- Meat up to 2.5 kg

▶ Pack the food in portions in freezer bags, reusable plastic, metal or aluminium containers

▶ Distribute the food over the shelf and do not let it touch goods that are already frozen, in case this causes them to defrost.*

▶ Reset the temperature 24 hours after storing the food. When the room temperature is higher than 15 °C:*

▶ Switch off Cool-Plus: Press theCool-Plus *Fig. 3 (2)* button.*

5.2.2 Storage times

Guide times for storing various types of food in the freezer compartment:	
Ice cream	2 to 6 months
Sausage, ham	2 to 6 months
Bread, bakery products	2 to 6 months
Game, pork	6 to 10 months
Fish, fatty	2 to 6 months
Fish, lean	6 to 12 months
Cheese	2 to 6 months
Poultry, beef	6 to 12 months
Vegetables, fruit	6 to 12 months

Storage times given are guide times.

5.2.3 Thawing food

- in the refrigerator compartment
- in a microwave oven
- in a conventional or fan oven
- at room temperature

▶ Remove only as much food as is required. Use thawed food as quickly as possible.

▶ Food once thawed should be re-frozen only in exceptional cases.

6 Maintenance

6.1 Defrosting

6.1.1 Defrosting refrigerator compartment

The refrigerator compartment is defrosted automatically. The water evaporates. Drops of water on the rear wall are functionally conditioned and perfectly normal.

▶ Clean the drain hole at regular intervals to allow the defrost water to drain (see 6.2 Cleaning the appliance) .

6.1.2 Defrosting freezer compartment*

A layer of frost and ice forms in the freezer compartment after the appliance has been in use for a lengthy period of time. This is quite normal. The layer of frost and ice forms more quickly if the door is opened frequently or if the food is warm when placed inside. However, a thick layer of ice will increase the appliance‘s energy consumption. You should therefore defrost the appliance regularly.

WARNING

Danger of injury and damage

▶ Do not use any mechanical aids or other means not recommended by the manufacturer in order to accelerate the defrosting process.

▶ Do not use electrical heating or steam cleaning equipment, open flames or defrosting sprays to defrost.

▶ Do not use sharp implements to remove the ice.

▶ Do not damage the pipework in the refrigerant circuit.

▶ Switch off the appliance.

▶ Pull out the plug.

- ▶ Wrap the frozen food in newspaper or blankets and store in a cool place.
- ▶ Leave the compartment and appliance door open during defrosting.
- ▶ Remove detached pieces of ice.
- ▶ If necessary, pick up defrost water several times, using a sponge or cloth.
- ▶ Clean the compartment (see 6.2 Cleaning the appliance) .

6.2 Cleaning the appliance

Clean the appliance regularly.

WARNING
Risk of injury and damage as a result of hot steam!
Hot steam can lead to burns and can damage the surfaces.
- ▶ Do not use any steam cleaners!

NOTICE
Incorrect cleaning damages the appliance!
- ▶ Do not use cleaning agents in concentrated form.
- ▶ Do not use any scouring or abrasive sponges or steel wool.
- ▶ Do not use any sharp or abrasive cleaning agents, nor any that contain sand, chloride or acid.
- ▶ Do not use chemical solvents.
- ▶ Do not damage or remove the type plate on the inside of the appliance. It is important for the customer service.
- ▶ Do not pull off, bend or damage cables or other components.
- ▶ Do not allow any cleaning water to enter the drain channel, ventilation grille or electrical parts.
- ▶ Please use soft cleaning cloths and a universal pH-neutral cleaning agent.
- ▶ Please use cleaning and care products suitable for contact with foodstuffs in the appliance interior.

- ▶ **Empty appliance.**
- ▶ **Pull out the power plug.**



- ▶ Clean the **vent grille** regularly.
- ▷ Dust deposits increase energy consumption.
- ▶ Clean **plastic outer and inner surfaces** with lukewarm water and a little washing-up liquid.
- ▶ Only use a soft clean cloth to wipe **side walls with a paint finish**. In the case of heavy soiling, use lukewarm water with neutral cleaning agent.*
- ▶ Use only a soft clean cloth to wipe **door surfaces** with a paint finish. In the case of heavy soiling, use a little water or neutral cleaning agent. A micro-fibre cloth can be used optionally.*

Do not apply stainless steel cleaning agent to glass or plastic surfaces to prevent them from being scratched. Darker areas at the beginning and quite an intensive colour of the stainless steel surface are normal.*

- ▶ When soiled, clean **stainless steel outer surfaces** with a commercially available stainless steel cleaning agent. Then apply the enclosed stainless steel care product evenly in the direction of polishing.*

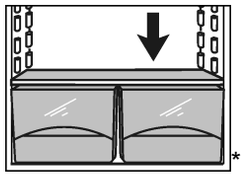

- ▶ Clean **drain hole**: Remove deposits with a narrow instrument, e.g. a cotton bud.

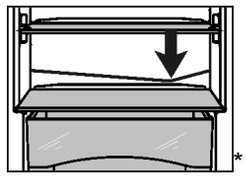

- ▶ Most of the **parts** can be dismantled for cleaning: see the relevant chapter.
- ▶ **Clean drawers** by hand with lukewarm water and a little washing up liquid.
- ▶ Clean **other items of equipment** by hand with lukewarm water and a little washing-up liquid.

After cleaning:
- ▶ Wipe dry the appliance and items of equipment.
- ▶ Connect the appliance and switch it on again.
  When the temperature is sufficiently cold:
- ▶ Put the food back inside.

6.3 Changing the interior light

In the device, an LED lamp is used as standard illumination for the interior space.

When an incandescent bulb is used:
- ❑ Use an incandescent lamp with max. 15 W and E14 socket.
- ❑ Power supply (AC) and voltage at the operating point must comply with the details on the rating plate (see 1 Appliance at a glance) .

When a LED is used:
- ❑ Use only the original LED lamp from the manufacturer. The lamp can be obtained through customer service or a specialist dealer (see 6.4 Customer service) .

WARNING
Risk of injury from LED light!
The light intensity of the LED lighting corresponds to risk group RG 2.
If the cover is removed:
- ▶ Do not look directly into the light at close quarters through optical lenses. Doing so may damage your eyes.

WARNING
Fire hazard from the LED light!
If different LED lights are used, there is a danger of overheating or fire.
- ▶ Use the manufacturer's original LED light.

If the lamp is defective, exchange it as follows:
- ▶ Switch off the appliance.
- ▶ Pull out the power plug or switch off the fuse.
- ▶ As shown in the diagram, press open the lamp cover on the inside at the front, and pull it off to the side.
- ▶ Replace the lamp.
- ▶ Put on the lamp cover again and snap it into place.

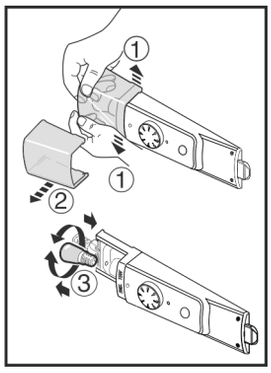

6.4 Customer service

First check whether you can correct the fault yourself by reference to the list (see 7 Malfunctions) . If this is not the case, please contact the customer service whose address is given in the enclosed customer service list.

WARNING
Risk of injury if repair work is not carried out professionally!
▶ Have any repairs and action - not expressly specified - on the appliance and mains cable carried out by service personnel only. (see 6 Maintenance)

▶ Read the appliance designation *Fig. 15 (1)*, service No. *Fig. 15 (2)* and serial No. *Fig. 15 (3)* off the type plate located inside the appliance on the left-hand side.

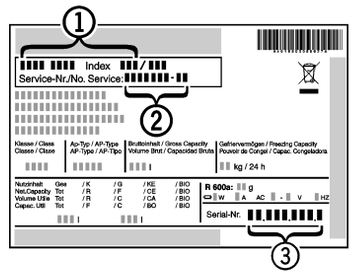

Fig. 15

▶ Notify the customer service, specifying the fault, appliance designation *Fig. 15 (1)*, service No. *Fig. 15 (2)* and serial No. *Fig. 15 (3)*.
▷ This will help us to provide you with a faster and more accurate service.
▶ Keep the appliance closed until the customer service arrives.
▷ The food will stay cool longer.
▶ Pull out the mains plug (not by pulling the connecting cable) or switch off the fuse.

7 Malfunctions

Your appliance is designed and manufactured for a long life span and reliable operation. If a malfunction nonetheless occurs during operation, check whether it is due to a handling error. In this case you will have to be charged for the costs incurred, even during the warranty period. You may be able to rectify the following faults yourself:

Appliance does not work.
→ The appliance is not switched on.
▶ Switch on the appliance.
→ The power plug is not properly inserted in the wall socket.
▶ Check power plug.
→ The fuse of the wall socket is not in order.
▶ Check fuse.

The compressor runs for a long time.
→ The compressor switches to a low speed when little cold is needed. Although the running time is increased as a result, energy is saved.
▶ This is normal in energy-saving models.

A LED on the bottom rear of the appliance (at the compressor) flashes regularly every 15 seconds*.
→ The inverter is equipped with a diagnostic LED.
▶ The flashing is normal.

Excessive noise.
→ Due to the various speed steps, speed-regulated* compressors can generate different running noises.
▶ The sound is normal.

A bubbling and gurgling noise.
→ This noise comes from the refrigerant flowing in the refrigeration circuit.
▶ The sound is normal.

A quiet clicking noise.
→ The noise is produced whenever the refrigeration unit (motor) automatically switches on or off.
▶ The sound is normal.

A hum. It is briefly a little louder when the refrigeration unit (the motor) switches on.
→ The refrigeration increases automatically when fresh food has just been placed in the appliance or the door has been left open for a while.
▶ The sound is normal.
→ The ambient temperature is too high.
▶ Solution: (see 1.2 Appliance range of use)

Vibration noises
→ The appliance is not standing firmly on the floor. As a result objects and adjacent units start to vibrate when the refrigerator is running.
▶ Align the appliance using the adjustable feet.
▶ Keep bottles and jars apart.

The outer surfaces of the appliance are warm*.
→ The heat of the refrigeration circuit is used to prevent condensate from forming.
▶ This is normal.

The temperature is not cold enough.
→ The door of the appliance is not properly closed.
▶ Close the door of the appliance.
→ Insufficient ventilation.
▶ Keep ventilation grille clear, and clean it.
→ The ambient temperature is too high.
▶ Solution: (see 1.2 Appliance range of use) .
→ The appliance was opened too frequently or for too long.
▶ Wait to see whether the appliance reaches the required temperature by itself. If not, please contact the after sales service (see 6 Maintenance) .
→ The appliance is too close to a source of heat (stove, heater etc).
▶ Change the position of the appliance or the source of heat.

The internal light does not come on.
→ The appliance is not switched on.
▶ Switch the appliance on.
→ The lamp (if the model comes with an LED lamp) is faulty.

WARNING
Risk of injury from LED light!
The light intensity of the LED lighting corresponds to risk group RG 2.
If the cover is removed:
▶ Do not look directly into the light at close quarters through optical lenses. Doing so may damage your eyes.

▶ Change the lamp (see 6 Maintenance) .

With an ambient temperature below 15 °C the device is slightly warmed in places on the inner surface of the fridge compartment's right side wall.
→ This is a necessary part of the function.
▶ This is normal.

8 Decommissioning

8.1 Switching off the appliance

▶ Turn temperature control *Fig. 3 (1)* to 0.

8.2 Taking the appliance out of service

▶ Empty the appliance.

- ▶ Switch off the appliance (see 8 Decommissioning) .
- ▶ Remove mains connector.
- ▶ Clean the appliance (see 6.2 Cleaning the appliance) .



- ▶ Leave the door open to prevent odour.

9 Disposing of the appliance



The appliance contains some reusable materials and should be disposed of properly - not simply with unsorted household refuse. Appliances which are no longer needed must be disposed of in a professional and appropriate way, in accordance with the current local regulations and laws.

When disposing of the appliance, ensure that the refrigeration circuit is not damaged to prevent uncontrolled escape of the refrigerant it contains (data on type plate) and oil.

- ▶ Disable the appliance.
- ▶ Pull out the plug.
- ▶ Cut through the connecting cable.

Liebherr-Hausgeräte Marica EOOD
4202 Radinovo
Bezirk Plovdiv
Bulgarien

home.liebherr.com