Operating instructions

Multi-temperature wine cabinet

Read the operating instructions before switching on for the first time

Page 12

EN

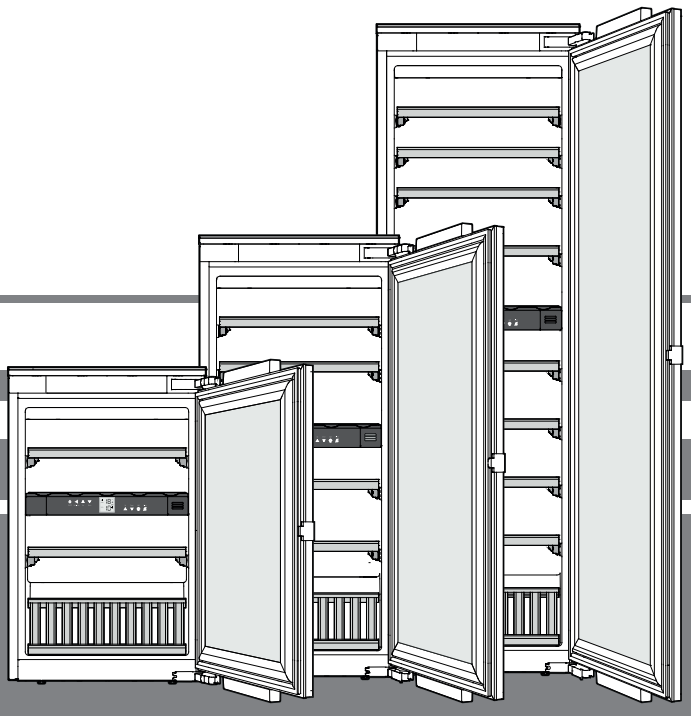

7085 663-01

EWTdf 1653 / 2353 / 3553

LIEBHERR

Vinidor

Content

Priority of warnings 12
Safety instructions and warnings 12
Symbols on the appliance 13
Product data 13
Range of appliance use 14
Description of the appliance 14
Disposal notes 14
Climate rating 15
Setting up 15
Electrical connection 15
Operating and control elements 15
Switching the appliance on and off 15
Setting the temperature 16
Fan 16
Door open alarm 16
Temperature alarm 16
Set-up mode 16
Interior light 17
Labels 17
Air exchange with activated charcoal filter 18
Removing and inserting the wooden shelves 18
Storage diagram 19
Storage diagram
Presentation shelf 20
Cleaning 20
Malfunctions 20
Shutting your appliance down 21

Priority of warnings

⚠ **DANGER**	identifies a situation involving direct danger which, if not obviated, may result in death or severe bodily injury.
⚠ **WARNING**	identifies a dangerous situation which, if not obviated, may result in death or severe bodily injury.
⚠ **CAUTION**	identifies a dangerous situation which, if not obviated, may result in minor or medium bodily injury.
NOTICE	identifies a dangerous situation which, if not obviated, may result in damage to property.
Note	identifies useful information and tips.

Safety instructions and warnings

- **WARNING:** do not seal ventilation openings on the appliance housing or enclosure.
- **WARNING:** only use the mechanical devices or other aids recommended by the manufacturer to help speed up the defrosting process.
- **WARNING:** do not damage the refrigerant circuit.
- **WARNING:** do not use any electrical devices in the refrigerator compartment which do not comply with the design recommended by the manufacturer.
- **WARNING:** the mains cable must not be damaged while installing the appliance.
- **WARNING:** multi-sockets or distributor strips and other electronic devices (such as halogen transformers) must not be positioned and operated at the rear of appliances.
- **WARNING:** danger of injury through electric shock. There are live parts under the cover. Only have the interior LED light replaced or repaired by customer service staff or trained personnel.
- **WARNING:** risk of injury from the LED lamp. The light intensity of the LED light complies with laser class RG 2. If the cover is defective, do not look directly at the light through optical lenses from close distance. This may damage your eyes.
- **WARNING:** this appliance must be secured as described in the operating instructions (Installation instructions) to rule out any potential risks due to its instability.
- This appliance may be used by children aged 8 and over and by people with reduced physical, sensory or mental abilities or a lack of experience and expertise if they are supervised or have been instructed on the safe use of the appliance and have understood the risks associated with it. Children must not be allowed to play with the appliance. Cleaning and user maintenance must not be carried out by children without supervision. Children aged 3 or over and 8 or younger may load and unload the refrigerator/freezer.

- Do not store any explosive substances, such as aerosol containers with flammable propellant gas, inside the appliance.
- To prevent injury and damage to property, the appliance should only be installed by two people.
- After unpacking it, check the appliance for signs of damage. Contact the supplier if it is damaged. Do not connect the appliance to the mains power supply.
- Avoid prolonged skin contact with cold surfaces (e.g. chilled/frozen products). If necessary, take safety action (e.g. gloves).
- All repairs and work on the appliance may only be carried out by customer service personnel or other trained personnel. The same applies to changing the mains power cable.
- Only carry out repair and other work on the appliance when the mains plug has visibly been disconnected.
- Only install, connect and dispose of the appliance as described in these operating instructions.
- In the event of a fault, pull out the plug or switch off the fuse.
- When disconnecting the appliance from the mains, pull on the plug. Do not pull on the cable.
- If you have a lockable appliance, do not keep the key near the appliance or within reach of children.
- The appliance is designed for use in enclosed areas. Do not operate the appliance outdoors or in areas where it is exposed to splash water or damp conditions.
- Do not use the interior LED light to light the room. The interior LED light is only designed to illuminate the interior of the appliance.
- Do not allow naked flames or ignition sources to enter the appliance.
- Alcoholic drinks or other vessels containing alcohol should be sealed tightly for storage.

Symbols on the appliance

	The symbol can be located on the compressor. It refers to the oil in the compressor and indicates the following danger: swallowing or inhaling can be fatal. This is only relevant for recycling. There is no danger in normal operation.
	Warning about inflammable substances.
	A sticker to this effect may be applied to the rear of the appliance. It refers to the foampadded panels in the door and/or the housing. This is only relevant for recycling. Do not remove the sticker.

Product data

Product data is included with the appliance, as per Directive (EU) 2017/1369. The complete product data sheet is available on the Liebherr website under Downloads.

Range of appliance use

The appliance is suitable solely for storing wine in a domestic environment or similar. This includes, for example, use

- in staff kitchenettes, bed and breakfast establishments,
- by guests in cottages, hotels, motels and other forms of accommodation,
- in catering and similar services in the wholesale trade.

Use the appliance solely as is customary within a domestic environment. All other types of use are inadmissible.

The appliance is not suitable for storing and cooling medicines, blood plasma, laboratory preparations or similar substances and products covered by the 2007/47/EC Medical Devices Directive. Any misuse of the appliance may result in damage to or spoilage of stored goods.

Furthermore, the appliance is not suitable for operation in potentially explosive atmospheres.

Disposal notes

The appliance contains reusable materials and should be disposed of properly - not simply with unsorted household refuse. Appliances which are no longer needed must be disposed of in a professional and appropriate way, in accordance with the current local regulations and laws.

When disposing of the appliance, ensure that the refrigerant circuit is not damaged to prevent uncontrolled escape of the refrigerant it contains (data on type plate) and oil.

- Disable the appliance.
- Pull out the mains plug.
- Cut through the connection cable.

⚠ WARNING

Danger of suffocation due to packing material and plastic film!

Do not allow children to play with packaging material.

Take the packaging material to an official collection point.

Description of the appliance

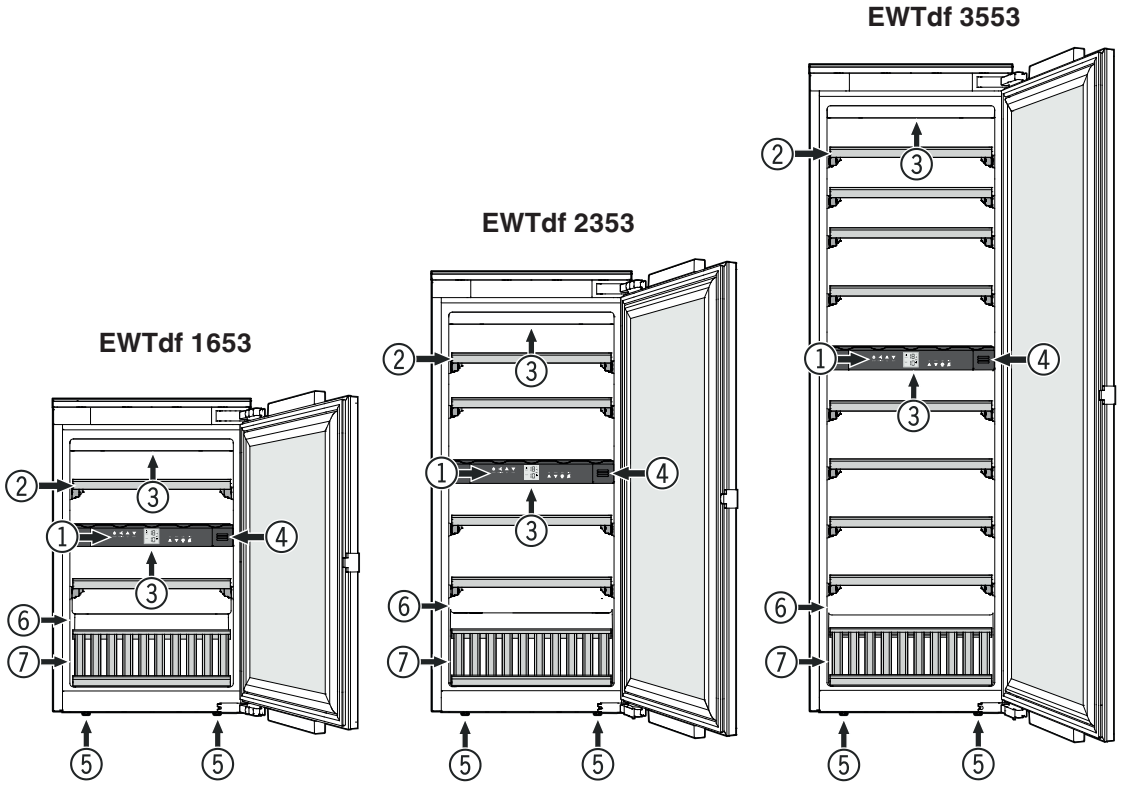

① Operating and control elements

② Pull-out shelves

③ Interior light (LED light strip)

④ Activated charcoal filter

⑤ Adjustable-height feet

⑥ Type plate

⑦ Presentation shelf

Climate rating

The climate rating indicates the room temperature at which the appliance may be operated in order to achieve full refrigeration performance.

The climate rating is indicated on the type plate.

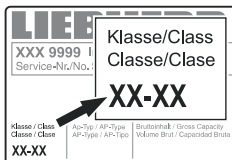

The position of the type plate is shown in the section entitled **Description of the appliance**.

Climate rating	Room temperature
SN	+10°C to +32°C
N	+16°C to +32°C
ST	+16°C to +38°C
T	+16°C to +43°C
SN-ST	+10°C to +38°C
SN-T	+10°C to +43°C

Do not operate the appliance outside the specified room temperature range.

Setting up

- Avoid positioning the appliance in direct sunlight or near cookers, radiators and similar sources of heat.
- Standard EN 378 specifies that the room in which you install your appliance must have a volume of 1 m^3 per 8 g of R 600a refrigerant used in the appliance, so as to avoid the formation of inflammable gas/air mixtures in the room where the appliance is located in the event of a leak in the refrigerant circuit. The quantity of refrigerant used in your appliance is indicated on the type plate on the inside of the appliance.

Electrical connection

Only operate the appliance with **alternating current (AC)**.

The permissible voltage and frequency are indicated on the type plate. The position of the type plate is shown in the section entitled **Description of the appliance**.

The socket must be properly earthed and protected by a fuse.

The tripping current of the fuse must be between 10 A and 16 A.

The socket must not be situated behind the appliance and must be easily accessible.

Do not connect the appliance using an extension cable or extension socket.

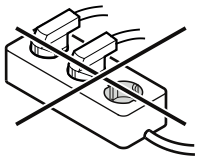

Do not use stand-alone inverters (conversion of direct current to alternating/three-phase current) or energy-saving plugs. Risk of damage to the electronic control system!

Operating and control elements

The electronic control panel has the new "**touch capacitance technology**". Any function can be activated by touching the corresponding icon.

The exact contact point is between the symbol and its label



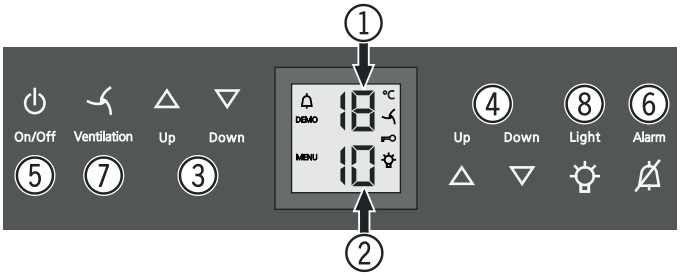

① Upper compartment temperature display
② Lower compartment temperature display
③ Upper compartment temperature setting buttons
④ Lower compartment temperature setting buttons
⑤ On/Off button (switching the appliance on and off)
⑥ Audible warning On/Off button
⑦ Fan switch
⑧ Interior light On/Off button

Symbols in the display

Alarm (symbol flashes if the temperature inside the appliance is too high or too low)

DEMO Demo mode is activated

MENU Setup mode is activated (activating the child lock and adjusting the display brightness

The interior fan runs constantly

Child lock is activated

The interior light is switched on constantly

Switching the appliance on and off

Switching the appliance on

Press the **On/Off** button until the temperature display lights up.



Switching the appliance off

Keep the **On/Off** button pressed for approx. 3 seconds so that the temperature display goes out.

Setting the temperature

The temperature of both compartments can be set separately.

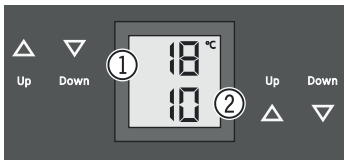

① Upper compartment
② Lower compartment

Reducing the temperature

Press the **Down** button.

Increasing the temperature

Press the **Up** button.

- When pressing one of the buttons for the first time, the display will start to flash.
- Pressing this button again enables you to change the temperature setting.
- The electronic control system will switch over automatically about 5 seconds after the last time you pressed the button, and the actual temperature will be displayed.

The temperature can be set at between +5°C and +20°C.

The following drinking temperatures are recommended for the various types of wine.

Red wines: **+14°C to +20°C**

Rosé wines: **+10°C to +12°C**

White wines: **+8°C to +12°C**

Sparkling wines, Prosecco: **+7°C to +9°C**

Champagne: **+5°C to +7°C**

If you are storing wine for long periods of time, it should be stored at a temperature of between +10°C and +12°C.

Fan

The interior fan ensures a constant and even interior temperature and a suitable climate for wine storage.

The humidity in the appliance can be increased even further by activating the **Ventilation** button. This has a particularly positive effect for long-term storage.



The increased level of humidity prevents the corks from drying out.

Door open alarm

If the door is left open for more than 60 seconds, the audible warning signal will sound.

If the door must be opened for a lengthy period to place items into the appliance, cancel the audible warning signal by pressing the **Alarm** button.



The alarm switches back to standby when the door is shut.

Temperature alarm

If the temperatures in the interior are out of the permitted range, the audible warning signal will sound and the temperature display will flash.

- Cancel the audible warning signal by pressing the **Alarm** button.

After a lengthy power failure, the temperature in the interior may have risen to too high a level. After the power supply returns, the fall in temperature can be watched on the display.

The temperature display will stop flashing as soon as the temperature in the interior has reached the set value.

Temperature alarm after a fault in the appliance

If the appliance develops a fault, the temperature in the interior may rise too high or fall too low. The audible warning signal will sound and the temperature display will flash.

- Cancel the audible warning signal by pressing the **Alarm** button.

If the temperature displayed is too high (warm), first check whether the door is closed correctly.

If the temperature display continues to show a value that is too high or too low after one hour, contact the customer service department.

If **F1, F8, E1, E2, E7** or **E8** appears in the display, the appliance has suffered a fault.

In this case, contact the customer service department.

Set-up mode

In set-up mode, you can set the child lock and adjust the brightness of the display. The child lock is designed to protect the appliance from being switched off and the temperature setting from being changed accidentally.

Activating the child lock

Press 

for 5 seconds. Display = 



Display =



Display =



Display = 

Deactivating the child lock

Press Ventilation for 5 seconds. Display = MENU

Ventilation Display = MENU c0

Ventilation Display = MENU c

On/Off Display = 18 °C / 10

Adjusting the display brightness

Press Ventilation for 5 seconds. Display = MENU c

Up Display = MENU h

Ventilation Display = MENU h 1

Use buttons **Up** and **Down** to select the desired setting.

h0 = display lighting off
h1 = minimum brightness
h5 = maximum brightness

Ventilation Display = MENU h

On/Off Display = 18 °C / 10

The adjusted brightness will be activated after one minute.

Note
If a button is pressed, the display lights up for one minute at maximum brightness.

When commissioning the appliance, the adjusted brightness will only be active once the set interior temperature of the appliance has been reached.

Interior light

The interior of the appliance is lit by an LED light strip at the top of each compartment.

The interior light will always switch on when the appliance door is opened. The interior light will go out approx. 5 seconds after the door is closed.

Press the **Light** button if you want the interior light to be on even when the door is closed.

Light

Note
This function applies to the lighting of both compartments.

Furthermore, the brightness of the lighting can be adjusted.

- Press the **Light** button.
- Press and hold the **Light** button and at the same time press the temperature setting buttons to increase or decrease the brightness.

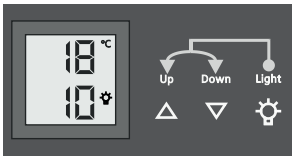

Note: The brightness will change in all compartments.

Labels

The appliance is supplied with one label for each wooden shelf.

Use these to label the type of wine stored on each shelf.

Additional labels can be obtained from your dealer.

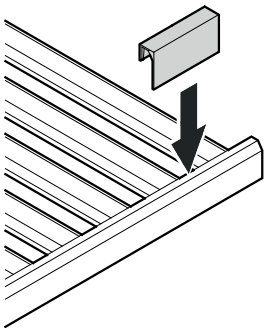

Air exchange with activated charcoal filter

The way in which wines continue to mature depends on the ambient conditions.

The quality of the air is therefore decisive for preserving the wine.

We recommend that you replace the illustrated filter once a year. Filters can be obtained from your dealer.

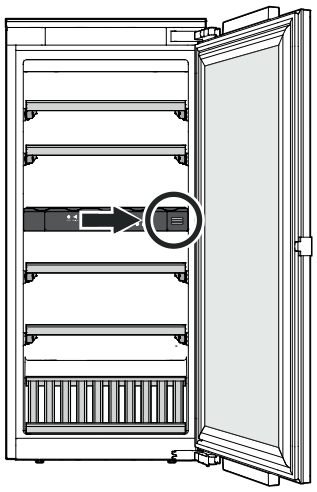

Changing the filter

- Push the cover in and release it again.

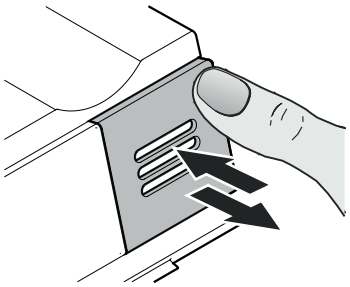

- Pull out the filter.

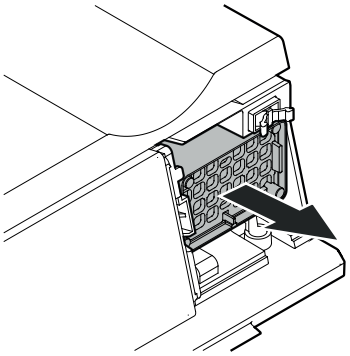

- Insert the filter

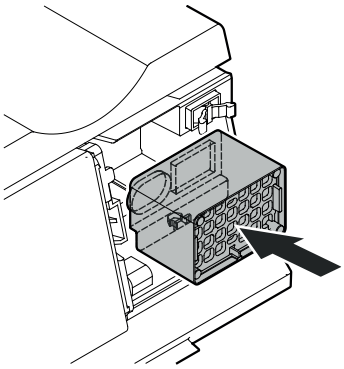

- Insert the cover, push it in as far as it will go and then release it again.

  The cover is automatically locked into place.

  You will hear a click.

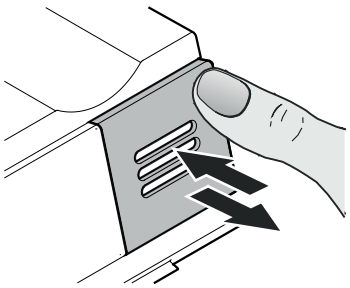

Removing and inserting the wooden shelves

The wooden shelves can be removed for easier cleaning of the inside of the appliance.

Removing the wooden shelf

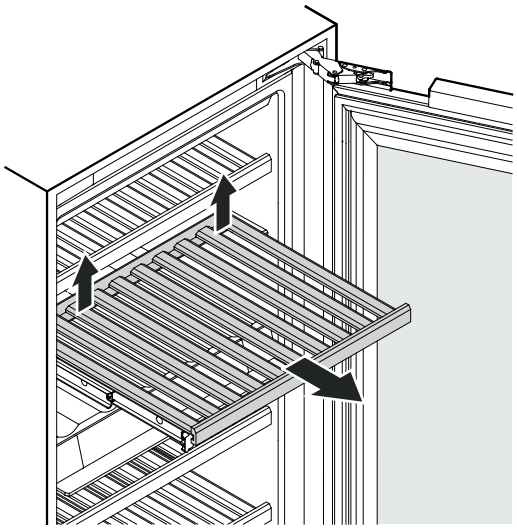

Pull the wooden shelf upwards on the right and left at the back (release) and then remove it towards you.

Inserting the wooden shelf

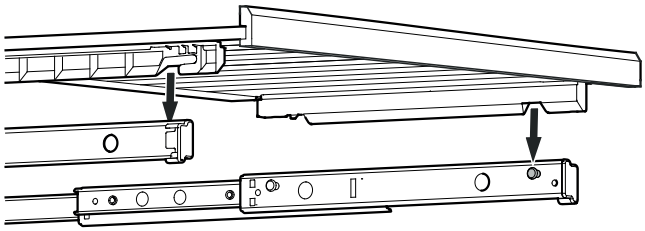

Extend the pull-out rails as far as they will go. Place the front recesses of the wooden shelf on the securing pins.

Slide the wooden shelf together with the pull-out rails into the appliance as far as they will go.

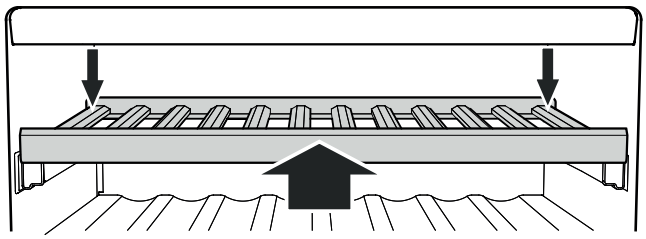

Push the wooden shelf right to the back so that it clicks into place at the front.

Push the wooden shelf downwards on the right and left at the back and click into place.

Storage diagram

for 0.75 l Bordeaux bottles to standard NF H 35-124

EWTdf 1653

Number of bottles

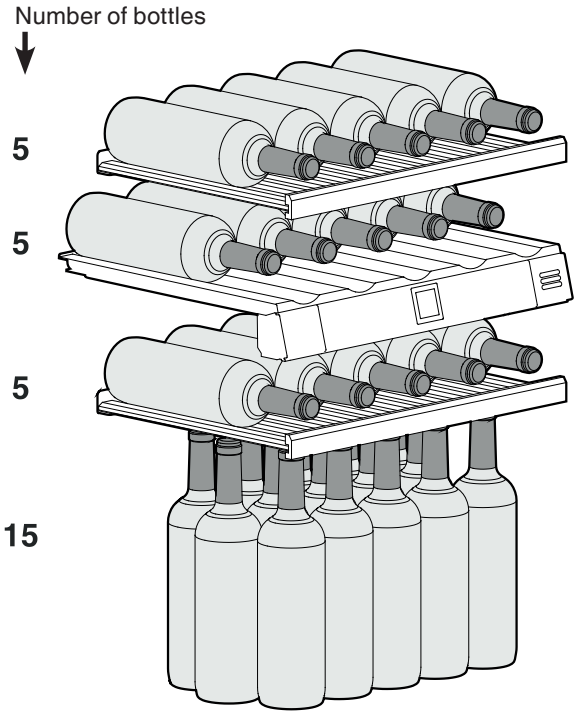

Total 30 bottles

EWTdf 2353

Number of bottles

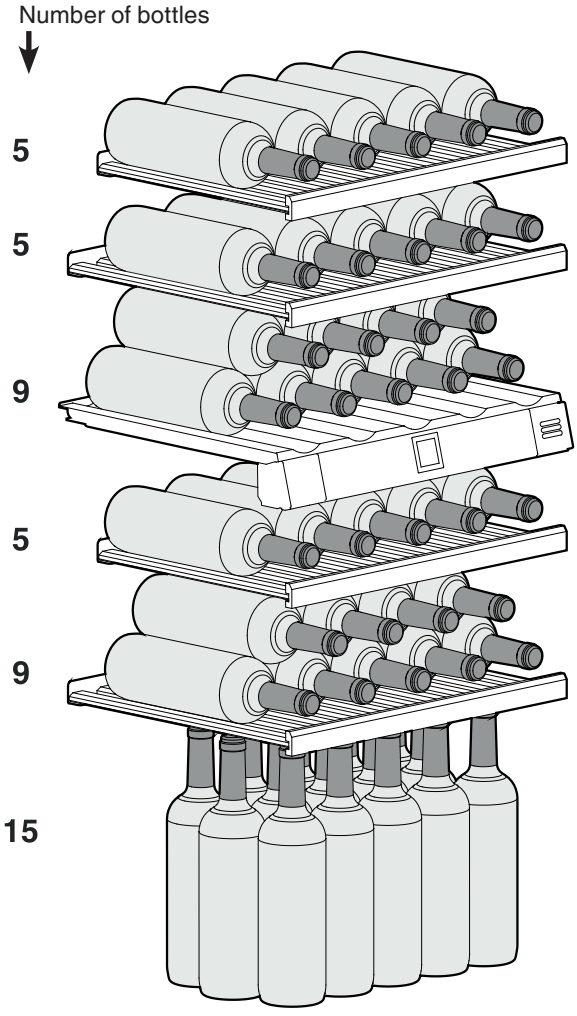

Total 48 bottles

EWTdf 3553

Number of bottles

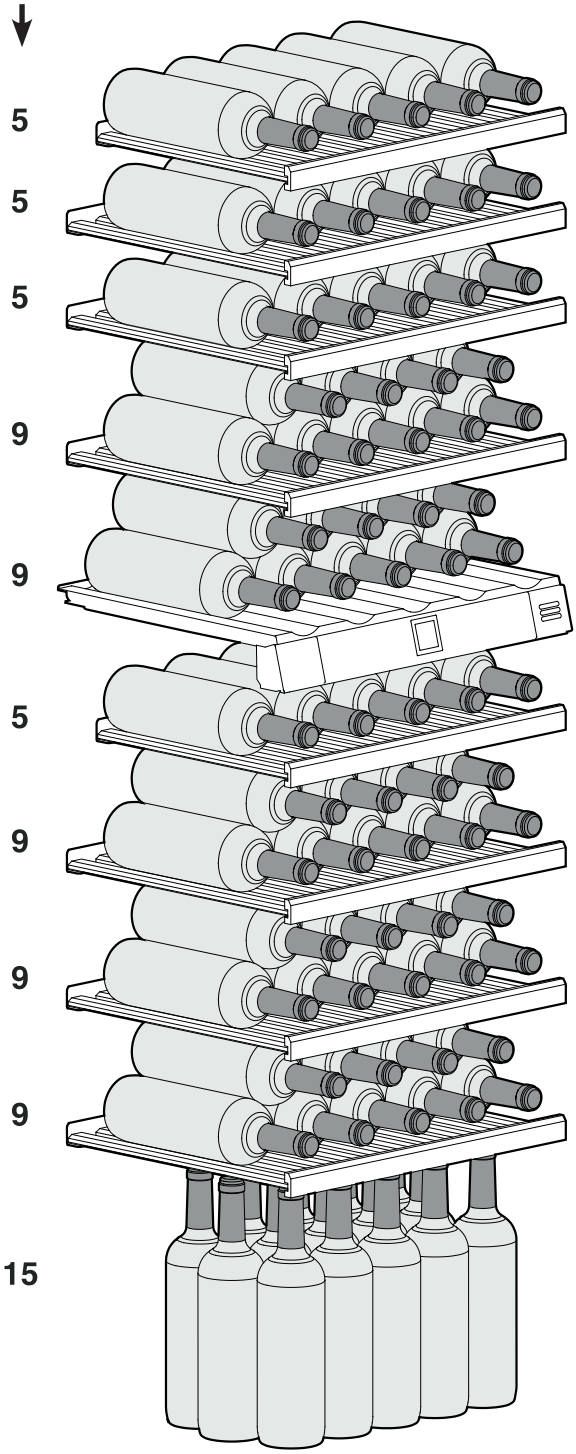

Total 80 bottles

⚠ Important

The maximum load per wooden shelf is 25 kg.

Storage diagram
Presentation shelf

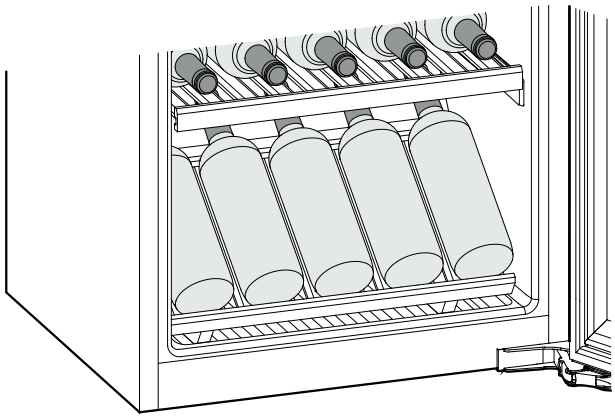

Cleaning

A failure to follow these instructions may result in the food being spoilt.

⚠ WARNING

Before cleaning, always disconnect the appliance from the mains. Pull out the plug or switch off the fuse.

Surfaces which may come into contact with food and accessible drain systems must be cleaned at regular intervals.

If the door is left open for a lengthy period, the temperature in the appliance's compartments may rise dramatically.

- Clean the inside, equipment parts and outer walls with lukewarm water and a little detergent. Do not use chemical solvents or any cleaning agents containing sand or acid.
- Use a glass cleaner to clean the glass surfaces and a commercially available stainless-steel cleaning agent for the stainless-steel surfaces.

⚠ CAUTION

Risk of damage to the appliance components and risk of injury due to hot steam.

Do not use steam cleaning equipment to clean the appliance.

- Ensure that no cleaning water penetrates into the electrical components or ventilation grille.
- Dry all parts well with a cloth.
- Do not damage or remove the type plate on the inside of the appliance. It is very important for servicing purposes.

If the appliance is left empty for a lengthy period, it must be switched off, defrosted, cleaned and dried and the door is to be left open to prevent mould formation.

Malfunctions

- **F0 or F1 appears in the display.**

– The appliance has suffered a fault. Contact the customer service department.

- **The fans inside the appliance are running although the fan function has been deactivated and the compressor (refrigeration unit) is idle.**

– This is a normal operating state depending on the set interior temperature and ambient temperature at the place of installation.

You may be able to rectify the following faults by checking the possible causes yourself.

- **Appliance does not function:**

– Is the appliance switched on?

– Is the plug correctly fitted in the mains socket?

– Is the fuse intact?

- **When inserting the mains plug, the refrigeration unit does not switch on, but a value is shown in the temperature display.**

– Demo mode is activated. Contact the customer service department.

- **Loud running noise:**

– Is the appliance set up firmly on the floor?

– Does the appliance cause nearby items of furniture or objects to vibrate? Please note that noises caused by the refrigerant circuit cannot be avoided.

– Due to the various speed steps, speed-regulated compressors can generate different running noises.
The sound is normal.

- **The temperature is not low enough:**

– Is the temperature setting correct (see "Setting the temperature")?

– Does the separately installed thermometer show the correct reading?

– Is the ventilation system working properly?

– Is the appliance set up too close to a heat source?

- **The compressor runs for a long time.**

– The compressor switches to a low speed when little cold is needed. Although the running time is increased as a result, energy is saved. This is normal in energy-saving models.

- **A low hum.**

– The sound is produced by air flow noise of the fan.
The sound is normal.

- **The internal light does not come on.**

– The appliance is not switched on.
Switch the appliance on.

– The door was open for longer than 15 minutes.
The internal light switches itself off automatically after about 15 minutes if the door is open.

– The LED illumination is faulty or the cover is damaged.

If none of the above causes apply and you cannot rectify the fault yourself, contact the nearest customer service department stating the type designation ①, service number ② and appliance number ③ as indicated on the type plate.

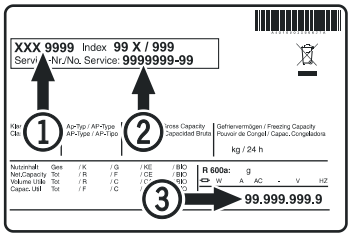

The position of the type plate is shown in the section entitled **Description of the appliance**.

Shutting your appliance down

If your appliance is to be shut down for any length of time, switch it off and disconnect the plug or switch off or unscrew the fuse.

Clean the appliance and leave the door open in order to prevent unpleasant smells.

The appliance complies with the relevant safety regulations and EU Directives 2014/35/EU, 2014/30/EU, 2009/125/EG and 2011/65/EU.

Liebherr Hausgeräte Lienz GmbH
Dr.-Hans-Liebherr-Strasse 1
A-9900 Lienz
Österreich
www.liebherr.com