Übersetzung

Operating instructions

Multi-temperature wine cabinet

Read the operating instructions before switching on for the first time

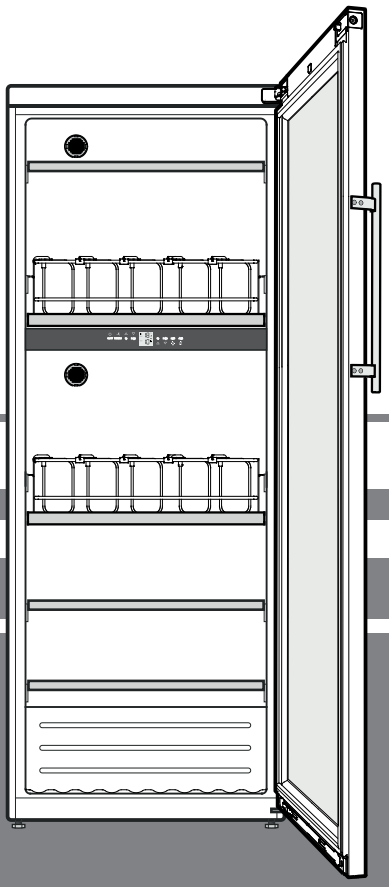

7085 333-01

WTP

LIEBHERR

Vinidor

Content

Description of the appliance 14
Noise emissions from the appliance 14
Disposal notes 14
Safety instructions and warnings 15
Range of appliance use 15
Setting up 16
Climate rating 17
Appliance dimensions 17
Electrical connection 17
Operating and control elements 17
Switching the appliance on and off 17
Fan 17
Setting the temperature 18
Door open alarm 18
Temperature alarm 18
Setup mode 18
Interior light 19
Air exchange with activated charcoal filter 19
Pull-out basket 19
Safety lock 19
Labels 20
Storage diagram 20
Cleaning 20
Shutting your appliance down 20
Malfunctions 21
Changing over door hinges 21

Disposal notes



The appliance contains reusable materials and should be disposed of properly - not simply with unsorted household refuse. Appliances which are no longer needed must be disposed of in a professional and appropriate way, in accordance with the current local regulations and laws.

When disposing of the appliance, ensure that the refrigerant circuit is not damaged to prevent uncontrolled escape of the refrigerant it contains (data on type plate) and oil.

- Disable the appliance.
- Pull out the mains plug.
- Cut through the connection cable.

⚠ WARNING

Danger of suffocation due to packing material and plastic film!

Do not allow children to play with packaging material.

Take the packaging material to an official collection point.

Description of the appliance

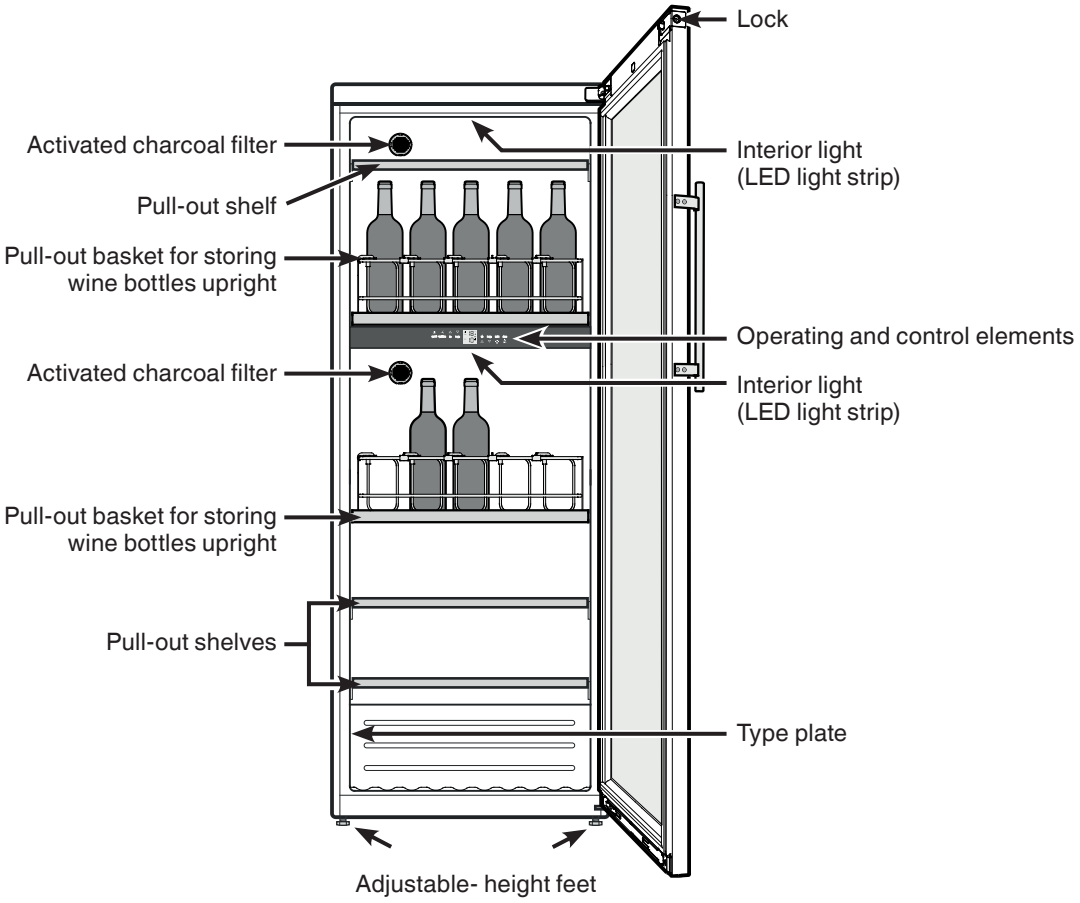

Noise emissions from the appliance

The noise level while the appliance is operating is below 70 dB(A) (relative noise level 1 pW).

Safety instructions and warnings

- To prevent injury or damage to the unit, the appliance should be unpacked and set up by two people.
- In the event that the appliance is damaged on delivery, contact the supplier immediately before connecting to the mains.
- To guarantee safe operation, ensure that the appliance is set up and connected as described in these operating instructions.
- Disconnect the appliance from the mains if any fault occurs. Pull out the plug, switch off or remove the fuse.
- When disconnecting the appliance, pull on the plug, not on the cable.
- Any repairs and work on the appliance should only be carried out by the customer service department, as unauthorised work could prove highly dangerous for the user. The same applies to changing the mains power cable.
- Do not allow naked flames or ignition sources to enter the appliance. When transporting and cleaning the appliance, ensure that the refrigerant circuit is not damaged. In the event of damage, make sure that there are no ignition sources nearby and keep the room well ventilated.
- Do not stand on the plinth, drawers or doors or use them to support anything else.
- This appliance can be used by children of 8 years old and over, and also by persons with restricted physical, sensory or mental capacity or lack of experience and knowledge, if they are supervised or have been instructed on safe use of the appliance and understand the resulting risks. Children must not be allowed to play with the appliance. Cleaning and user maintenance must not be carried out by children without supervision.
- Avoid prolonged skin contact with cold surfaces or chilled/frozen food. This could cause pain, numbness and frostbite. In the case of prolonged skin contact, protective measures should be taken, e.g. gloves should be worn.
- Do not consume food which has been stored for too long, as it could cause food poisoning.
- Do not store explosives or sprays using combustible propellants such as butane, propane, pentane, etc. in the appliance. Electrical components might cause leaking gas to ignite. You may identify such sprays by the printed contents or a flame symbol.
- Do not use electrical appliances inside the appliance.
- If you have a lockable appliance, do not keep the key near the appliance or within reach of children.
- The appliance is designed for use in enclosed areas. Do not operate the appliance outdoors or in areas where it is exposed to splash water or damp conditions.
- The LED light strips illuminate the interior of the appliance. They are not suitable for lighting a room.
- When transporting or operating the appliance at an altitude of more than 1500 m above sea level, the glass pane in the door can break due to the reduction in air pressure. Broken fragments are sharp-edged and can cause serious injury.

Range of appliance use

The appliance is suitable solely for storing wine in a domestic environment or similar. This includes, for example, use

- in staff kitchenettes, bed and breakfast establishments,
- by guests in cottages, hotels, motels and other forms of accommodation,
- in catering and similar services in the wholesale trade.

Use the appliance solely as is customary within a domestic environment. All other types of use are inadmissible.

The appliance is not suitable for storing and cooling medicines, blood plasma, laboratory preparations or similar substances and products covered by the 2007/47/EC Medical Devices Directive. Any misuse of the appliance may result in damage to or spoilage of stored goods.

Furthermore, the appliance is not suitable for operation in potentially explosive atmospheres.

Setting up

- Avoid positioning the appliance in direct sunlight or near cookers, radiators and similar sources of heat.
- The floor on which the appliance stands should be horizontal and level. Compensate for uneven floors with the adjustable feet.
- Do not cover ventilation openings or grille. →

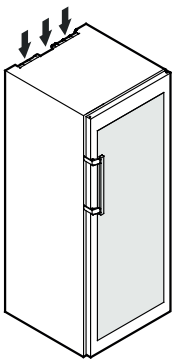

- Standard EN 378 specifies that the room in which you install your appliance must have a volume of 1 m^3 per 8 g of R 600a refrigerant used in the appliance, so as to avoid the formation of inflammable gas/air mixtures in the room where the appliance is located in the event of a leak in the refrigerant circuit. The quantity of refrigerant used in your appliance is indicated on the type plate on the inside of the appliance.
- Always install the appliance directly against the wall.
- To ensure that the stated energy consumption is achieved, the wall spacers supplied with the appliance must be used. This increases the depth of the appliance by approx. 35 mm.

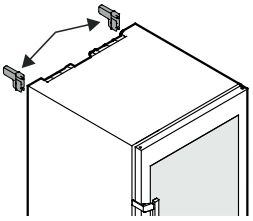

The appliance is fully operational even if the spacers are not used. It does, however, have a slightly higher energy consumption.

Fit the spacers to the back of the appliance on the left and right at the top.

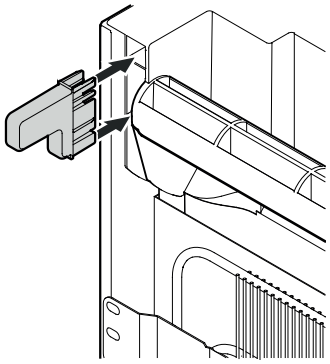

- Place the appliance in its final position at the place of installation.
  Extend the adjustable foot at the bottom hinge bracket until it rests on the floor and then make a further 90° turn.

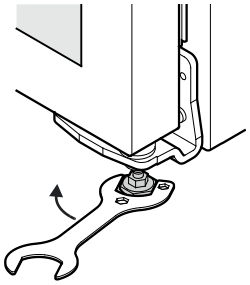

- If several appliances are installed next to each other, leave a gap of 50 mm between them.
  If this gap is too narrow, condensation forms between the side walls.

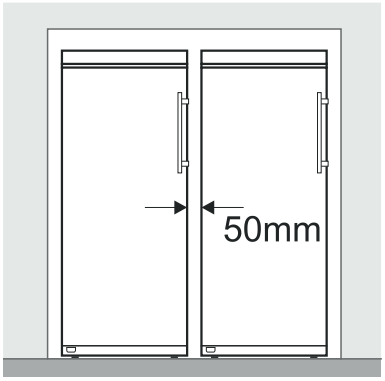

- To adapt the height of the appliance to the surrounding furniture a top unit can be added.

  A gap of at least 50 mm depth must be provided behind and along the entire width of this unit so as to ensure sufficient ventilation. The area of ventilation underneath the ceiling should be at least 300 cm^2.

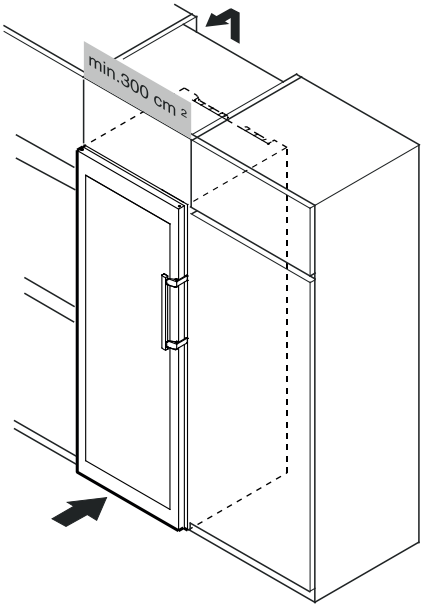

Climate rating

The climate rating indicates the room temperature at which the appliance may be operated in order to achieve full refrigeration performance.

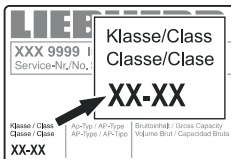

The climate rating is indicated on the type plate.

The position of the type plate is shown in the section entitled **Description of the appliance**.

Climate rating	Room temperature
4 (SN)	+10°C to +32°C
4 (N)	+16°C to +32°C
4+ (ST)	+16°C to +38°C
4+ (SN-ST)	+10°C to +38°C
5 (T)	+16°C to +43°C
5 (SN-T)	+10°C to +43°C

Do not operate the appliance outside the specified room temperature range.

Appliance dimensions

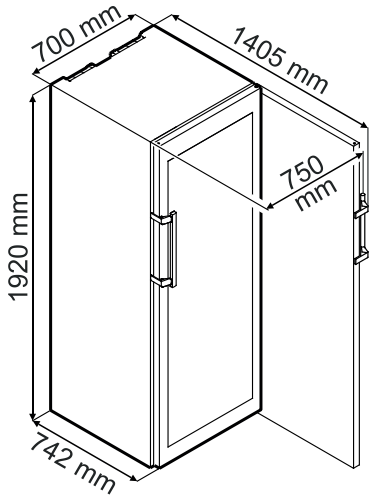

Electrical connection

Only operate the appliance with **alternating current (AC)**.

The permissible voltage and frequency are indicated on the type plate. The position of the type plate is shown in the section entitled **Description of the appliance**.

The socket must be properly earthed and protected by a fuse.

The tripping current of the fuse must be between 10 A and 16 A.

The socket must not be situated behind the appliance and must be easily accessible.

Do not connect the appliance using an extension cable or extension socket.

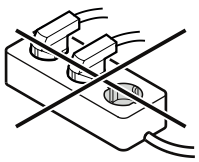

Do not use stand-alone inverters (conversion of direct current to alternating/three-phase current) or energy-saving plugs. Risk of damage to the electronic control system!

Operating and control elements

The electronic control panel has the "**touch capacitance technology**". Any function can be activated by touching the corresponding icon.

The exact contact point is between the symbol and its label



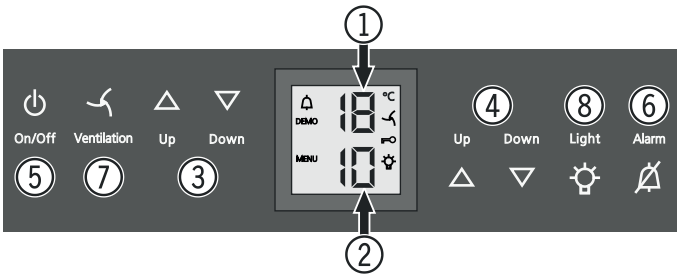

① Upper compartment temperature display
② Lower compartment temperature display
③ Upper compartment temperature setting buttons
④ Lower compartment temperature setting buttons
⑤ On/Off button (switching the appliance on and off)
⑥ Audible warning On/Off button
⑦ Fan switch
⑧ Interior light On/Off button

Symbols in the display

Alarm (symbol flashes if the temperature inside the appliance is too high or too low)

DEMO Demo mode is activated

MENU Setup mode is activated (activating the child lock and adjusting the display brightness

The interior fan runs constantly

Child lock is activated

The interior light is switched on constantly

Switching the appliance on and off

Switching the appliance on

Press the **On/Off** button until the temperature display lights up.

On/Off

Switching the appliance off

Keep the **On/Off** button pressed for approx. 3 seconds so that the temperature display goes out.

Fan

The interior fan ensures a constant and even interior temperature and a suitable climate for wine storage.

The humidity in the appliance can be increased even further by activating the **Ventilation** button. This has a particularly positive effect for long-term storage.

Ventilation

The increased level of humidity prevents the corks from drying out.

Note
If the appliance is operated in a low ambient temperature, the fan may also run when the fan function is deactivated.

Setting the temperature

The temperature of both compartments can be set separately.

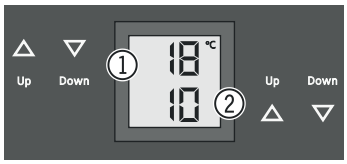

① Upper compartment
② Lower compartment

Reducing the temperature Press the **Down** button.

Increasing the temperature
Press the **Up** button.

- When pressing one of the buttons for the first time, the display will start to flash.
- Pressing this button again enables you to change the temperature setting.
- The electronic control system will switch over automatically about 5 seconds after the last time you pressed the button, and the actual temperature will be displayed.

The temperature can be set at between +5°C and +20°C.

The following drinking temperatures are recommended for the various types of wine.

Red wines: **+14°C to +20°C**

Rosé wines: **+10°C to +12°C**

White wines: **+8°C to +12°C**

Sparkling wines, Prosecco: **+7°C to +9°C**

Champagne: **+5°C to +7°C**

If you are storing wine for long periods of time, it should be stored at a temperature of between +10°C and +12°C.

Door open alarm

If the door is left open for more than 60 seconds, the audible warning signal will sound.

If the door must be opened for a lengthy period to place items into the appliance, cancel the audible warning signal by pressing the **Alarm** button.

Alarm



The alarm switches back to standby when the door is shut.

Temperature alarm

If the temperatures in the interior are out of the permitted range, the audible warning signal will sound and the temperature display will flash.

• Cancel the audible warning signal by pressing the **Alarm** button.

The temperature display will stop flashing as soon as the temperature in the interior has reached the set value.

Temperature alarm after a fault in the appliance

If the appliance develops a fault, the temperature in the interior may rise too high or fall too low. The audible warning signal will sound and the temperature display will flash.

If the temperature displayed is too high (warm), first check whether the door is closed correctly.

If the temperature display continues to show a value that is too high or too low after one hour, contact the customer service department.

• Cancel the audible warning signal by pressing the **Alarm** button.

If **F1, F8, E1, E2, E7,** or **E8** appears in the display, the appliance has suffered a fault. In this case, contact the customer service department.

Setup mode

In set-up mode you can set the child lock and adjust the brightness of the display. The child lock is designed to protect the appliance from being switched off and the temperature setting from being changed accidentally.

Activating the child lock

Press 

for 5 seconds. Display = C



Display = C 1



Display = C

Exit setup mode by pressing the **On/Off** button.

Deactivating the child lock

Press 

for 5 seconds. Display = C



Display = C 0



Display = C

Exit setup mode by pressing the **On/Off** button.

Adjusting the display brightness

Press 

for 5 seconds. Display = C



Display = h



Display = h 1

Use buttons **Up** and **Down** to select the desired setting.

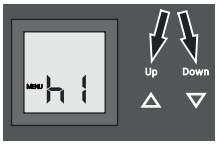

h0 = display lighting off
h1 = minimum brightness
h5 = maximum brightness



Display = h

Exit setup mode by pressing the **On/Off** button.

The adjusted brightness will be activated after one minute.

Note
If a button is pressed, the display lights up for one minute at maximum brightness.

When commissioning the appliance, the adjusted brightness will only be active once the set interior temperature of the appliance has been reached.

Interior light

The interior of the appliance is lit by an LED light strip at the top of each compartment.

The interior light will always switch on when the appliance door is opened.

The interior light will go out approx. 5 seconds after the door is closed.

Light

Press the **Light** button if you want the interior light to be on even when the door is closed.

Note

This function applies to the lighting of both compartments.

Furthermore, the brightness of the lighting can be adjusted.

- Press the **Light** button.
- Press and hold the **Light** button and at the same time press the temperature setting buttons to increase or decrease the brightness.

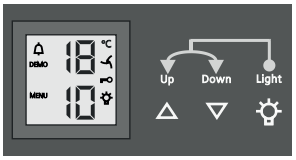

Note

The brightness will change in all compartments.

The light intensity of the LED light corresponds to laser class 1/1M.

⚠ Important

The light cover may only be removed by customer service staff.

If the cover is removed, do not look directly at the light through optical lenses from close distance. This can damage your eyes.

Air exchange with activated charcoal filter

The way in which wines continue to mature depends on the ambient conditions.

The quality of the air is therefore decisive for preserving the wine.

We recommend that you replace the illustrated filter once a year.

Filters can be obtained from your dealer.

Changing the filter

Take the filter by the handle. Turn it 90° to the left or right and remove.

Inserting the filter

Insert with the handle in a vertical position. Turn it 90° to the left or right until it clicks into place.

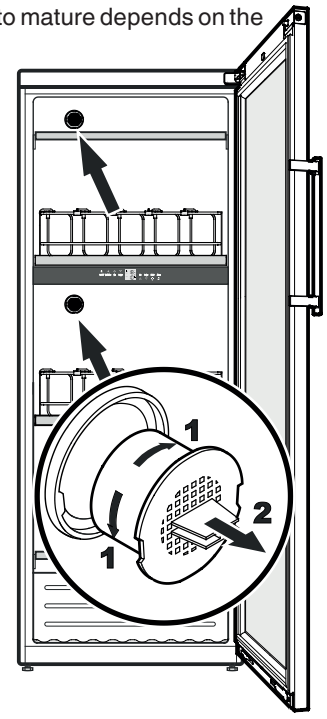

Pull-out basket

The bottles are stored upright in the pull-out basket making them easy to remove.

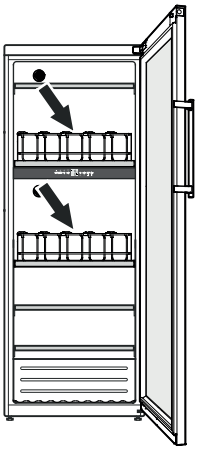

Slide the support bars ① into the required position.

Hold them at both ends to move them.

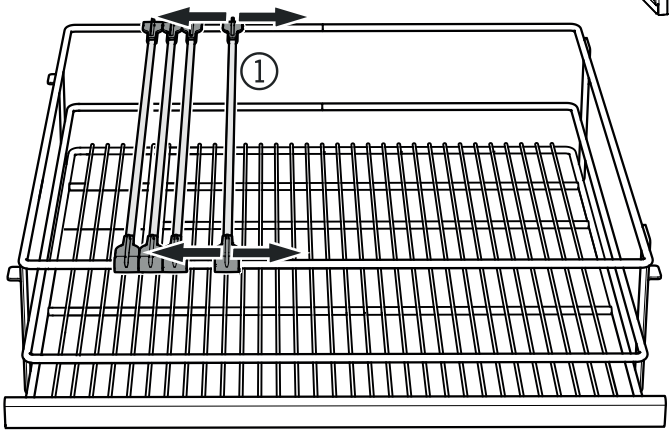

Lock the bottle holder in the required position on one of the support bars.

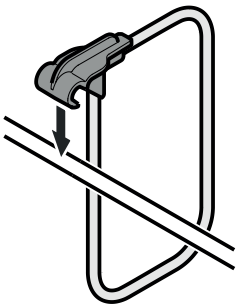

Removing a bottle holder

Hold the bottle holder by the plastic part and turn it.

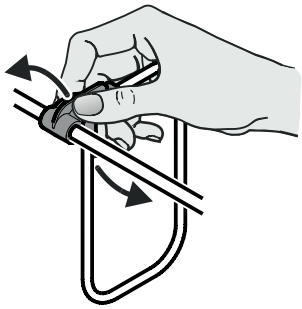

Safety lock

The lock in the appliance door is equipped with a safety mechanism.

Locking the appliance

- Insert the key as shown by arrow **1**.
- Turn the key 180°.

To unlock the appliance, the same procedure must be repeated in the same order.

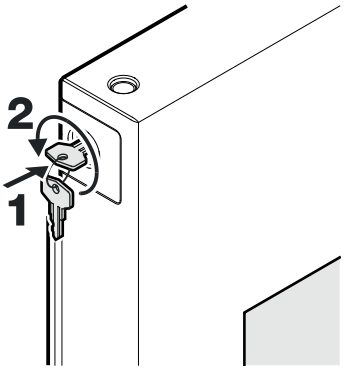

Labels

The appliance is supplied with one label for each wooden shelf.

Use these to label the type of wine stored on each shelf.

Additional labels can be obtained from your dealer.

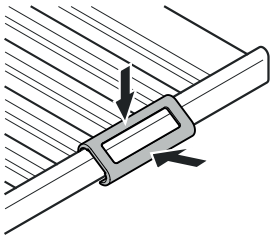

Click the label holder into place and slide the label in from the side.

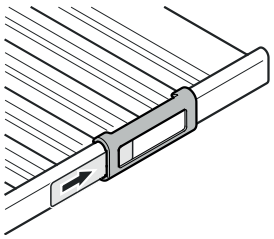

Storage diagram

for 0.75 l Bordeaux bottles to standard NF H 35-124

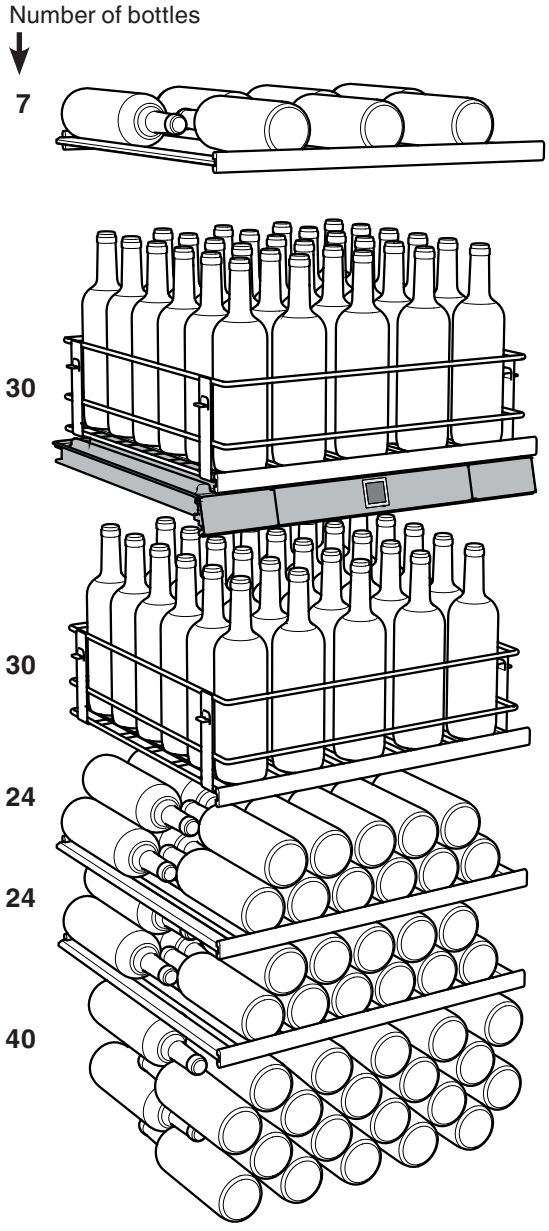

Total 155 bottles

⚠ Important

The maximum load per wooden shelf is 35 kg.

Cleaning

Clean the appliance at least twice per year.

Before cleaning always switch off the appliance. Pull out the mains plug or remove/unscrew the fuse.

- Clean the inside and outer walls with lukewarm water and a little detergent. Do not use abrasive or acid cleaners or chemical solvents.
- Use a glass cleaner to clean the glass surfaces and a commercially available stainless-steel cleaning agent for the stainless-steel surfaces.

Do not use steam cleaners because of the risk of injury and damage.

- Ensure that no cleaning water penetrates into the electrical components or ventilation grille.
- Do not damage or remove the type plate on the inside of the appliance. It is very important for servicing purposes.

Shutting your appliance down

If your appliance is to be shut down for any length of time, switch it off and disconnect the plug or switch off or unscrew the fuse.

Clean the appliance and leave the door open in order to prevent unpleasant smells.

The appliance complies with the relevant safety regulations and EU Directives 2014/30/EU and 2014/35/EU.

Malfunctions

- **F1, F8, E1, E2, E7 or E8 appears in the display.**

– The appliance has suffered a fault. Contact the customer service department.

- **When inserting the mains plug, the refrigeration unit does not switch on, but a value is shown in the temperature display.**

– Demo mode is activated.

Contact the customer service department.

You may be able to rectify the following faults by checking the possible causes yourself.

- **Appliance does not function:**

– Is the appliance switched on?

– Is the plug correctly fitted in the mains socket?

– Is the fuse intact?

- **Loud running noise:**

– Is the appliance set up firmly on the floor?

– Does the appliance cause nearby items of furniture or objects to vibrate? Please note that noises caused by the refrigerant circuit cannot be avoided.

- **The temperature is not low enough:**

– Is the temperature setting correct (see "Setting the temperature")?

– Does the separately installed thermometer show the correct reading?

– Is the ventilation system working properly?

– Is the appliance set up too close to a heat source?

If none of the above causes apply and you cannot rectify the fault yourself, contact the nearest customer service department stating the type designation ①, service number ② and appliance number ③ as indicated on the type plate.

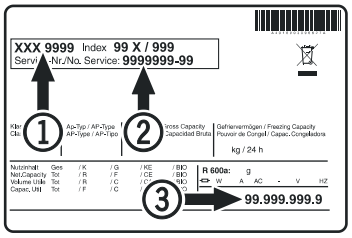

The position of the type plate is shown in the section entitled **Description of the appliance**.

Changing over door hinges

Door hinges should only be changed by a trained expert.

Changing the door hinges must be done by two people.

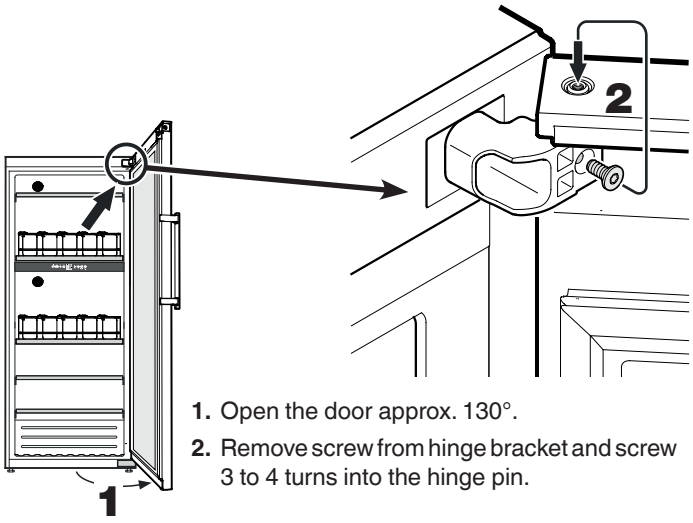

1. Open the door approx. 130°.

2. Remove screw from hinge bracket and screw 3 to 4 turns into the hinge pin.

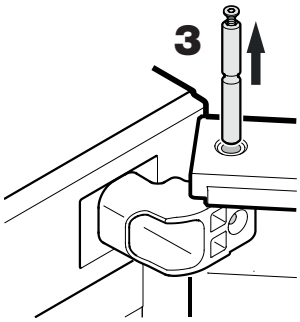

Important
The door must now be held secure by somebody.

3. Pull out hinge pin.

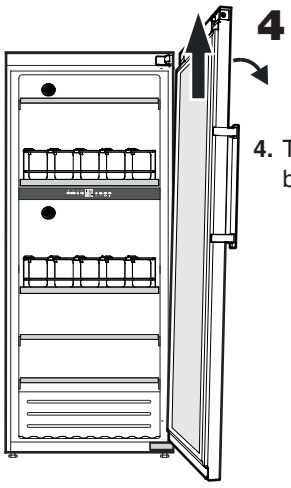

4. Tilt door slightly to the side and remove by lifting upwards.

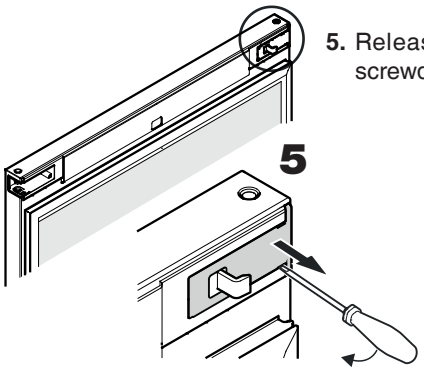

5. Release cover with a small screwdriver and remove.

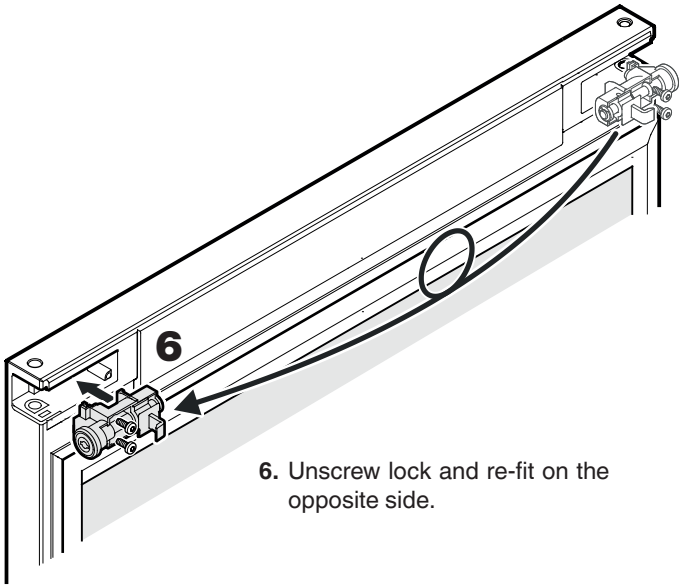

6. Unscrew lock and re-fit on the opposite side.

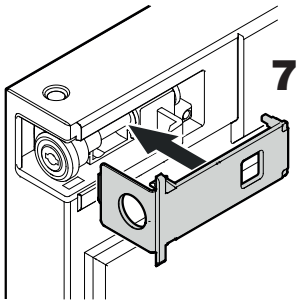

7. Click cover into place.

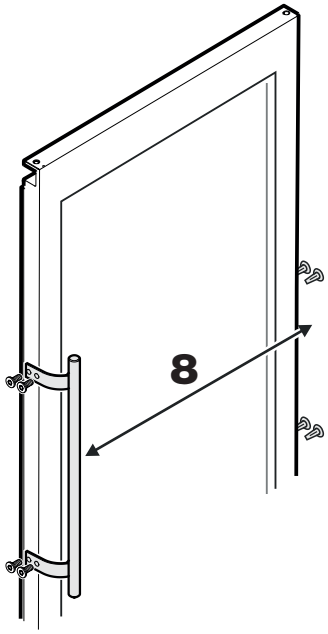

8. Transfer door handle and plugs to the other side.

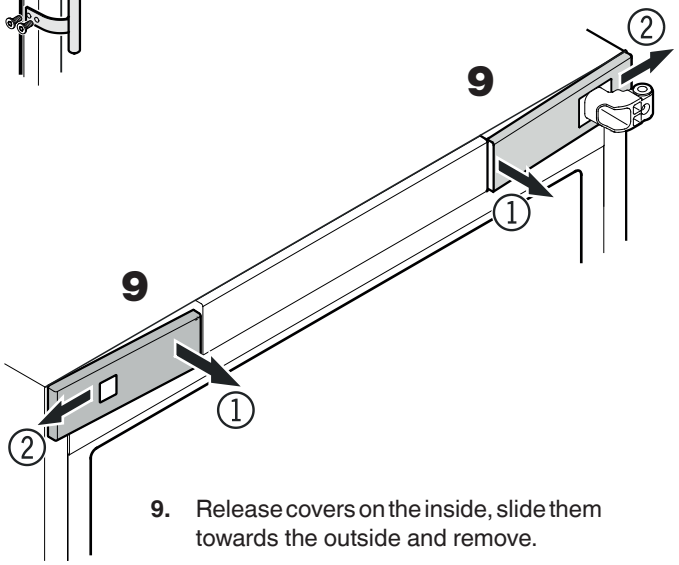

9. Release covers on the inside, slide them towards the outside and remove.

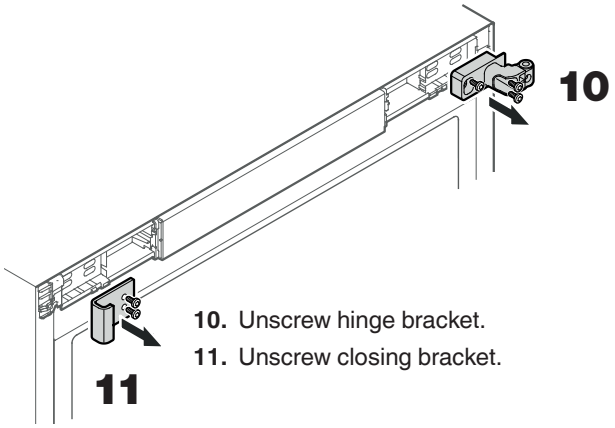

10. Unscrew hinge bracket.

11. Unscrew closing bracket.

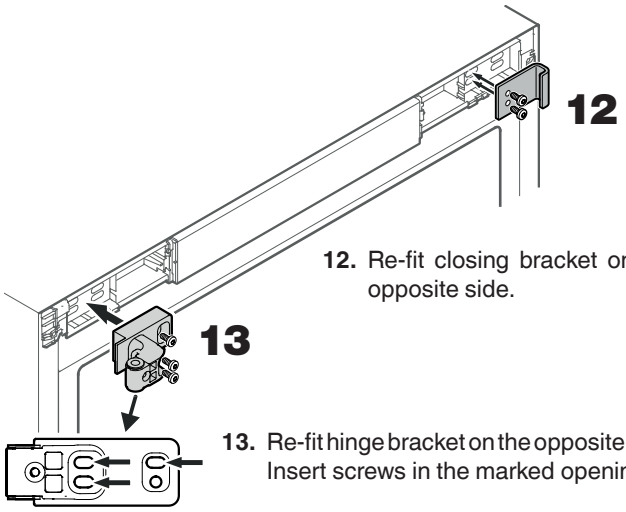

12. Re-fit closing bracket on the opposite side.

13. Re-fit hinge bracket on the opposite side. Insert screws in the marked openings.

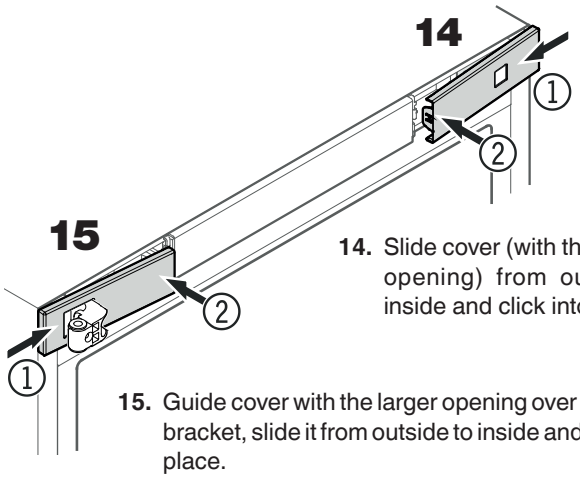

14. Slide cover (with the smaller opening) from outside to inside and click into place.

15. Guide cover with the larger opening over the hinge bracket, slide it from outside to inside and click into place.

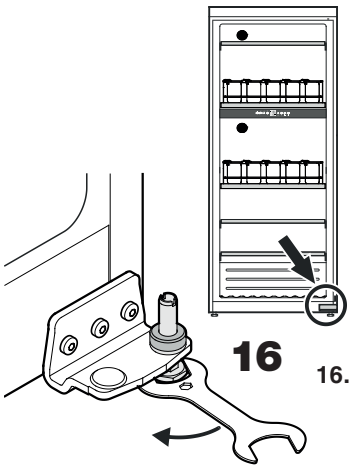

16. Undo adjustable foot with the spanner provided.

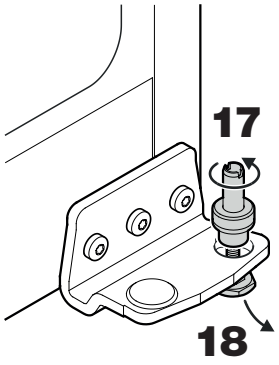

17. Pull hinge pin upwards and unscrew it from the adjustable foot.

18. Pull adjustable foot downwards to remove.

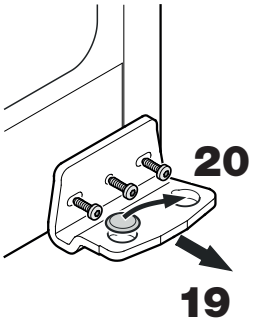

19. Unscrew hinge bracket.

20. Transfer cover to the opposite side.

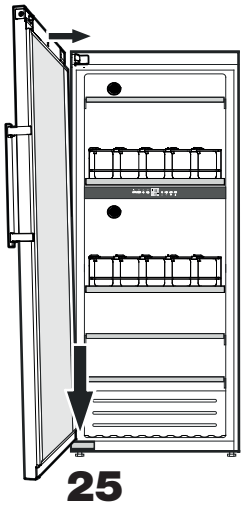

25. Place door on pin and move the top of it to the hinge bracket.

Important
The door must now be held secure by somebody.

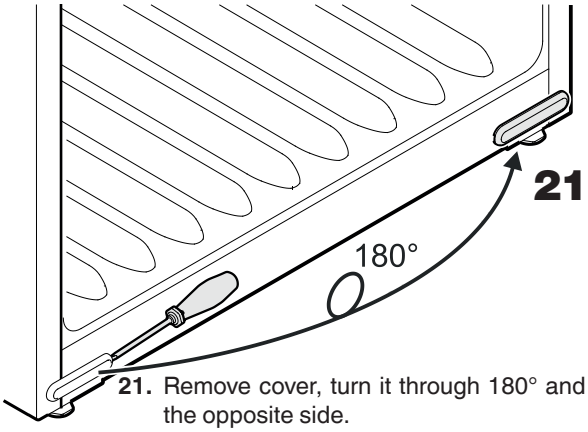

21. Remove cover, turn it through 180° and re-fit on the opposite side.

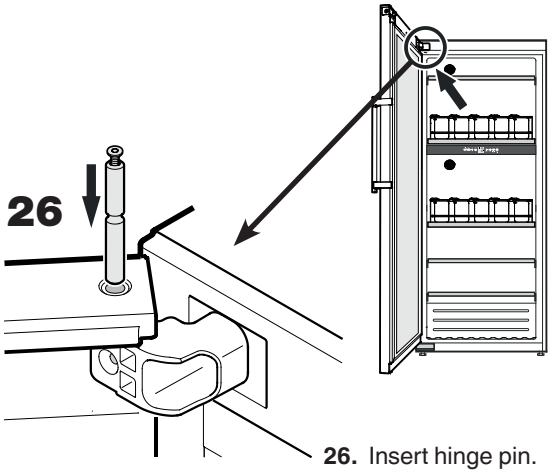

26. Insert hinge pin.

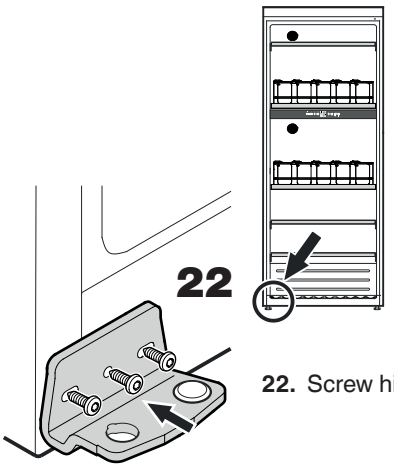

22. Screw hinge bracket into place.

Front view of top hinge bracket

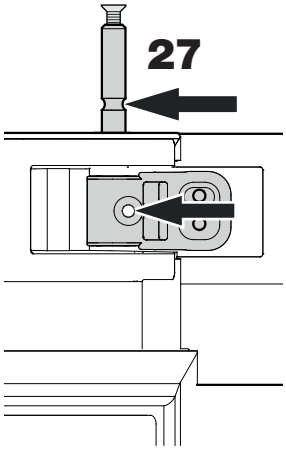

27. Push in hinge pin until groove in the pin lines up with bore hole in the hinge bracket.

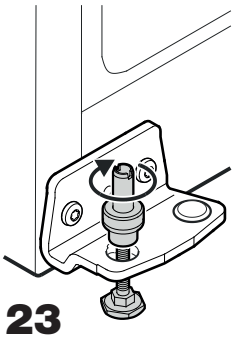

23. Fit adjustable foot from underneath and attach hinge pin to it.

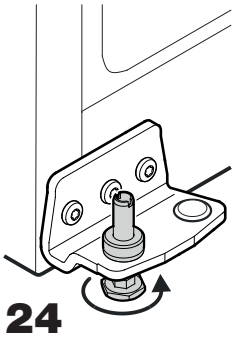

24. Insert pin fully into hinge bracket and tighten adjustable foot by hand.

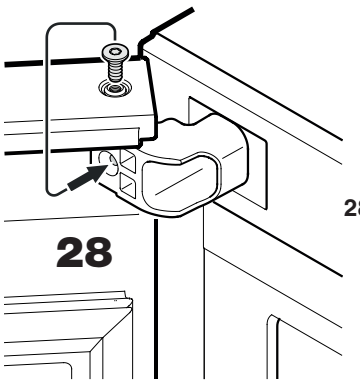

28. Undo screw in hinge pin and screw into bore hole in hinge bracket.

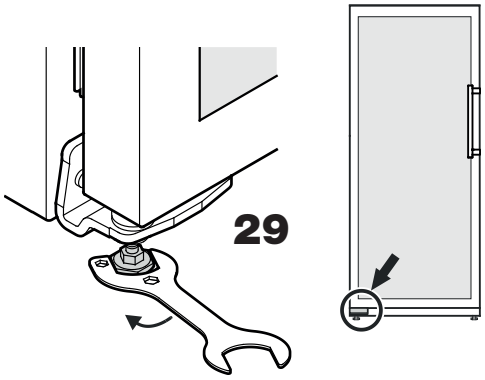

29. Place the appliance in its final position at the place of installation.

Extend the adjustable foot at the bottom hinge bracket until it rests on the floor and then make a further 90° turn.

Adjusting the lateral tilt of the door

If the door is at an angle, adjust the angle.

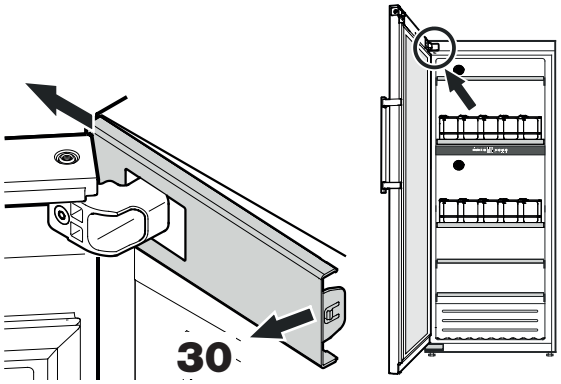

30. Release cover on the inside and slide to the outside.

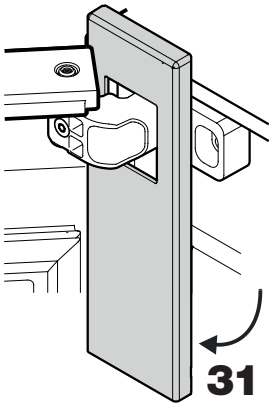

31. Turn cover downwards.

Front view of top hinge bracket

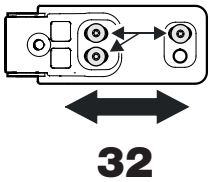

32. Undo screws and slide hinge bracket to the right or left.

Tighten screws.

Re-fit cover following the instructions above in reverse order.

Close door and check that it is aligned with the side walls of the appliance.

Liebherr Hausgeräte Lienz GmbH
Dr.-Hans-Liebherr-Strasse 1
A-9900 Lienz
Österreich
www.liebherr.com