Operating instructions

Wine storage cabinet

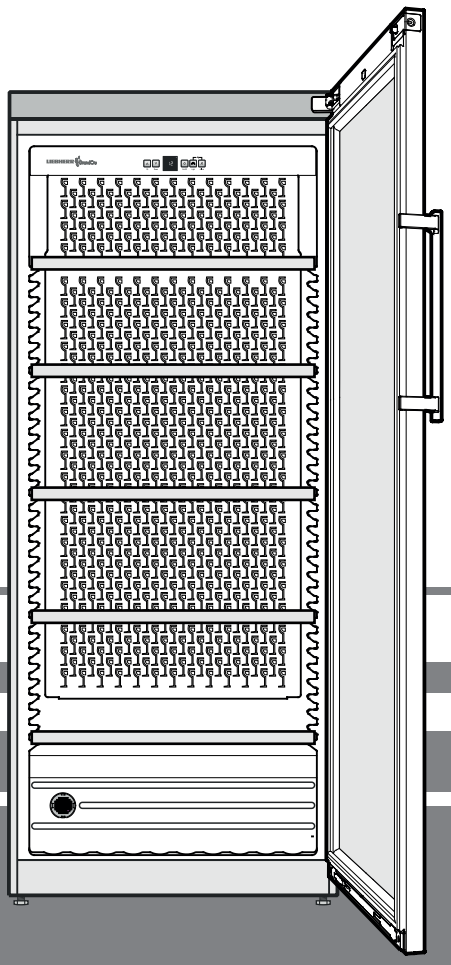

7083 487-02

WKt

LIEBHERR GrandCru

Disposal notes

The appliance contains reusable materials and should be disposed of properly - not simply with unsorted household refuse. Appliances which are no longer needed must be disposed of in a professional and appropriate way, in accordance with the current local regulations and laws.

When disposing of the appliance, ensure that the refrigerant circuit is not damaged to prevent uncontrolled escape of the refrigerant it contains (data on type plate) and oil.

- Disable the appliance.
- Pull out the mains plug.
- Cut through the connection cable.

⚠ WARNING

Danger of suffocation due to packing material and plastic film! Do not allow children to play with packaging material. Take the packaging material to an official collection point.

Saving energy

- Always ensure good ventilation. Do not cover ventilation openings or grille.
- Always keep fan louvres clear.
- Do not place appliance in areas of direct sunlight or next to a stove, heater or similar object.
- The energy consumption depends on the installation conditions, e.g. the ambient temperature.
- Keep the time the appliance is open to a minimum.

Accumulated dust increases the energy consumption:

- Once a year, dust the refrigerating unit together with the metal grille of the heat exchanger at the back of the appliance.

Range of appliance use

The appliance is suitable solely for storing wine in a domestic environment or similar.

This includes, for example, use

- in staff kitchenettes, bed and breakfast establishments,
- by guests in cottages, hotels, motels and other forms of accommodation,
- in catering and similar services in the wholesale trade.

Use the appliance solely as is customary within a domestic environment. All other types of use are inadmissible.

The appliance is not suitable for storing and cooling medicines, blood plasma, laboratory preparations or similar substances and products covered by the 2007/47/EC Medical Devices Directive. Any misuse of the appliance may result in damage to or spoilage of stored goods.

Furthermore, the appliance is not suitable for operation in potentially explosive atmospheres.

Product data

Product data is included with the appliance, as per Directive (EU) 2017/1369. The complete product data sheet is available on the Liebherr website under Downloads.

Description of the appliance

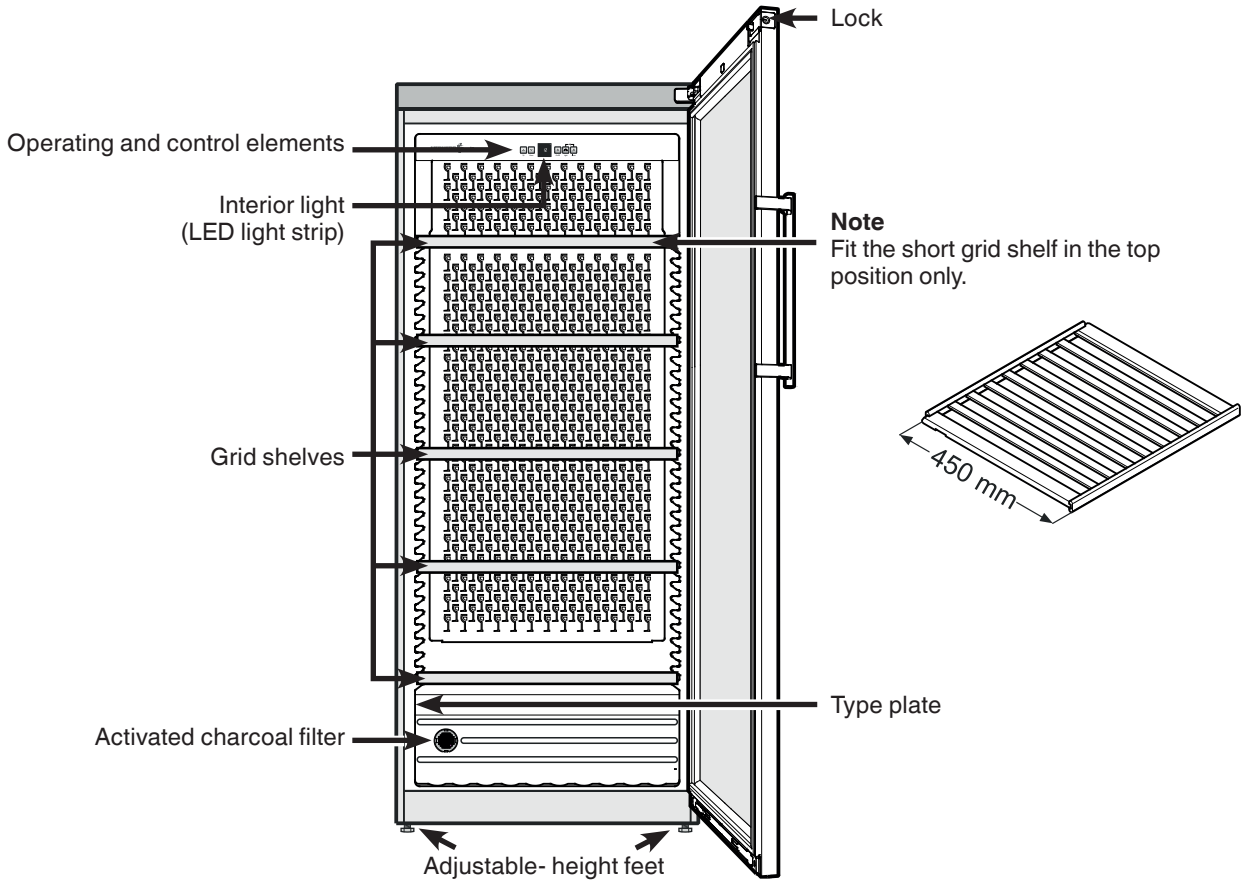

Safety instructions and warnings

- To prevent injury or damage to the unit, the appliance should be unpacked and set up by two people.
- In the event that the appliance is damaged on delivery, contact the supplier immediately before connecting to the mains.
- To guarantee safe operation, ensure that the appliance is set up and connected as described in these operating instructions.
- Disconnect the appliance from the mains if any fault occurs. Pull out the plug, switch off or remove the fuse.
- When disconnecting the appliance, pull on the plug, not on the cable.
- Any repairs and work on the appliance should only be carried out by the customer service department, as unauthorised work could prove highly dangerous for the user. The same applies to changing the mains power cable.
- Do not allow naked flames or ignition sources to enter the appliance. When transporting and cleaning the appliance, ensure that the refrigerant circuit is not damaged. In the event of damage, make sure that there are no ignition sources nearby and keep the room well ventilated.
- Do not stand on the plinth, drawers or doors or use them to support anything else.
- This appliance can be used by children of 8 years old and over, and also by persons with restricted physical, sensory or mental capacity or lack of experience and knowledge, if they are supervised or have been instructed on safe use of the appliance and understand the resulting risks. Children must not be allowed to play with the appliance. Cleaning and user maintenance must not be carried out by children without supervision.
- Avoid prolonged skin contact with cold surfaces or chilled/frozen food. This could cause pain, numbness and frostbite. In the case of prolonged skin contact, protective measures should be taken, e.g. gloves should be worn.
- Do not consume food which has been stored for too long, as it could cause food poisoning.
- Do not store explosives or sprays using combustible propellants such as butane, propane, pentane, etc. in the appliance. Electrical components might cause leaking gas to ignite. You may identify such sprays by the printed contents or a flame symbol.
- Do not use electrical appliances inside the appliance.
- If you have a lockable appliance, do not keep the key near the appliance or within reach of children.
- The appliance is designed for use in enclosed areas. Do not operate the appliance outdoors or in areas where it is exposed to splash water or damp conditions.
- The LED light strip illuminates the interior of the appliance. It is not suitable for lighting a room.
- When transporting or operating the appliance at an altitude of more than 1500 m above sea level, the glass pane in the door can break due to the reduction in air pressure. Broken fragments are sharp-edged and can cause serious injury.

Climate rating

The climate rating indicates the room temperature at which the appliance may be operated in order to achieve full refrigeration performance.

The climate rating is indicated on the type plate.

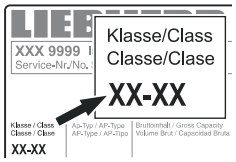

The position of the type plate is shown in the section entitled **Description of the appliance**.

Climate rating	Room temperature
SN	+10°C to +32°C
N	+16°C to +32°C
ST	+16°C to +38°C
SN-ST	+10°C to +38°C
T	+16°C to +43°C
SN-T	+10°C to +43°C

Do not operate the appliance outside the specified room temperature range.

Setting up

- Avoid positioning the appliance in direct sunlight or near cookers, radiators and similar sources of heat.
- The floor on which the appliance stands should be horizontal and level. Compensate for uneven floors with the adjustable feet.
- Do not cover ventilation openings or grille. →

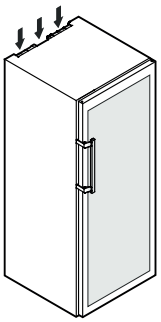

- Standard EN 378 specifies that the room in which you install your appliance must have a volume of 1 m^3 per 8 g of R 600a refrigerant used in the appliance, so as to avoid the formation of inflammable gas/air mixtures in the room where the appliance is located in the event of a leak in the refrigerant circuit. The quantity of refrigerant used in your appliance is indicated on the type plate on the inside of the appliance.
- Always install the appliance directly against the wall.
- Place the appliance in its final position at the place of installation.
  Extend the adjustable foot at the bottom hinge bracket until it rests on the floor and then make a further 90° turn.

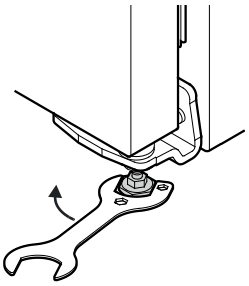

- If several appliances are installed next to each other, leave a gap of 50 mm between them.
  If this gap is too narrow, condensation forms between the side walls.

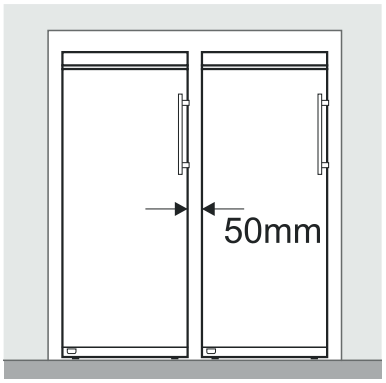

- To adapt the height of the appliance to the surrounding furniture a top unit can be added.
  A gap of at least 50 mm depth must be provided behind and along the entire width of this unit so as to ensure sufficient ventilation. The area of ventilation underneath the ceiling should be at least 300 cm^2.

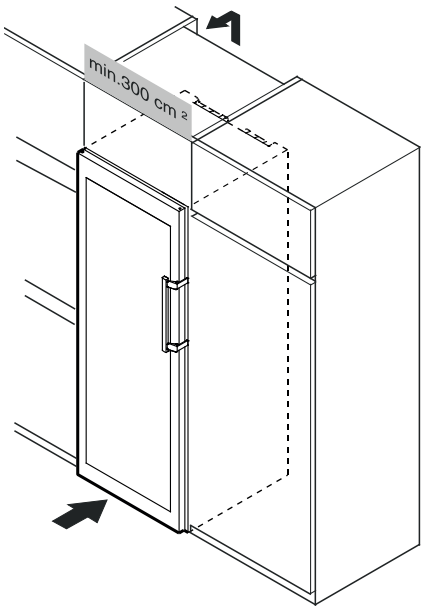

Dimensions

WKt 4552 **A** = 1650 mm
WKt 5552 **A** = 1920 mm

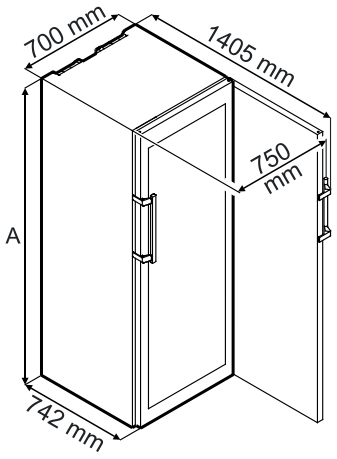

Electrical connection

Only operate the appliance with **alternating current (AC)**.

The permissible voltage and frequency are indicated on the type plate. The position of the type plate is shown in the section entitled **Description of the appliance**.

The socket must be properly earthed and protected by a fuse.

The tripping current of the fuse must be between 10 A and 16 A.

The socket must not be situated behind the appliance and must be easily accessible.

Do not connect the appliance using an extension cable or extension socket.

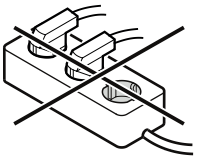

Do not use stand-alone inverters (conversion of direct current to alternating current/three-phase current) or energy-saving plugs. Risk of damage to the electronic control system!

Operating and control elements

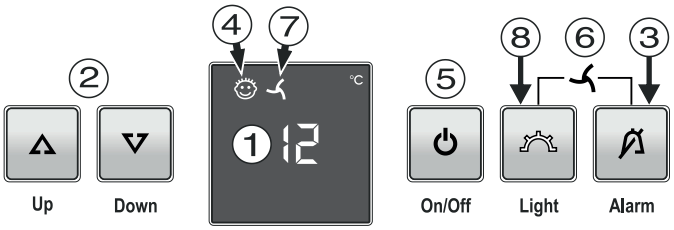

① Temperature display
② Temperature setting buttons
③ Audible warning On/Off button
④ Child lock activated symbol
⑤ On/Off button
⑥ Fan On/Off button combination
⑦ Fan On symbol
⑧ Interior light On/Off button

Switching the appliance on and off

Switching the appliance on

Press the **On/Off** button until the temperature display lights up.



Switching the appliance off

Keep the **On/Off** button pressed for approx. 3 seconds so that the temperature display goes out.

Setting the temperature

Increasing the temperature

Press the **Up** button.

Reducing the temperature

Press the **Down** button.

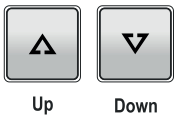

- When pressing one of the buttons for the first time, the display will start to flash.
- Pressing this button again enables you to change the temperature setting.
- The electronic controls will switch over automatically about 5 seconds after the last time you pressed the button, and the actual temperature will be displayed.

Storing wine

If you are storing wine for long periods of time, it should be stored at a temperature of between 10°C and 14°C.

This is the temperature wine cellars are kept at, and it is just right to allow wine to mature properly.

The following drinking temperatures are recommended for the various types of wine.

Red wines: **+14°C to +18°C**
Rosé wines: **+10°C to +12°C**
White wines: **+8°C to +12°C**
Sparkling wines, Prosecco: **+7°C to +9°C**
Champagne: **+5°C to +7°C**

Door open alarm

If the door is left open for more than 60 seconds, the audible warning signal will sound.

If the door must be opened for a lengthy period to place items into the appliance, cancel the audible warning signal by pressing the **Alarm** button.



The alarm switches back to standby when the door is shut.

Temperature alarm

If the temperatures in the interior are out of the permitted range, the audible warning signal will sound and the temperature display will flash.

- Cancel the audible warning signal by pressing the **Alarm** button.

The temperature display will stop flashing as soon as the temperature in the interior has reached the set value.

Temperature alarm after a fault in the appliance

If the appliance develops a fault, the temperature in the interior may rise too high or fall too low. The audible warning signal will sound and the temperature display will flash.

If the temperature displayed is too high (warm), first check whether the door is closed correctly.

If the temperature display continues to show a value that is too high or too low after one hour, contact the customer service department.

- Cancel the audible warning signal by pressing the **Alarm** button.

If **F1** appears in the display, the appliance has suffered a fault. In this case, contact the customer service department.

Fan switch

The interior fan ensures a constant and even interior temperature and a suitable climate for wine storage.

The humidity in the appliance can be increased even further by activating the **fan switch**. This has a particularly positive effect for long-term storage.

The increased level of humidity prevents the corks from drying out.

Switching on

Hold down the **Alarm** button and then press the **Light** button.

The LED will come on.

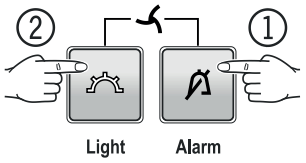

Switching off

Hold down the **Alarm** button and then press the **Light** button.

The LED goes dark.



Note

If the appliance is operated in a low ambient temperature, the fan may also run when the fan function is deactivated.

Additional functions

In set-up mode you can set the child lock and adjust the brightness of the display. The child lock is designed to protect the appliance from being switched off accidentally.

Activating the child lock

Press 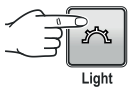

for 5 seconds. Display = 

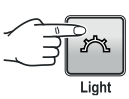

Display = 

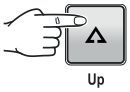

Display = 



Display = 



Display = 

Deactivating the child lock

Press 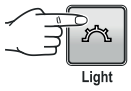

for 5 seconds. Display = 

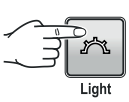

Display = 

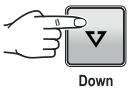

Display = 

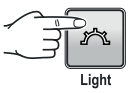

Display = 

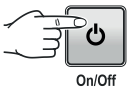

Display = 

Additional functions

Adjusting the display brightness

Press 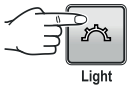

for 5 seconds. Display = 

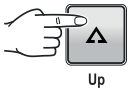

Display = 

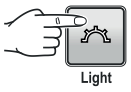

Display = 

Use buttons  and  to select the desired setting.

h1 = minimum brightness
h5 = maximum brightness

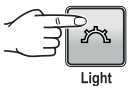

Display = 



Display = 

The adjusted brightness will be activated after one minute.

Note
If a button is pressed, the display lights up for one minute at maximum brightness.

When commissioning the appliance, the adjusted brightness will only be active once the set interior temperature of the appliance has been reached.

Demo mode

Demo mode can be activated for presenting the appliance at exhibitions or in salesrooms as though in normal operating mode.

When in this mode, the cooling circuit is switched off!

If this mode is activated by accident, it can be deactivated as detailed below.

Press 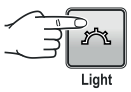

+ 

for 5 seconds.

Display = 

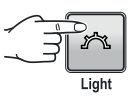

Display = 

The refrigeration unit switches on.
The temperature display flashes.

The appliance is now in normal operating mode.

Interior light

The interior of the appliance is lit by an LED light strip at the top of the interior container.

The interior light will always switch on when the appliance door is opened.

Press the **Light** button if you want the interior light to be on even when the door is closed.



Light

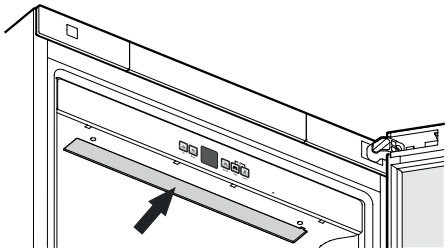

The light intensity of the LED light corresponds to laser class 1/1M.

⚠ Important

The light cover may only be removed by customer service staff. If the cover is removed, do not look directly at the light through optical lenses from close distance. This can damage your eyes.

Safety lock

The lock in the appliance door is equipped with a safety mechanism.

Locking the appliance:

- Insert the key as shown by arrow **1**.
- Turn the key 180°.

To unlock the appliance, the same procedure must be repeated in the same order.

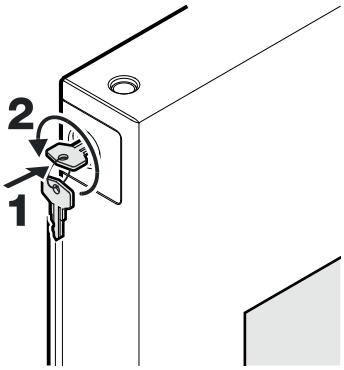

Air exchange with activated charcoal filter

The way in which wines continue to mature depends on the ambient conditions. The quality of the air is therefore decisive for preserving the wine.

We recommend that you replace the filter once a year. Filters can be obtained from your dealer.

Changing the filter:
Take the filter by the handle. Turn it 90° to the left or right and remove.

Inserting the filter:
Insert with the handle in a vertical position. Turn it 90° to the left or right until it clicks into place.

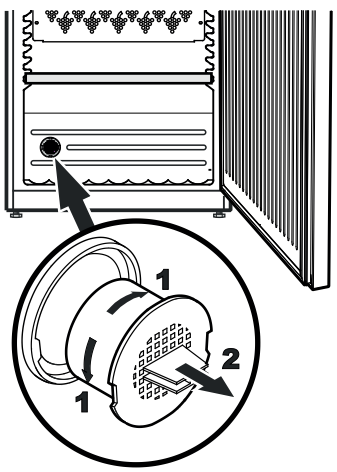

Storage diagrams for 750 ml Bordeaux bottles

WKt 4552

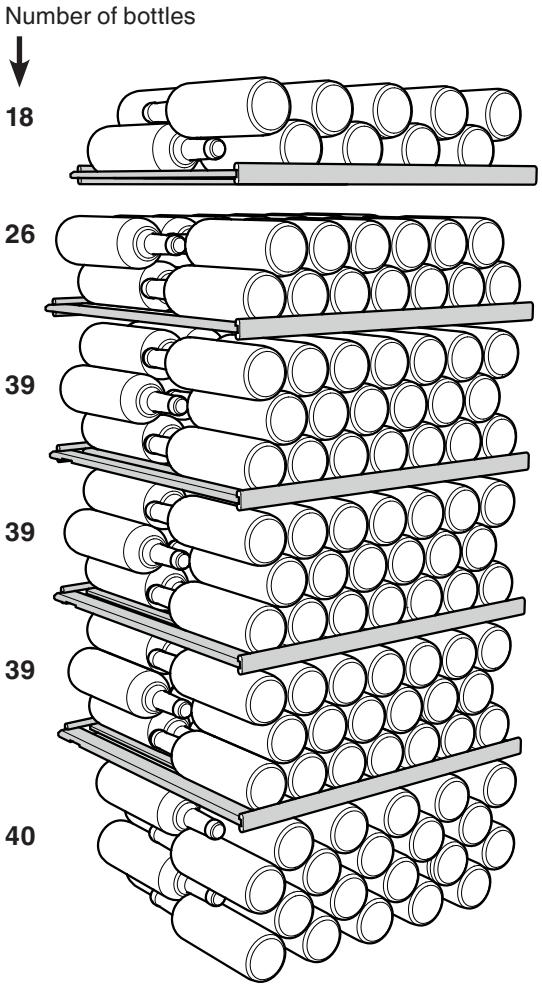

Total 201 bottles

The storage capacity stated is only possible with the grid shelves in this configuration.

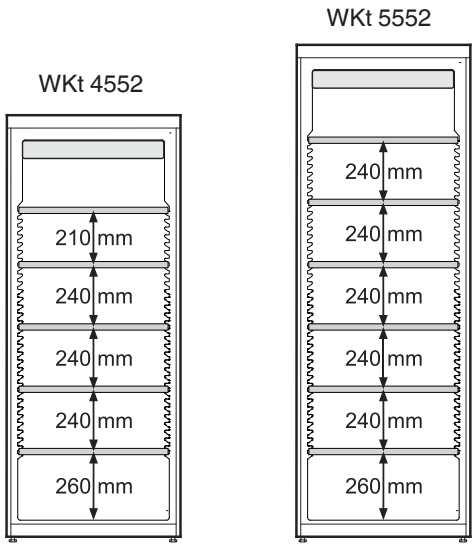

⚠ Important

The maximum load per grid shelf is 60 kg.

WKt 5552

Number of bottles

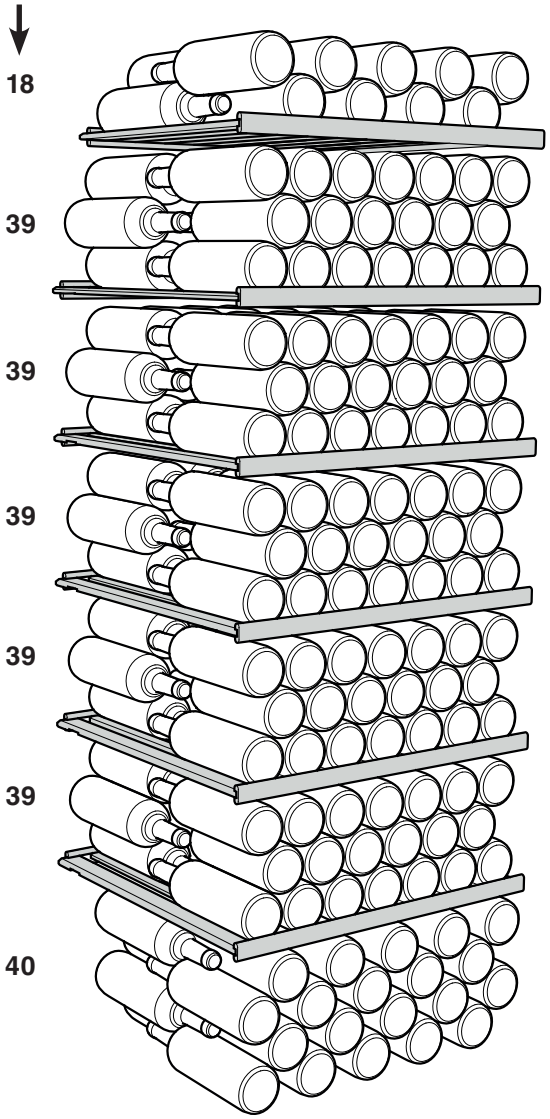

Total 253 bottles

Labels

The appliance is supplied with a label holder with labels for each shelf.

Use these to label the type of wine stored on each shelf.

Additional labels can be obtained from your dealer.

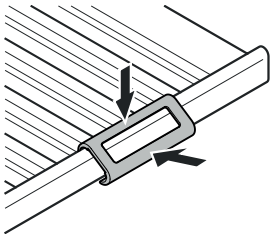

Click the label holder into place and slide the label in from the side.

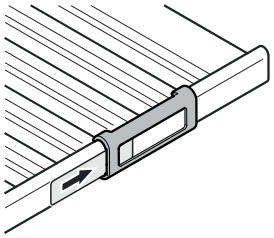

Cleaning

Before cleaning always switch off the appliance. Pull out the mains plug or remove/unscrew the fuse.

- Clean the inside and outer walls with lukewarm water and a little detergent. Do not use abrasive or acid cleaners or chemical solvents.
- Use a glass cleaner to clean the glass surfaces and a commercially available stainless-steel cleaning agent for the stainless-steel surfaces.

Do not use steam cleaners because of the risk of injury and damage.

- Ensure that no cleaning water penetrates into the electrical components or ventilation grille.
- Do not damage or remove the type plate on the inside of the appliance. It is very important for servicing purposes.

Malfunctions

- **F1 appears in the display.**

– The appliance has suffered a fault. Contact the customer service department.

You may be able to rectify the following faults by checking the possible causes yourself.

- **Appliance does not function:**

– Is the appliance switched on?
– Is the plug correctly fitted in the mains socket?
– Is the fuse intact?

- **When inserting the mains plug, the refrigeration unit does not switch on, but a value is shown in the temperature display.**

– Demo mode is activated. Deactivate demo mode as described in the section entitled **Additional functions - Demo mode**.

- **Loud running noise:**

– Is the appliance set up firmly on the floor?
– Does the appliance cause nearby items of furniture or objects to vibrate? Please note that noises caused by the refrigerant circuit cannot be avoided.

- **The temperature is not low enough:**

– Is the temperature setting correct (see "Setting the temperature")?
– Does the separately installed thermometer show the correct reading?
– Is the ventilation system working properly?
– Is the appliance set up too close to a heat source?

If none of the above causes apply and you cannot rectify the fault yourself, contact the nearest customer service department stating the type designation ①, service number ② and appliance number ③ as indicated on the type plate.

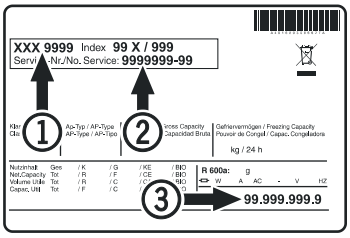

The position of the type plate is shown in the section entitled **Description of the appliance**.

Changing over door hinges

Door hinges should only be changed by a trained expert.

Changing the door hinges must be done by two people.

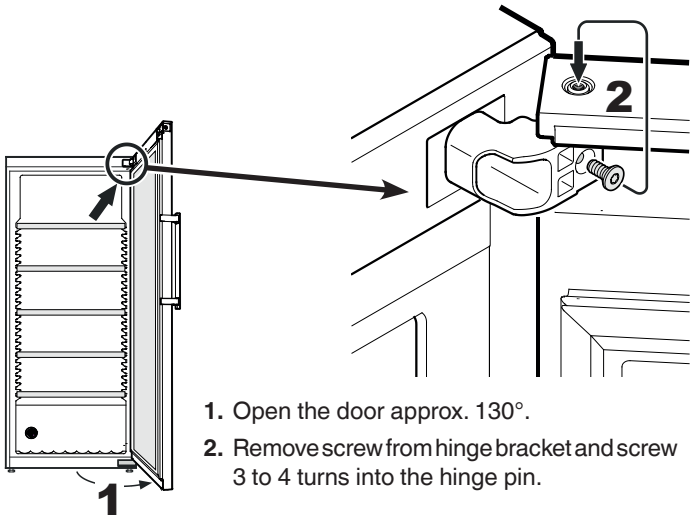

1. Open the door approx. 130°.

2. Remove screw from hinge bracket and screw 3 to 4 turns into the hinge pin.

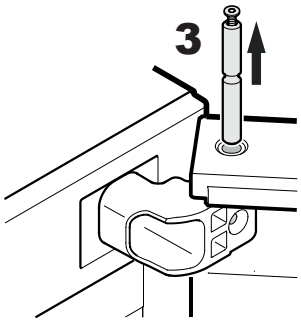

Important
The door must now be held secure by somebody.

3. Pull out hinge pin.

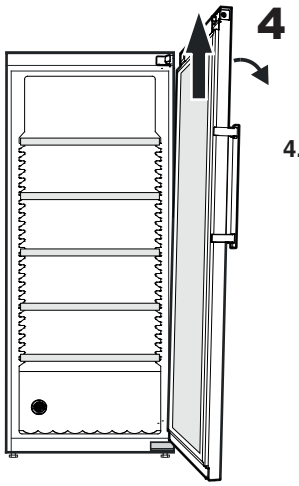

4. Tilt door slightly to the side and remove by lifting upwards.

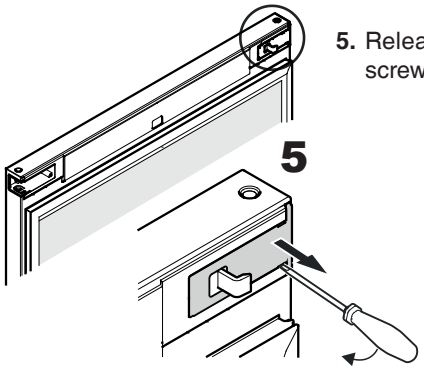

5. Release cover with a small screwdriver and remove.

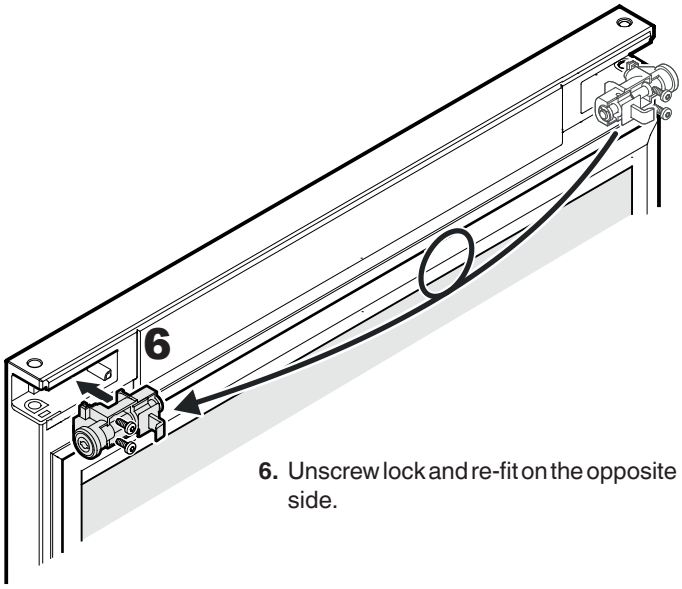

6. Unscrew lock and re-fit on the opposite side.

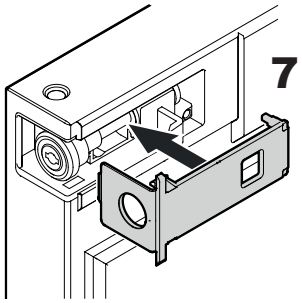

7. Click cover into place.

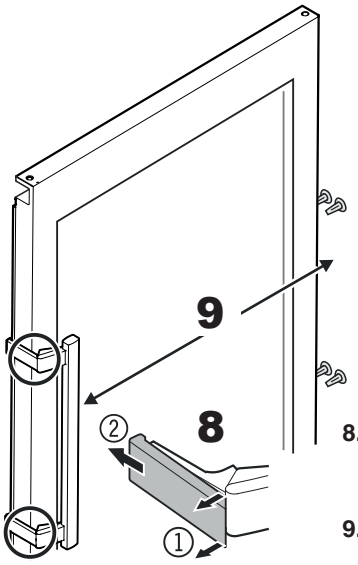

8. Release pressure plates at the front ① and pull them backwards to remove ②.

9. Transfer door handle and plugs to the opposite side.

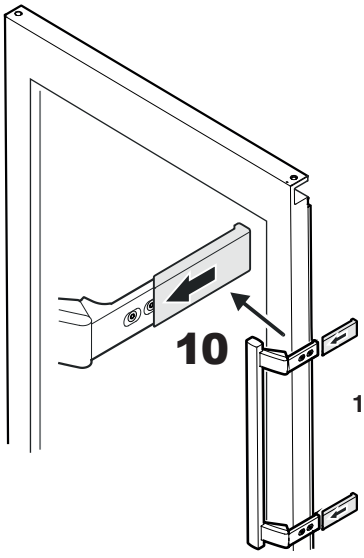

10. Push on pressure plates until they engage.

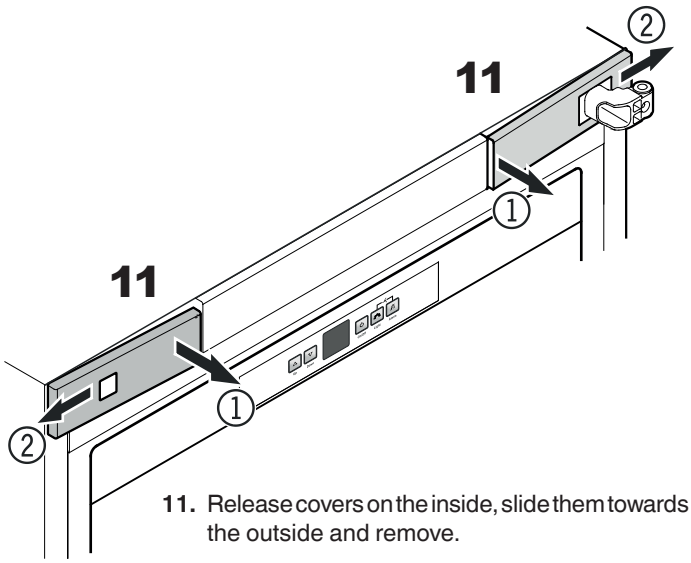

11. Release covers on the inside, slide them towards the outside and remove.

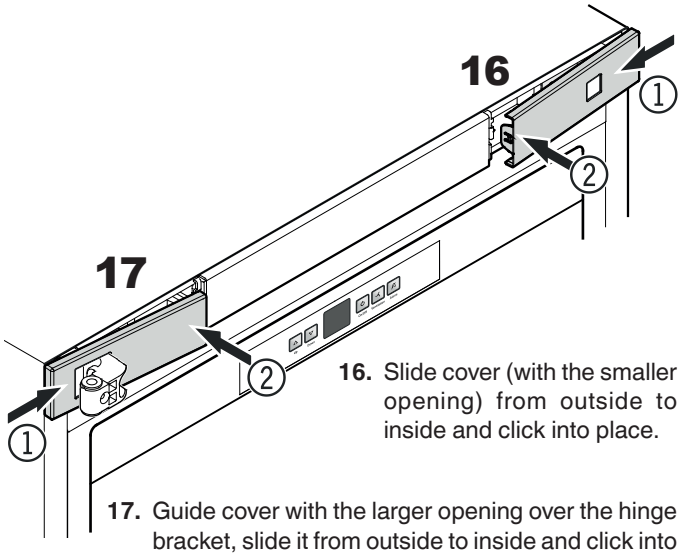

16. Slide cover (with the smaller opening) from outside to inside and click into place.

17. Guide cover with the larger opening over the hinge bracket, slide it from outside to inside and click into place.

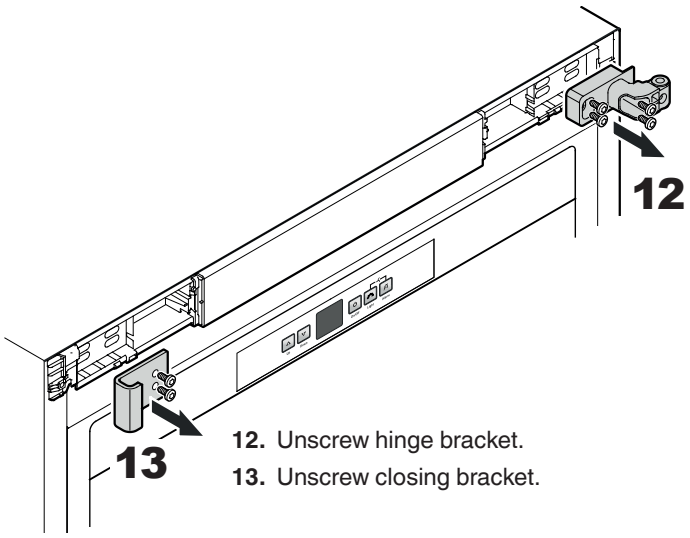

12. Unscrew hinge bracket.

13. Unscrew closing bracket.

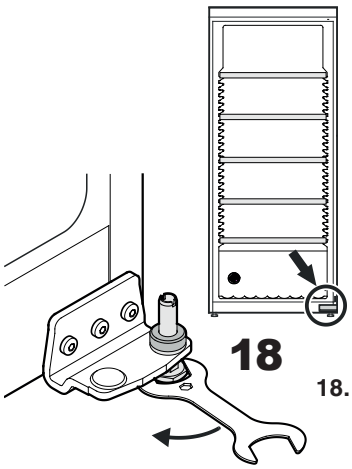

18. Undo adjustable foot with the spanner provided.

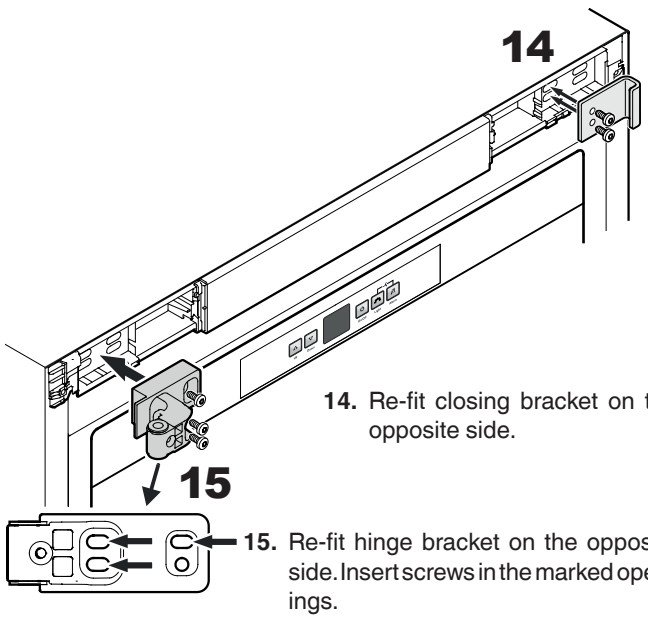

14. Re-fit closing bracket on the opposite side.

15. Re-fit hinge bracket on the opposite side. Insert screws in the marked openings.

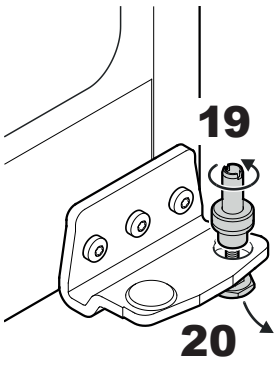

19. Pull hinge pin upwards and unscrew it from the adjustable foot.

20. Pull adjustable foot downwards to remove.

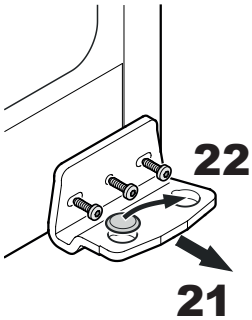

21. Unscrew hinge bracket.

22. Transfer cover to the opposite side.

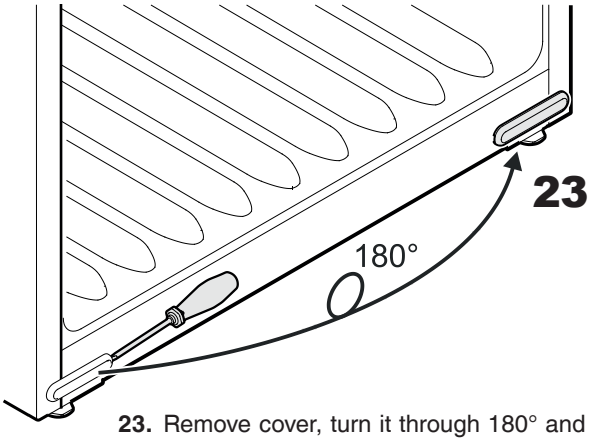

23. Remove cover, turn it through 180° and re-fit on the opposite side.

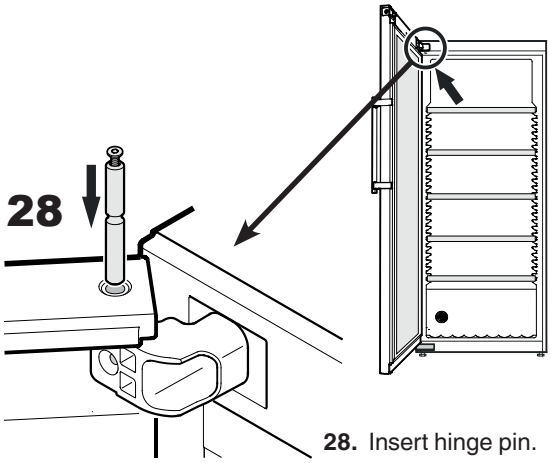

28. Insert hinge pin.



24. Screw hinge bracket into place.

Front view of top hinge bracket

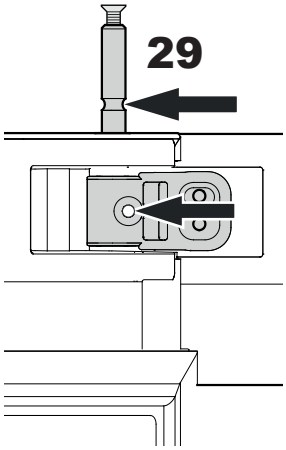

29. Push in hinge pin until groove in the pin lines up with bore hole in the hinge bracket.

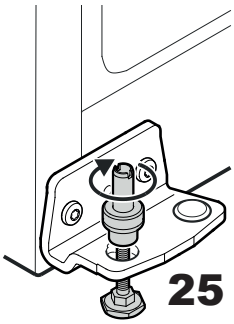

25. Fit adjustable foot from underneath and attach hinge pin to it.

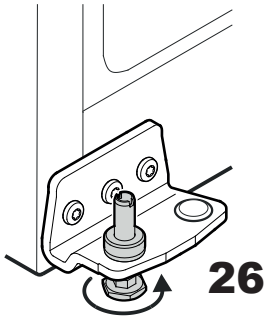

26. Insert pin fully into hinge bracket and tighten adjustable foot by hand.

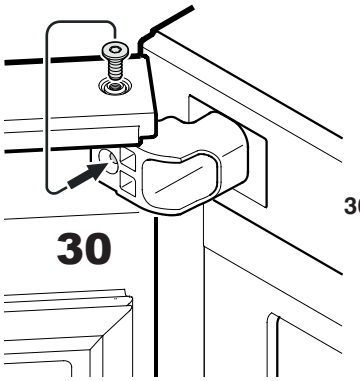

30. Undo screw in hinge pin and screw into bore hole in hinge bracket.

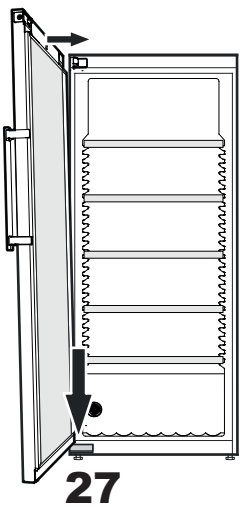

27. Place door on pin and move the top of it to the hinge bracket.

Important
The door must now be held secure by somebody.

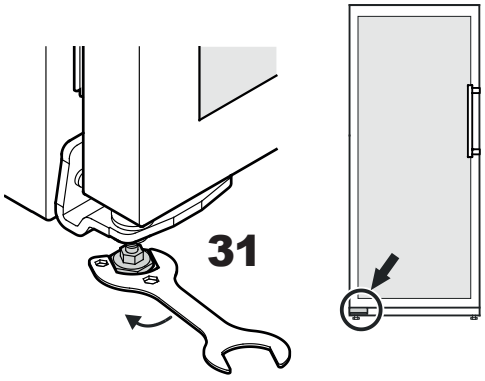

31. Place the appliance in its final position at the place of installation.

Extend the adjustable foot at the bottom hinge bracket until it rests on the floor and then make a further 90° turn.

Adjusting the lateral tilt of the door

If the door is at an angle, adjust the angle.

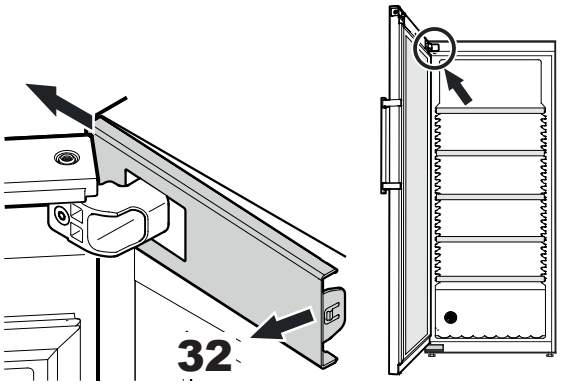

32. Release cover on the inside and slide to the outside.

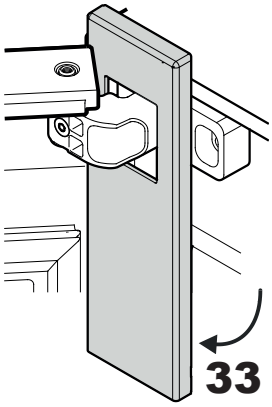

33. Turn cover downwards.

Front view of top hinge bracket

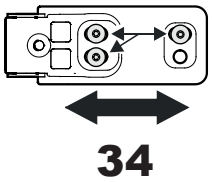

34. Undo screws and slide hinge bracket to the right or left.

Tighten screws.

Re-fit cover following the instructions above in reverse order.

Close door and check that it is aligned with the side walls of the appliance.

Shutting your appliance down

If your appliance is to be shut down for any length of time, switch it off and disconnect the plug or switch off or unscrew the fuse.

Clean the appliance and leave the door open in order to prevent unpleasant smells.

The appliance complies with the relevant safety regulations and EU Directives 2014/30/EU and 2014/35/EU.

Liebherr Hausgeräte Lienz GmbH
Dr.-Hans-Liebherr-Strasse 1
A-9900 Lienz
Österreich
www.liebherr.com