Eaton 9PX Lithium-Ion

Advanced Users Guide

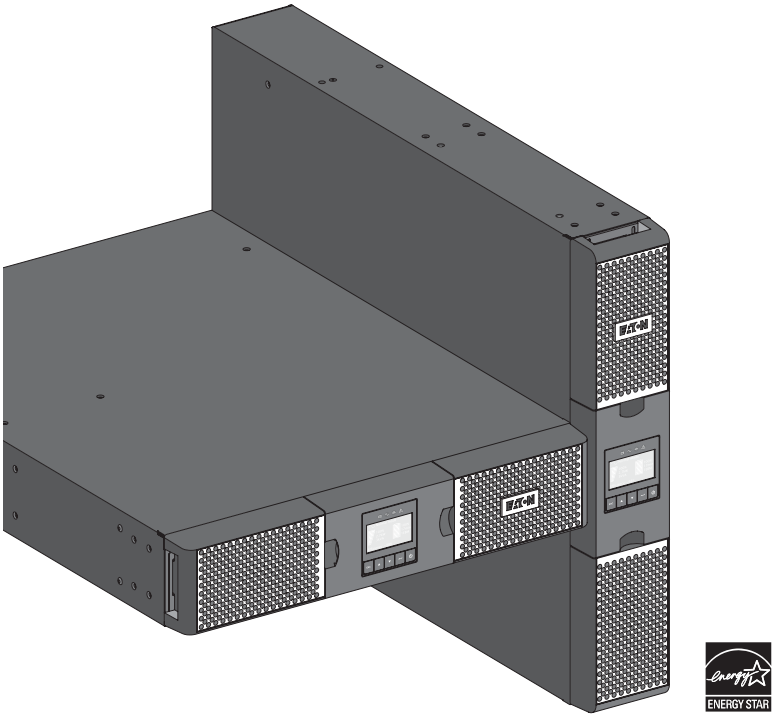

9PX1500RT-L
9PX2000RT-L
9PX3000RT-L
9PX1500GRT-L
9PX2200GRT-L
9PX3000GRT-L
9PXEBM48RT-L
9PXEBM72RT-L

Powering Business Worldwide

p/n: P-164001006
Revision 08

Safety Instructions

SAVE THESE INSTRUCTIONS.

This manual contains important instructions **that should be followed during installation and maintenance of the UPS and batteries.**

The 9PX models that are covered in this manual are intended for installation n an environment within 0 to 40°C, free of conductive contaminant.

This equipment has been tested and found to comply with the limits for a Class B digital device, pursuant to IEC62040-2 & FCC standards. These limits are designed to provide reasonable protection against harmful interference when the equipment is operated in a commercial environment. This equipment generates, uses, and can radiate radio frequency energy and, if not installed and used in accordance with the instruction manual, may cause harmful interference to radio communications. Operation of this equipment in a residential area is likely to cause harmful interference in which case the user will be required to correct the interference at his own expense.

Special Symbols

The following are examples of symbols used on the product to alert you to important information:

RISK OF ELECTRIC SHOCK - Observe the warning associated with the risk of electric shock symbol.

CAUTION: REFER TO OPERATOR'S MANUAL - Refer to your operator's manual for additional information, such as important operating and maintenance instructions.

This symbol indicates that you should not discard the UPS or the UPS batteries in the trash. This product contains sealed, Lithium-Ion batteries and must be disposed of properly. For more information, contact your local recycling/reuse or hazardous waste center.

This symbol indicates that you should not discard waste electrical or electronic equipment (WEEE) in the trash. For proper disposal, contact your local recycling/reuse or hazardous waste center.

©Copyright 2025 Eaton, Raleigh, NC, USA. All rights reserved. No part of this document may be reproduced in any way without the express written approval of Eaton.

Safety of Persons

- The system has its own power source (the battery). Consequently, the power outlets may be energized ven if the systems is disconnected from the AC power source. Dangerous voltage levels are resent within the system. It should be opened exclusively by qualified service personnel.
- The system must be properly grounded at all times.
- The battery supplied with the system contains small amounts of toxic materials. To avoid accidents, the directives listed below must be observed:
  - Servicing of batteries should be performed or supervised by personnel knowledgeable about batteries and the required precautions.
  - When replacing batteries, replace with the same type and number of batteries or battery packs.
  - Do not dispose of batteries in a fire. The batteries may explode.
  - Batteries constitute a danger (electrical shock, burns). The short-circuit current may be very high.
- Precautions must be taken for all handling:
  - Wear rubber gloves and boots.
  - Do not lay tools or metal parts on top of batteries.
  - Disconnect charging source prior to connecting or disconnecting battery terminals.
  - Determine if battery is inadvertently grounded. If inadvertently grounded, remove source from ground. Contact with any part of a grounded battery can result in electrical shock. The likelihood of such shock can be reduced if such grounds are removed during installation and maintenance (applicable to equipment and remote battery supplies not having a grounded supply circuit).

Product Safety

- To connect the UPS, instructions and operation described in the manual must be followed in the indicated order.
- CAUTION - To reduce the risk of fire, the unit connects only to a circuit provided with 20 or 30 amperes maximum branch circuit overcurrent protection in accordance with the National Electric Code, ANSI/NFPA 70 (US installations only).
- Check that the indications on the rating plate correspond to your AC powered system and to the actual electrical consumption of all the equipment to be connected to the system.
- For PLUGGABLE EQUIPMENT, the socket-outlet shall be installed near the equipment and shall be easily accessible
- Never install the system near liquids or in an excessively damp environment.
- Never let a foreign body penetrate inside the system.
- Never block the ventilation grates of the system.
- Never expose the system to direct sunlight or source of heat.
- If the system must be stored prior to installation, storage must be in a dry place.
- The admissible storage temperature range is -25ºC to +55ºC without batteries, 0°C to 40°C with batteries.
- The system is not for use in a computer room AS DEFINED IN the standard for the Protection of Information Technology Equipment, ANSI/NFPA 75 (US installations only).

Special Precautions

- The unit is heavy: wear safety shoes and use vacuum lifter preferentially for handling operations.
- All handling operations will require at least two people (unpacking, lifting, installation in rack system).
- Before and after the installation, if the UPS remains de-energized for a long period, the UPS must be energized for a period of 24 hours, at least once every 6 months (for a normal storage temperature less than 25°C). This charges the battery, thus avoiding possible irreversible damage.
- During the replacement of the Battery Module, it is imperative to use the same type and number of element as the original Battery Module provided with the UPS to maintain an identical level of performance and safety. If there are any questions, don't hesitate to contact your local EATON representative.
- All repairs and service should be performed by AUTHORIZED SERVICE PERSONNEL ONLY. There are NO USER SERVICEABLE PARTS inside the UPS.
- For potential safety issue on defective UPS : DISCONNECT INTERNAL BATTERY for storage and transportation.

Table of Contents

1 Introduction 1
1.1 Overview 1
1.2 Environmental Protection 1

2 Presentation 3
2.1 Standard Installations 3
2.2 Rear Panels 4
2.3 Accessories 5
2.4 Control Panel 5
2.5 LCD Description 7
2.6 Display Functions 8
2.7 User Settings 9

3 Installation 14
3.1 Inspecting the Equipment 14
3.2 Checking the Accessory Kit 14
3.3 Connecting the Internal Battery 16
3.4 Tower Installation 17
3.5 Rack Installation 18
3.6 Vertical Installation 19
3.7 Connecting the EBM(s) 20
3.8 Detecting other Accessories 21
3.9 UPS Connection without Hotswap MBP Module 22
3.10 Connection with a Hotswap MBP Module (Optional Accessory) 23

4 Communication 25
4.1 Communication Ports 25
4.2 UPS Remote Control Functions 26

5 Operation 30
5.1 Start-up and Normal Operation 30
5.2 Starting the UPS on Battery 30
5.3 UPS Shutdown 30
5.4 Operating Modes 30
5.5 Return of AC Power 31
5.6 Setting High Efficiency Mode 31
5.7 Configuring Bypass Settings 32
5.8 Configuring Battery Settings 32
5.9 Retrieving the Event Log 33
5.10 Retrieving the Fault Log 33

6 UPS Maintenance 34

6.1 Storing the Equipment 34
6.2 Replacing Batteries 34
6.3 Battery Settings Reset 36
6.4 Replacing the UPS Equipped with a HotSwap MBP 38
6.5 Recycling The Used Equipment 38

7 Troubleshooting 39
7.1 Typical Alarms and Faults 39
7.2 Silencing the Alarm 40
7.3 Service and Support 40
7.4 CE Compliance Contact 41

8 Specifications 42
8.1 Model Specifications 42

Chapter 1 Introduction

1.1 Overview

1.2 Environmental Protection

EATON has implemented an environmental-protection policy.

Products are developed according to an eco-design approach.

Substances

This product does not contain CFCs, HCFCs, or asbestos.

Packing

To improve waste treatment and facilitate recycling, separate the various packing components.

- The cardboard we use comprises over 50% of recycled cardboard.
- Sacks and bags are made of polyethylene.
- Packing materials are recyclable and bear the appropriate identification symbol 01 PET

Table 1. Packing Material Symbols

Materials	Abbreviations	Number in the symbols
Polyethylene terephthalat	PET	01
High-density polyethylene	HDPE	02
Polyvinyl chloride	PVC	03
Low-density polyethylene	LDPE	04
Polypropylene	PP	05
Polystyrene	PS	06

Follow all local regulations for the disposal of packing materials.

End of Life

Eaton will process products at the end of their service life in compliance with local regulations. Eaton works with companies in charge of collecting and eliminating our products at the end of their service life.

Product

The product is made up of recyclable materials.

Dismantling and destruction must take place in compliance with all local regulations concerning waste. At the end of its service life, the product must be transported to a processing center for electrical and electronic waste.

Battery

The product contains lithium-ion (LFP) batteries that must be processed according to applicable local regulations concerning batteries.

The battery may be removed to comply with regulations and in view of correct disposal.

The Eaton® 9PX uninterruptible power system (UPS) protects your sensitive electronic equipment from the most common power problems, including power failures, power sags, power surges, brownouts, line noise, high voltage spikes, frequency variations, switching transients, and harmonic distortion.

Power outages can occur when you least expect it and power quality can be erratic. These power problems have the potential to corrupt critical data, destroy unsaved work sessions, and damage hardware causing hours of lost productivity and expensive repairs.

With the Eaton 9PX, you can safely eliminate the effects of power disturbances and guard the integrity of your equipment. Providing outstanding performance and reliability, the Eaton 9PX's unique benefits include:

- True online double-conversion technology with high power density, utility frequency independence, and generator compatibility.
- Constant mode battery charger with a integrated battery management system (BMS) for temperature regulation and life cycle monitoring.
- Selectable High Efficiency mode of operation.
- Standard communication options: one RS-232 communication port, one USB communication port, and relay output contacts.
- Optional connectivity cards with enhanced communication capabilities.
- Extended runtime with up to four Extended Battery Modules (EBMs) per UPS.
- Remote On/Off control through Remote On/Off (ROO) and Remote Power Off (RPO) ports.
- Backed by worldwide agency approvals.

Chapter 2 Presentation

2.1 Standard Installations

Figure 1. Tower Installation

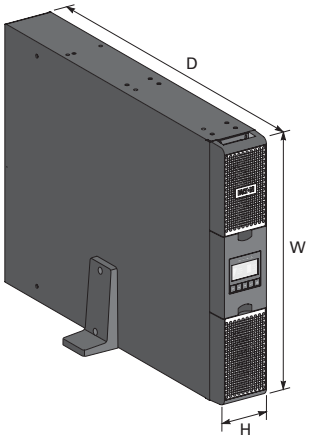

Figure 2. Rack Installation

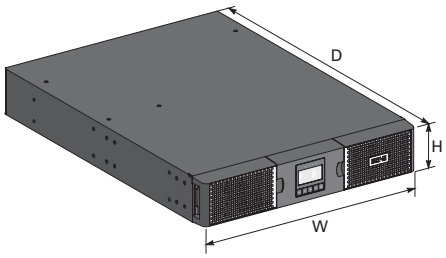

Table 2. Weights and Dimensions

Model	Dimensions D x W x H(inch/mm)	Weight (lb / kg)
9PX1500RT-L	17.7 x 17.3 x 3.4 / 450 x 440 x 86.5	35.5 / 16.2
9PX2000RT-L	23.8 x 17.3 x 3.4 / 605 x 440 x 86.5	50.6 / 23.0
9PX3000RT-L	23.8 x 17.3 x 3.4 / 605 x 440 x 86.5	52.7 / 24.0
9PX1500GRT-L	17.7 x 17.3 x 3.4 / 450 x 440 x 86.5	34.8 / 15.8
9PX2200GRT-L	23.8 x 17.3 x 3.4 / 605 x 440 x 86.5	48.6 / 22.1
9PX3000GRT-L	23.8 x 17.3 x 3.4 / 605 x 440 x 86.5	50.2 / 22.8
9PXEBM48RT-L	17.6 x 17.2 x 1.7 / 448 x 438 x 42.9	36.5 / 16.6
9PXEBM72RT-L	23.7 x 17.2 x 1.7 / 603 x 438 x 42.9	46.6 / 21.2

2.2 Rear Panels

9PX 1500RT-L

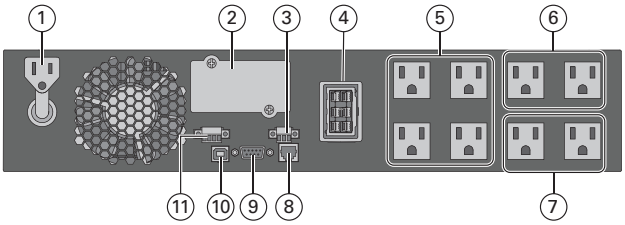

9PX 2000RT-L

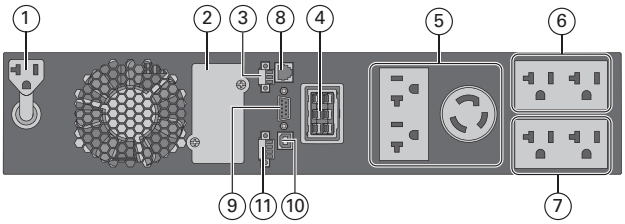

9PX 3000RT-L (*)

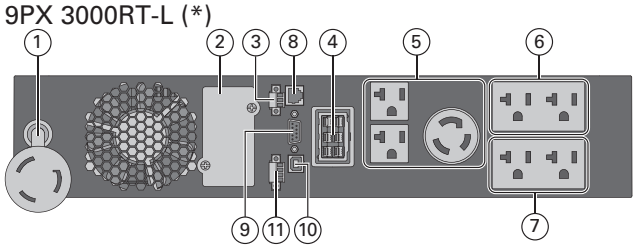

9PX 1500GRT-L

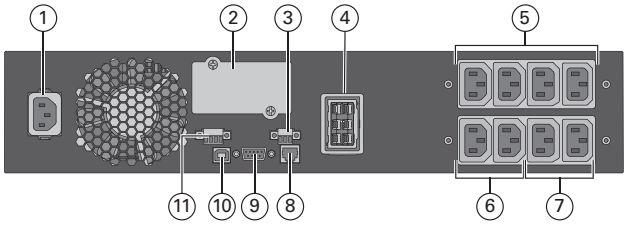

9PX 2000GRT-L & 9PX 3000GRT-L

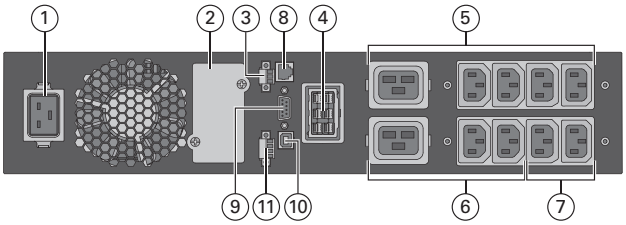

① Socket for connection to AC power source
② Slot for optional communication card
③ Relay output contact
④ Connector for additional battery module
⑤ Primary group: outlets for connection of critical equipment
⑥ Group 1: programmable outlets for connection of equipment
⑦ Group 2: programmable outlets for connection of equipment
⑧ Connector for automatic recognition of an additional battery module
⑨ RS232 communication port
⑩ USB communication port
⑪ Connector for ROO (Remote On/Off) control and RPO (Remote Power Off)

(*) Primary and Grouped outlets (⑤, ⑥, ⑦) are protected by 20A circuit breakers.

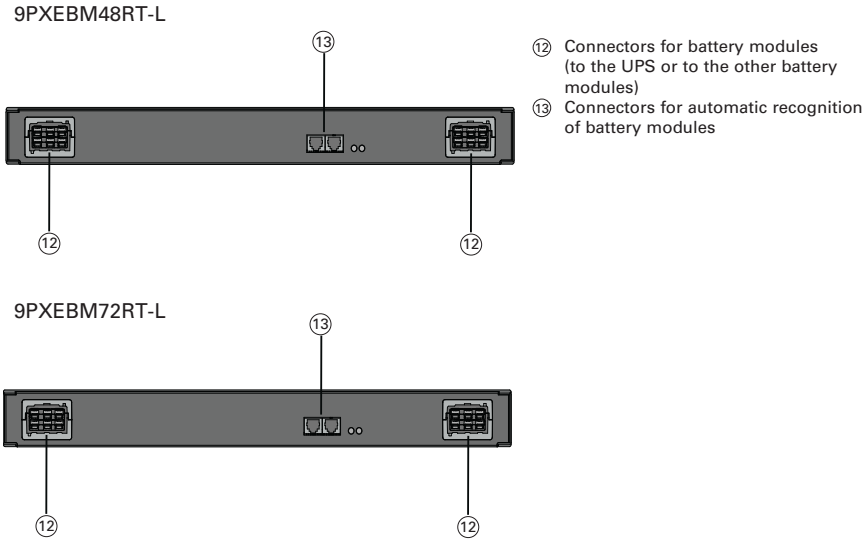

2.3 Accessories

Table 3. UPS Accessories

Part number	Description
9PXEBM48RT-L 9PXEBM72RT-L	Extended Battery Module
9RK	Rack Kit 9PX
Network-M2 / Network-M3	Network Card
INDGW-M2	Industrial Gateway Card (Modbus TCP / RTU)
Relay-MS	Relay Card

2.4 Control Panel

The UPS has a five-button graphical LCD. It provides useful information about the UPS itself, load status, events, measurements and settings.

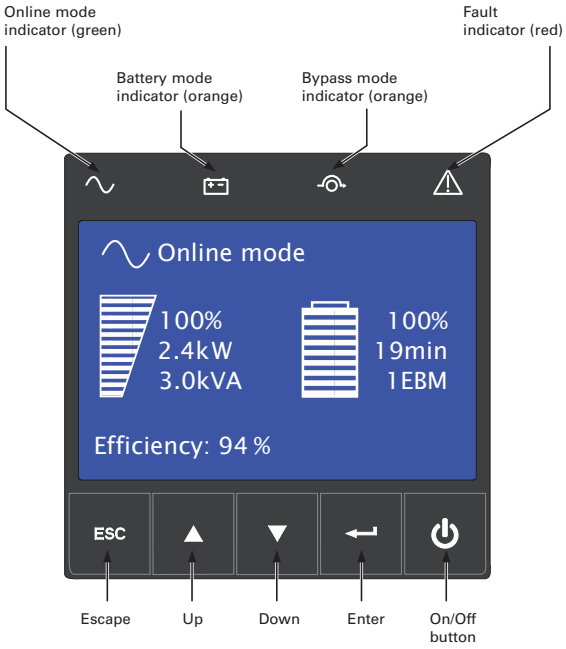

Indicator	Status	Description
Green	On	The UPS is operating normally on Online or on High Efficiency mode.
Orange	On	The UPS is on Battery mode.
Orange	On	The UPS is on Bypass mode.
Red	On	The UPS has an active alarm or fault.

2.5 LCD Description

Figure 3. LCD Description

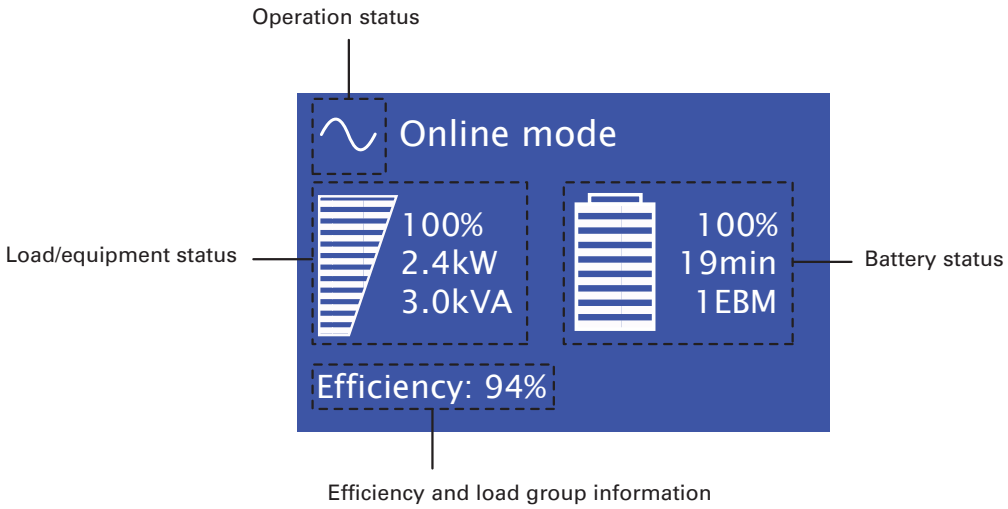

The following table describes the status information provided by the UPS

Note: If other indicator appears, see the troubleshooting for additional information.

Table 4. LCD Operating Status

Operation status	Cause	Description
Standby mode	The UPS is Off, waiting for startup command from user.	Equipment is not powered until ⏻ button is pressed.
Online mode	The UPS is operating normally.	The UPS is powering and protecting the equipment.
Battery mode	A utility failure has occured and the UPS is on Battery mode.	The UPS is powering the equipment with the battery power. Prepare your equipment for shutdown.
End of backup time	The UPS is on Battery mode and the battery is running low.	Low Battery Warning settings: [Capacity] [0%] ... [100%] [Runtime] [0mn] ... [60mn] The alarm triggers when the set percentage of battery capacity or remaining back-up time is reached.

Table 4. LCD Operating Status (Continued)

Operation status	Cause	Description
High Efficiency mode	The UPS is operating on High Efficiency mode.	The UPS is powering and protecting the equipment
Bypass mode	An overload or a fault has occurred, or a command has been received, and the UPS is in Bypass mode.	Equipment is powered but not protected by the UPS.

2.6 Display Functions

Press the (↵) button to activate the menu options. use the two middle buttons (▲and ▼) to scroll through the menu structure. Press the (↵) button to select an option. Press the ESC button to cancel or return to the previous menu.

Table 5. Display Functions

Main menu	Submenu	Display information or Menu function
Measurements		[Load] W VA A pf / [Input/Output] V Hz / [Efficiency] % / [Battery] % min V n° EBM / [Battery remaining life] months / [Average power usage] Wh / [Cumulated power] Wh / BMS Information
Control	Go to Bypass	Transfers the UPS on Bypass mode
	Load segments On/Off	Commands the load segments
	Start battery test	Starts a manual battery test
	Connectivity test	Tests dry contact relay outputs and relay card contacts. Simulates line failure and battery low
	Function reset	Clears active fault, power usage, battery remaining life, reset NMC, Restore factory settings.
Settings	Local settings	Sets product general parameters
	In/out settings	Sets Input and Output parameters
	On/Off settings	Sets On/Off conditions
	Battery settings	Sets battery configuration
	Com settings	Sets communication parameters
Event Log	Event filter	Selects faults, alarms and/or events to display
	Event list	Displays the events stored
	Reset fault list	Clears events

Table 5. Display Functions (Continued)

Main menu	Submenu	Display information or Menu function
Fault log	Fault list	Displays the faults stored
	Reset fault list	Clears faults
Identification		[Product type/model] / [Part/Serial number] / [UPS/NMC firmware] / [Com card IPv4], [Com card IPv6], [Com card MAC]
Registration		Links to Eaton registration website

2.7 User Settings

The following table displays the options that can be changed by the user.

Table 6. User Settings

	Submenu	Available Settings	Default settings
Local Settings	Language	[English] [Français] [Deutsch] [Español] [Русский] [Português] [Italiano] [Simplified Chinese] [Japanese] Menus, status, notices and alarms, UPS fault, Event Log data and settings are in all supported languages.	[English] User selectable when UPS is powered for the first time.
	Date/ time	Format: [International] [US]	[US]
	LCD	Modify LCD screen brightness and contrast to be adapted to room light conditions.	
	Audible alarm	Mode: [Enabled] [Disabled on battery] [Always disabled] Enable or disable the buzzer if an alarm occurs. Level: [High] [Low]	[Enabled] [High]
	Protected access	[Enabled] [Disabled] Password is: 0577	[Disabled]
In/Out settings	Output voltage	100V] [110V] [120V] [125V] [200V] [208V] [220V] [230V] [240V]	[120V] [208V]
	Output frequency	Mode: [Normal] [Converter] [Marine] Frequency can be changed in Frequency [Converter] mode In [Marine] mode output frequency follows input frequency	[Normal]

Table 6. User Settings (Continued)

	Submenu	Available Settings	Default settings
	Output mode	Mode: [Industrial] [IT] [Custom] Overload: [Inv>Stop] [Inv>BP] [Inv>BP>Inv] Short-circuit: [Inv>Stop] [Inv>BP] [Inv>BP>Inv]	[IT] [Inv>BP>Inv] [Inv>Stop]
	Input volt hysteresis	Sets input voltage hysteresis from [1] to |5V]	[5V]
	High Efficiency mode	[Enabled] [Disabled] Power the output from Bypass for high efficiency	[Disabled]
	Bypass settings	[Volt low] [Volt high] [Qualify] [Hz synch] [Unsynch]	[96V] LV; [160V] HV; [138V] LV; [276V] HV; [In spec]; [5%]; [Half cycle]
	Load segments	[Auto start delay] [Auto shutdown delay]	UPS: [0s]; Group1: [3s]; Group2: [6s] UPS: [Disabled]; Group1: [Disabled]; Group2: [Disabled]
	Overload prealarm	[10%] … [102%] Load % when overload alarm occurs	[102%]
On/Off Settings	Start/Restart	[Cold start] [Auto restart] [Auto start] [Start on bypass]	[Cold start] [Auto restart] are Enabled [Auto start] [Start on bypass] are Disabled
	Forced reboot	[Enabled] [Disabled] [Timer] [10s] … [180s] When mains recover during a shutdown sequence: If set to Enabled, shutdown sequence will complete and wait 10 seconds prior to restart, If set to Disabled, shutdown sequence will not complete, UPS stays on.	[Enabled] [10s]
	Energy saving	[Enabled] [Disabled] [Timer] [1min] … [15min] [Level] [100W] … [1000W]	[Disabled] [5min] [100W]

Table 6. User Settings (Continued)

	Submenu	Available Settings	Default settings
		If Enabled, UPS will shut-down after defined duration. of back-up time, if load is less than set value.	
	Sleep mode	[Enabled] [Disabled] [Timer] [10min] … [120min] If Disabled, LCD and communication will turn OFF immediately after UPS is OFF. If Enabled, LCD and communication stays ON 1h30 min after UPS is OFF.	[Enabled] [90min]
	Site wiring fault	[Enabled] [Disabled] Prevents from starting the UPS in case of phase vs neutral wires swapping.	[Disabled]
	Power Off alert	[Enabled] [Disabled] If Enabled, activates a confirmation screen that requires user confirmation after pressing the power button, before the UPS shutdown occurs.	[Enabled]
Battery settings	Low battery warning	[Capacity] [0%] … [100%] [Runtime] [0min] … [60min] The alarm triggers when the set percentage of battery capacity or remaining back-up time is reached.	[0%] [3min]
	Restart bat. level	[0%] ... [100%] If set, automatic restart will occur only when percentage of battery charge is reached.	[0%]
	Battery life warning A message that the UPS battery may need replacing soon.	[Enabled] [Disabled] 96 month countdown from the time the device was powered on	[Disabled]
Com settings	Input signals	Sets Input signals parameters (function, delay, operation) through external contact connectors or RS232. ROO port:	

Table 6. User Settings (Continued)

	Submenu	Available Settings	Default settings
		- [Function]: [No] [ROO] [RPO] [Building alarm] [Forced bypass] [On generator] [Remote shutdown]	[No]
		- [Delay]: [0s] … [999s]	[0s]
		- [Active]: [Open] [Closed]	[Closed]
		RPO port:	
		- [Function]: [No] [ROO] [RPO] [Building alarm] [Forced bypass] [On generator] [Remote shutdown]	No
		- [Delay]: [0s] … [999s]	[0s]
		- [Active]: [Open] [Closed]	[Open]
		DB9-4 port:	No
		- [Function]: [No] [ROO] [RPO] [Building alarm] [Forced bypass] [On generator] [Remote shutdown]	
		- [Delay]: [0s] … [999s]	[0s]
		- [Active]: [High] [Low]	[High]
	Output signals	[Relay] [DB9-1] [DB9-7] [DB9-8] Sets events or fault that will actuate Output signal parameters through external contact connector or RS232	
		[Relay]: [On bat] [Low bat] [Bat fault] [Bypass] [UPS OK] [Load protected] [Load powered] [General alarm] [Ext. charger ON] [OVL pre-alarm]	[Relay] [Bypass]
		[DB9-1]: [On bat] [Low bat] [Bat fault] [Bypass] [UPS OK] [Load protected] [Load powered] [General alarm] [Ext. charger ON] [OVL pre-alarm]	[DB9-1] [Low bat]
		[DB9-7]: [On bat] [Low bat] [Bat fault] [Bypass] [UPS OK] [Load protected] [Load powered] [General alarm] [Ext. charger ON] [OVL pre-alarm]	[DB9-7] [UPS OK]
		[DB9-8]: [On bat] [Low bat] [Bat fault] [Bypass] [UPS OK] [Load protected] [Load	[DB9-8] [On bat]

Table 6. User Settings (Continued)

	Submenu	Available Settings	Default settings
Com settings (cont)		powered] [General alarm] [Ext. charger ON] [OVL pre-alarm]	
	Remote command	[Enabled] [Disabled] If Enabled, shutdown or restart commands from software are authorized.	[Enabled]
	Shutdown commands	[Send CMD] [Output OFF] [OFF delay] [restart] Sets events or fault that will actuate Output signal parameters through external contact connector or RS232 port [Send CMD]: [Yes] [No] [Output OFF]: [No] [UPS] [Group 1] [Group 2] [Group 1 + Group 2] [OFF delay]: [0s] …[999s] [Restart]: [Yes] [No]	 Send CMD: [No] Output OFF: [No] OFF delay: [0s] Restart: [Yes]
	On battery notice delay	Sets delay before noticing on battery information to software.	[0s]
	General alarm	[On battery] [Battery fault] [Overload pre-alarm] [Internal fault] [Ambient temp.] [Fan lock] [Bypass overload] [Current limit] [Short circuit] [Inverter overload] [Power overload] [Low battery] [On bypass] [UPS OK] [Load protected] [Load powered] [Ext. charger ON] Defines which event or fault generate a general alarm through Output signal screen.	[Internal fault]

Chapter 3 Installation

3.1 Inspecting the Equipment

If any equipment has been damaged during shipment, keep the shipping cartons and packing materials for the carrier or place of purchase and file a claim for shipping damage. If you discover damage after acceptance, file a claim for concealed damage.

To file a claim for shipping damage or concealed damage:

1. File with the carrier within 15 days of receipt of the equipment;
2. Send a copy of the damage claim within 15 days to your service representative.

IMPORTANT

Check the battery recharge date on the shipping carton label. If the date has passed and the batteries were never recharged, do not use the UPS. Contact your service representative.

3.2 Checking the Accessory Kit

Figure 4. 9PX1500RT-L / 9PX2000RT-L / 9PX3000RT-L

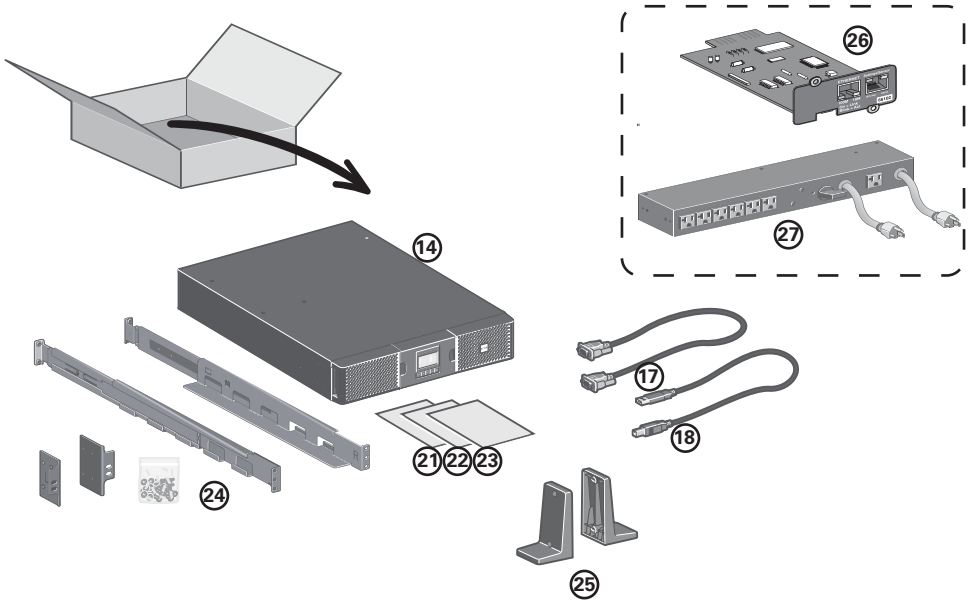

Verify that the following additional items are included with the UPS:

⑭ 9PX UPS
⑰ RS232 communication cable
⑱ USB communication cable
㉑ Software leaflet
㉒ Safety instructions
㉓ Quick start
㉔ Mounting kit for 19-inch enclosures
㉕ 2 supports for tower position

Elements supplied depending on the version or optional
㉖ NMC communication card (optional, standard on Network Bundle models)
㉗ MBP-115 module for 9PX 1500RT (optional)
MBP-120 module for 9PX 2000RT (optional)
MBP-130 module for 9PX 3000RT(optional)

Figure 5. 9PX1500GRT-L / 9PX2200GRT-L / 9PX3000GRT-L

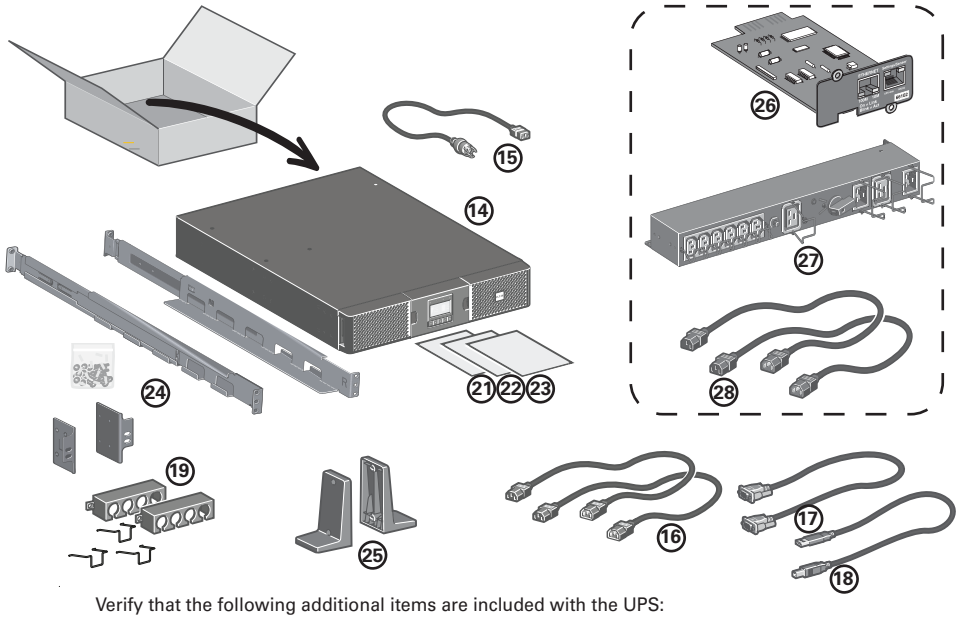

Verify that the following additional items are included with the UPS:

⑭ 9PX UPS

⑮ Connection cable to AC-power source

⑯ 2 connection cables for the protected equipment

⑰ RS232 communication cable

⑱ USB communication cable

⑲ 3 cable locking systems

㉑ Software leaflet

㉒ Safety instructions

㉓ Quick start

㉔ Mounting kit for 19-inch enclosures

㉕ 2 supports for tower position

Elements supplied depending on the version or optional

㉖ NMC communication card(optional,standard on Network Bundle options

㉗ HotSwap MBP module (optional)

㉘ Connection cables between Hotswap MBP module and UPS

Figure 6. 9PXEBM48RT-L / 9PXEBM72RT-L

- If you ordered an optional Extended Battery Module (EBM), verify that the following additional items are included with the EBM:

① Battery power cable with attached battery detection cable
② Stabilizer bracket (4 screws included)
③ Rack kit for 19-inch enclosures (optional)
④ EBM Installation manual.

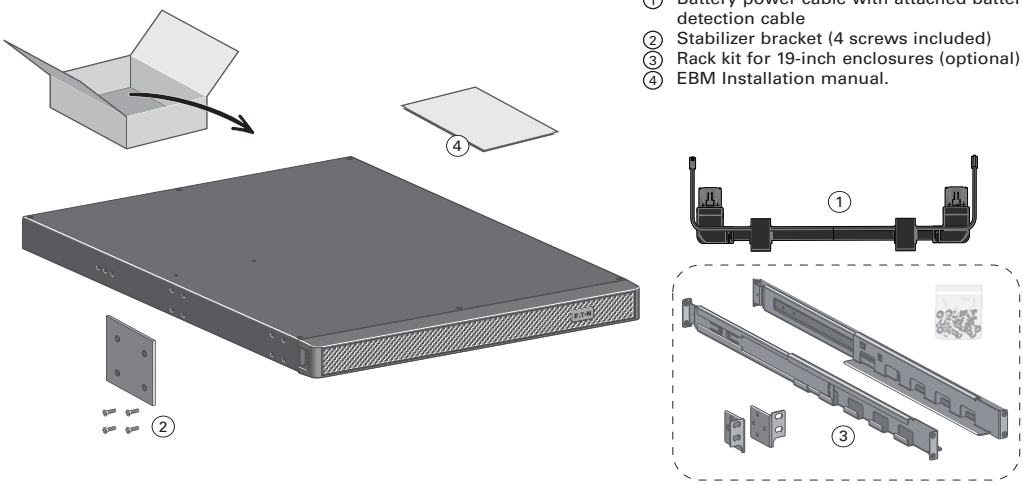

NOTE 1 Discard the EBM user's guide if you are installing the EBM with a new UPS at the same time.

NOTE 2 Use the UPS user's guide to install both the UPS and the EBM.

Remember If you ordered other UPS accessories, refer to specific user manuals to check the packing contents.

3.3 Connecting the Internal Battery

NOTE Do not connect the UPS to the utility until installation is complete.

Figure 7. Internal Battery Connection

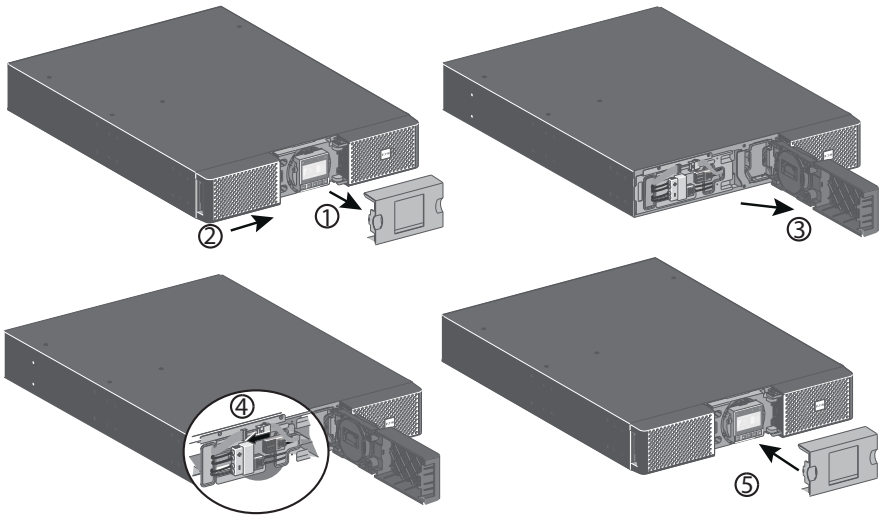

To connect to the UPS:

1. Remove the center cover of the front panel.
2. Push left cover toward to right direction.
3. Open the left side of the front panel.

NOTE A ribbon cable connects the LCD control panel to the UPS. Do not pull on the cable or disconnect it.

CAUTION

A small amount of arcing may occur when connecting the internal batteries. This is normal and will not harm personnel. Connect the cables quickly and firmly.

4. Connect the two different sets of battery connectors together (see image 4 in Figure 7).
5. Put back the front panel, then clip the center cover.

3.4 Tower Installation

Tip If you ordered other UPS accessories, refer to specific user manuals to check the tower installation with the UPS.

To install the cabinet:

1. Place the UPS on a flat, stable surface in its final location.
2. Always keep 6" or 150 mm of free space behind the UPS rear panel for ventilation.
3. If installing additional cabinets, place them next to the UPS in their final location.

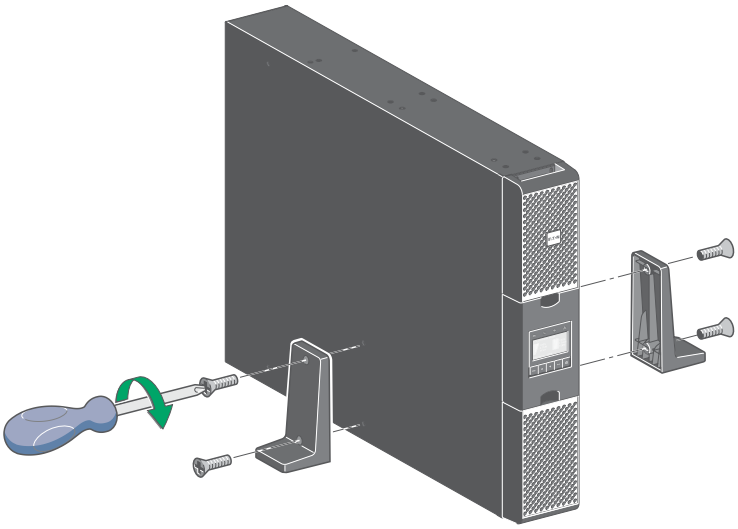

- Adjustment of the orientation of the LCD panel and of the logo.

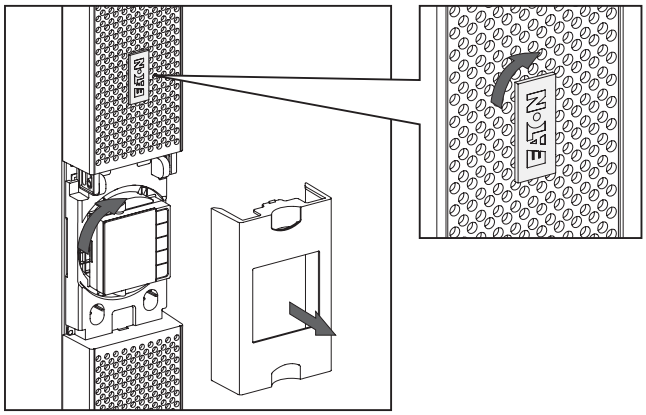

- Adjustment of the angle of vision of the LCD panel.

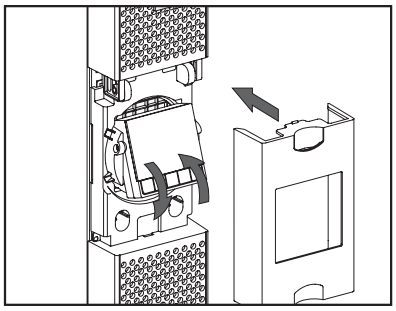

3.5 Rack Installation

- Rack mounting of UPS, EBM, and accessory modules.

Follow steps 1 to 4 for module mounting on the rails.

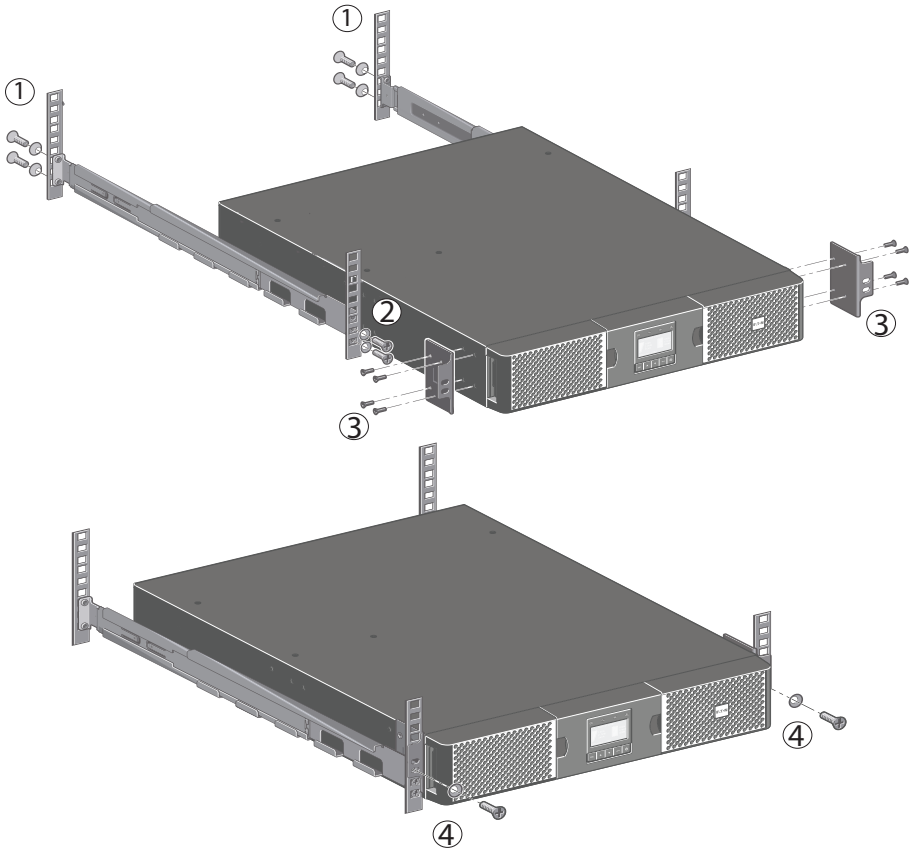

The rails and necessary hardware are supplied by EATON.

3.6 Vertical Installation

NOTE 1 This vertical installation is available only for UL/cTUVus.

NOTE 2 Suitable for mounting on concrete or other noncombustible surfaces only.

- The UPS, EBM, and accessory modules can be installed vertically in a rack or on a wall.

Follow steps 1 to 3 for module mounting on the rails.

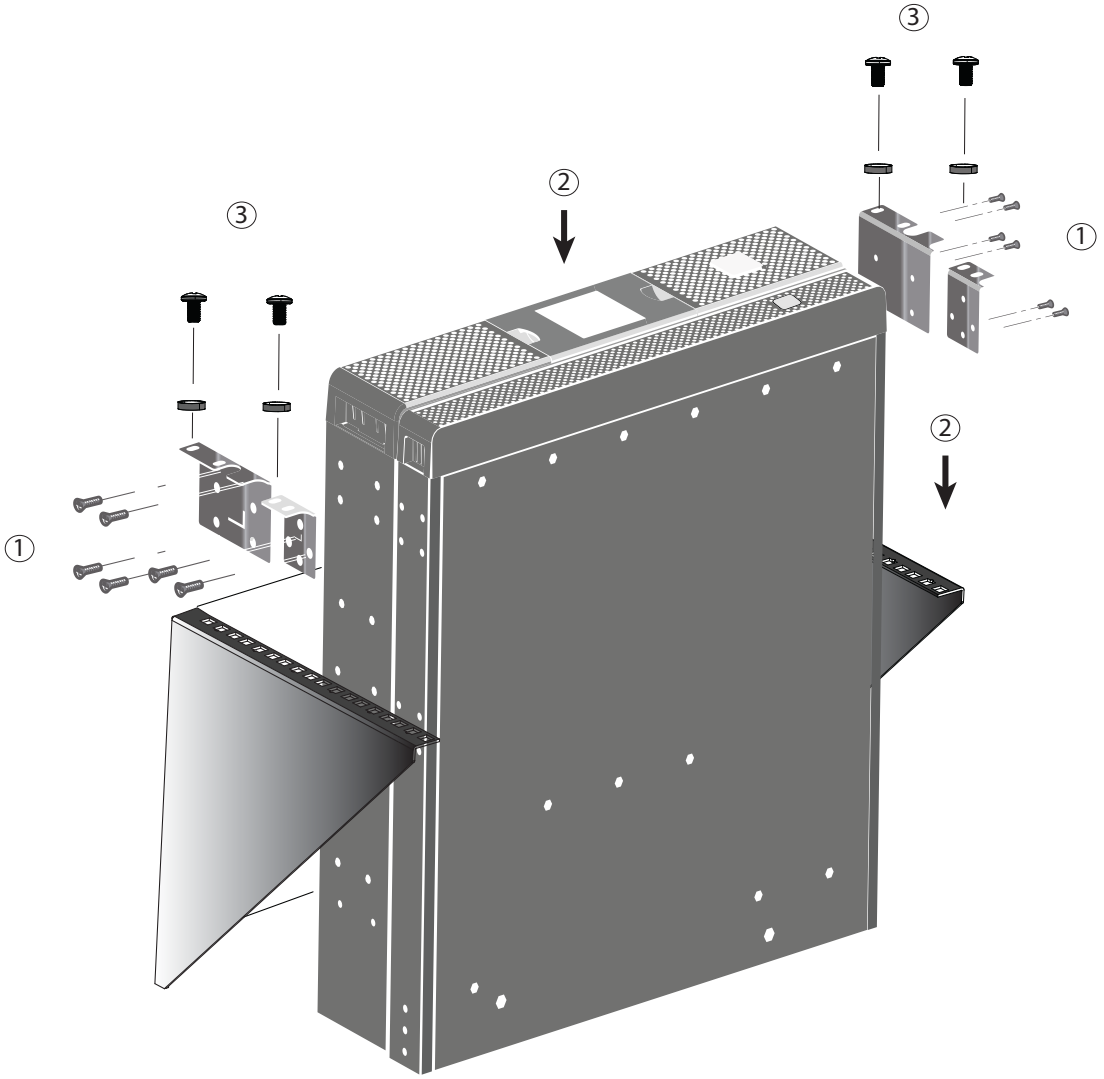

3.7 Connecting the EBM(s)

⚠CAUTION

A small amount of arching may occur when connecting an EBM to the UPS. This is normal and will not harm personnel. Insert the EBM cable into the UPS battery connector quickly and firmly.

1. Plug the EBM power cable(s) into the battery connector(s). Up to 4 EBMs may be connected to the UPS.
2. Verify that the EBM connections are tight and that adequate bend radius and strain relief exist for each cable.
3. Connect the battery detection cable(s) to the connector of the UPS and of the EBM(s).

Figure 8. 9PXEBM Rack Mount Connections

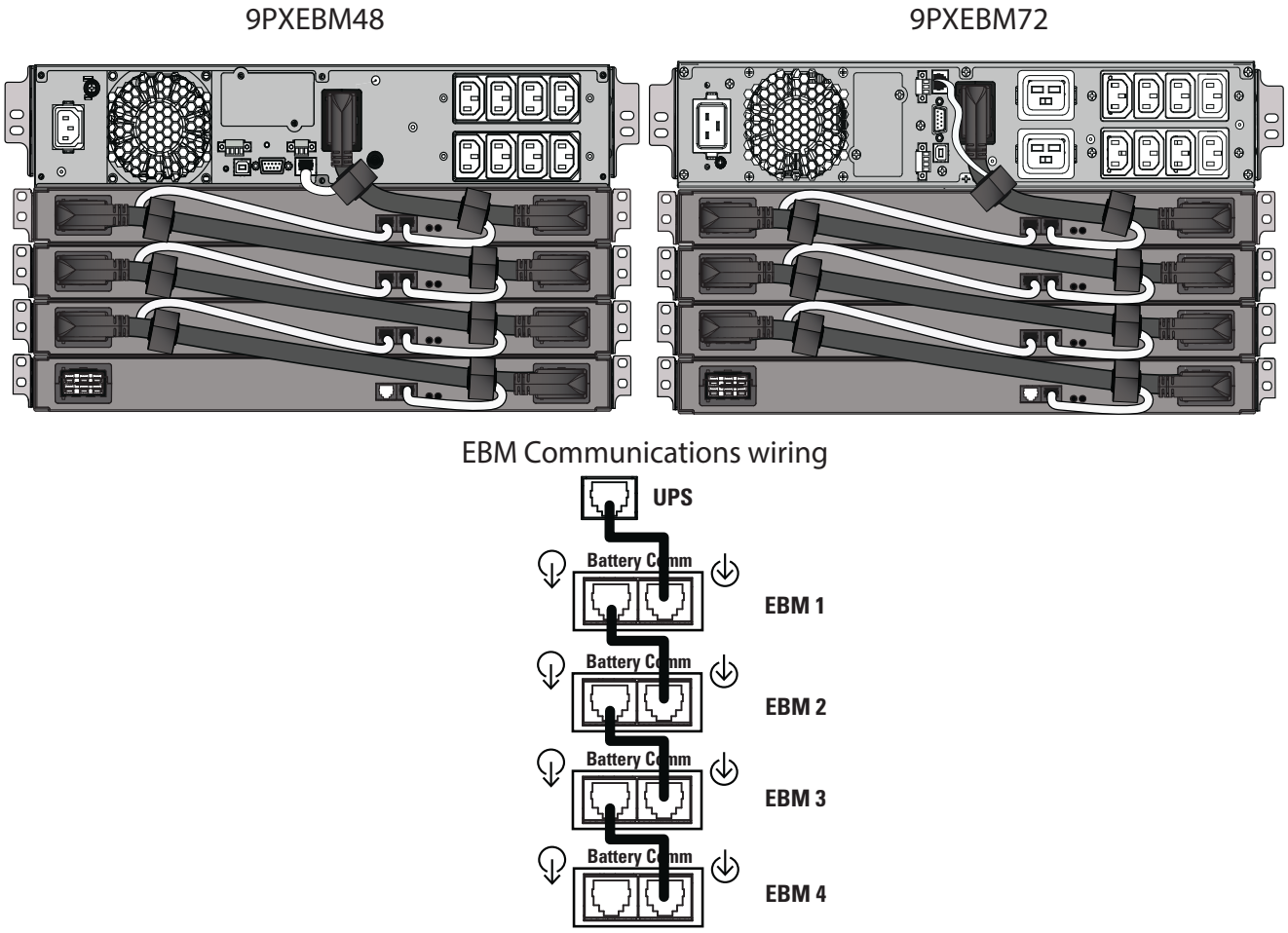

NOTE The EBM communication wiring connections are directional and must be connected in the correct sequence to ensure proper detection, regulation and lifecycle monitoring of the integrated battery management system (BMS).

Figure 9. 9PXEBM Tower Mount Connections

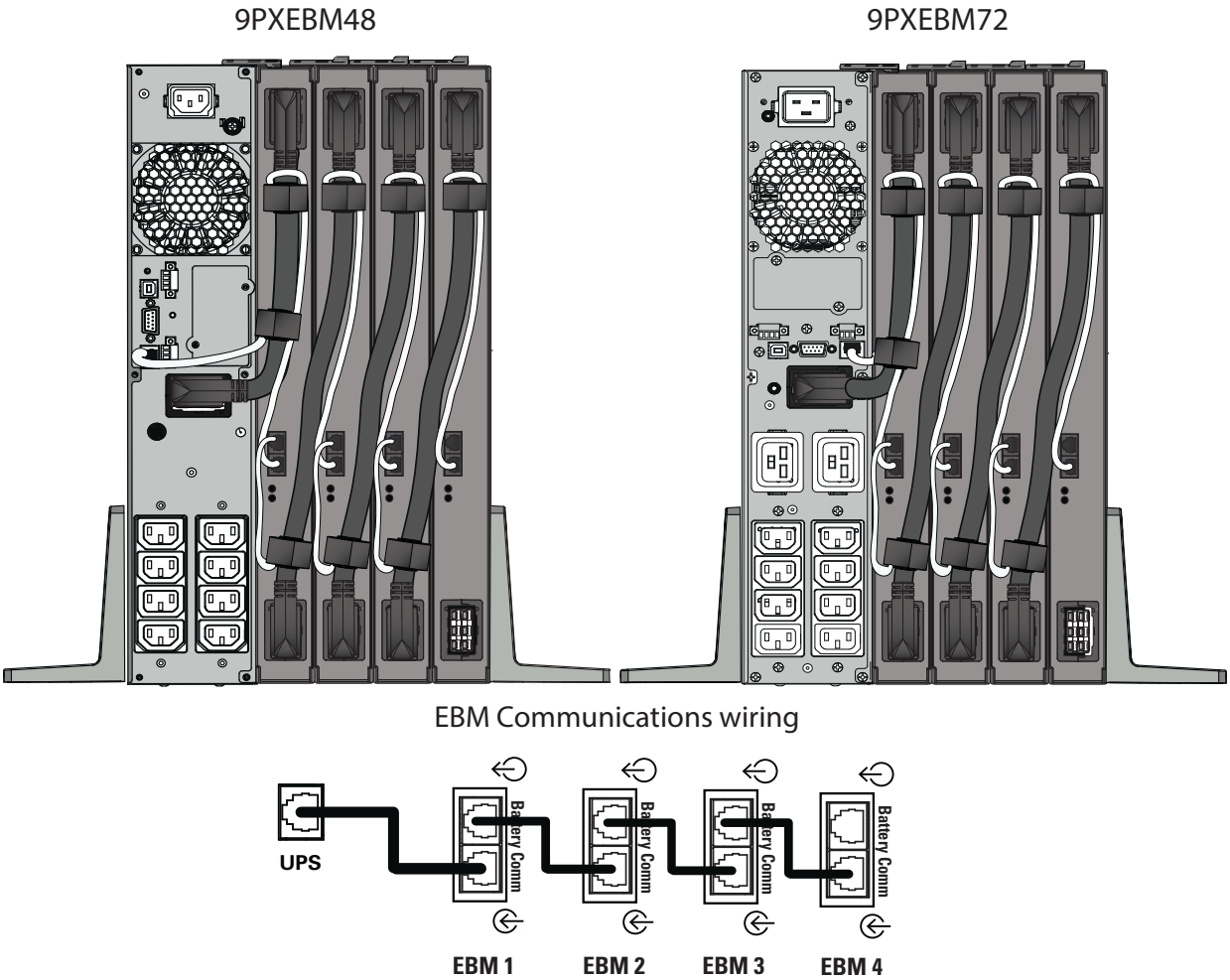

NOTE The EBM communication wiring connections are directional and must be connected in the correct sequence to ensure proper detection, regulation and lifecycle monitoring of the integrated battery management system (BMS).

3.8 Detecting other Accessories

Tip If you ordered other UPS accessories, refer to specific user manuals to check the connection to the UPS.

3.9 UPS Connection without Hotswap MBP Module

Check that the indications on the name plate located on the back of the UPS correspond to the AC-power source and the true electrical consumption of the total load.

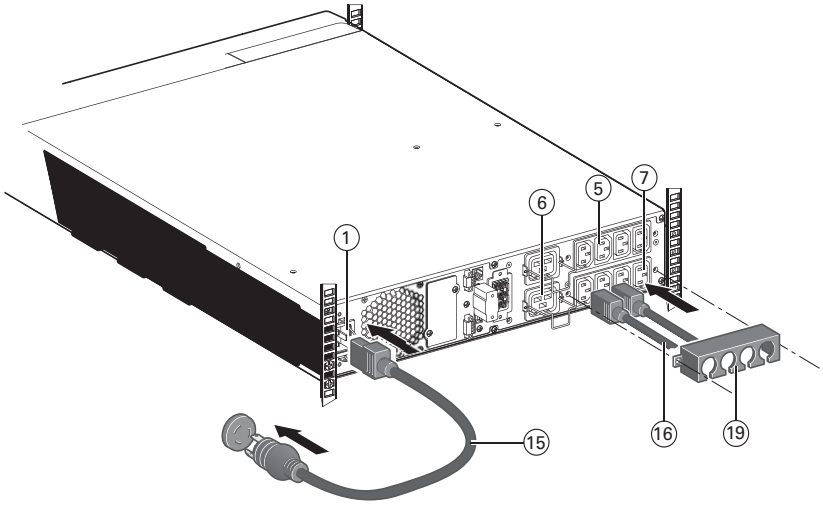

1. 9PX 2000RT-L / 3000RT-L connect the UPS input socket ① to the AC-power source.
   9PX 2200GRT-L / 3000GRT-L / 3000GLRT-L: connect the supplied cable ⑮ (250 V - 16 A) to the socket ①, then to the AC-power source.

2. Connect the loads to the UPS using the cables ⑯.
   It is preferable to connect the priority loads to the outlets marked ⑤ and the non-priority loads to the outlets marked ⑥ ⑦ that can be programmed.
   Connect any high-power devices to the 16 A outlet.

To program shutdown of outlets ⑥ ⑦ during operation on battery power and thus optimise the available backup time, please check the in/out settings.

3. For G models, fit the cable locking system ⑲ that prevents the plugs from being pulled out accidentally.

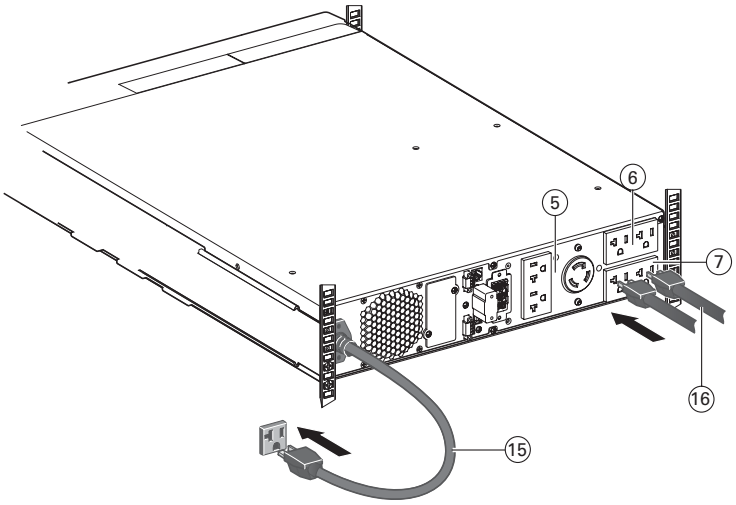

Note. The UPS charges the battery as soon as it is connected to the AC-power source, even if ⏻ button is not pressed
Once the UPS is connected to the AC-power source, eight hours of charging are required before the battery can supply the rated backup time.

3.10 Connection with a Hotswap MBP Module (Optional Accessory)

The HotSwap MBP module makes it possible to service or even replace the UPS without affecting the connected loads.

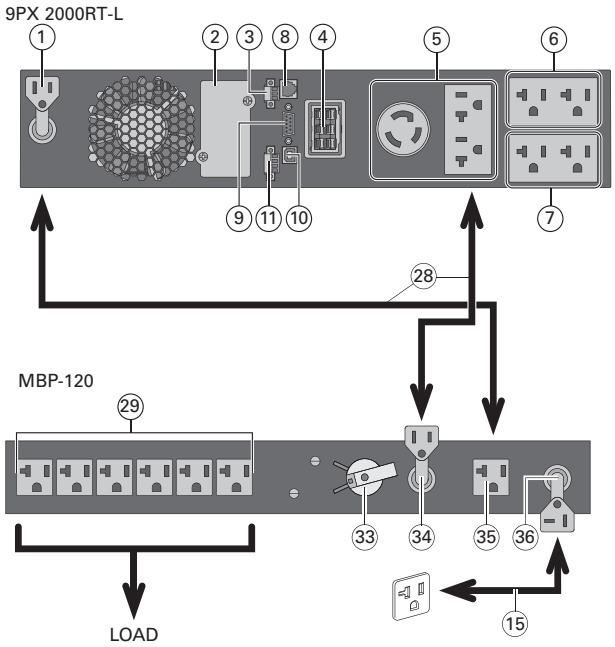

1. Connect the input 36 on the HotSwap MBP module to the AC-power source.
2. Connect the UPS input cable 1 to the “UPS Input socket” 35 on the HotSwap MBP module.
3. Connect the UPS outlet 5 to the “UPS Output” 34 on the HotSwap MBP module (using the cable 28 supplied for G models).
   These cables and the connectors are marked in red.
4. Connect the equipment to the outlets 29 on the HotSwap MBP module. These outlets differ, depending on the version of the HotSwap MBP module.

   Caution: when using HotSwap MBP, do not use UPS outlets to directly power equipment. As operating the bypass switch 33 will cut supply voltage to the equipment.

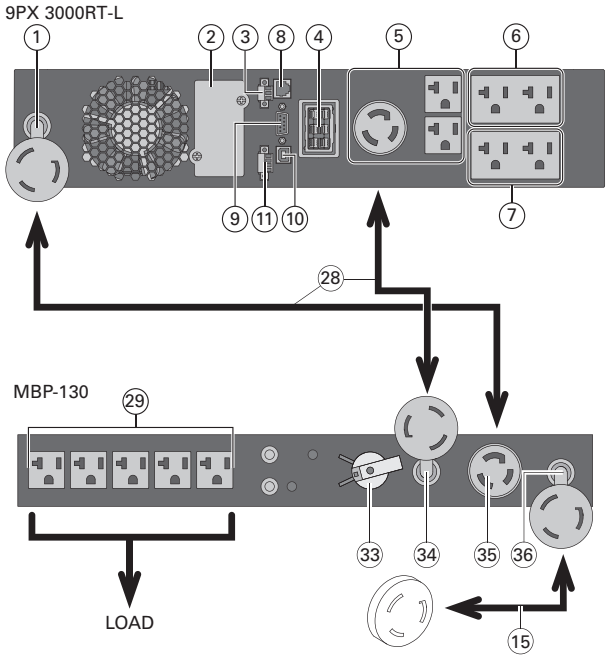

* 9PX 1500RT-L: To connect to MBP-115, follow the same procedure as for the 9PX 2000RT / 9PX 3000RT.

9PX 2200GRT-L & 9PX 3000GRT-L

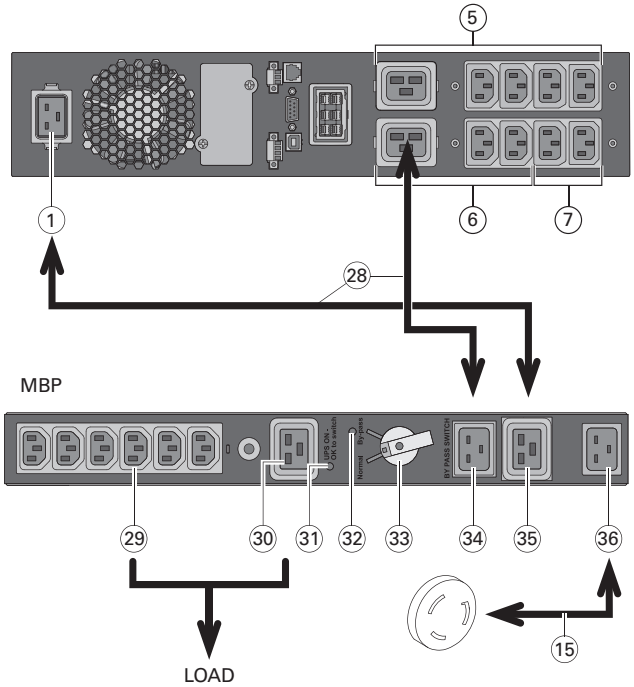

1. Connect the input 36 on the HotSwap MBP module to the AC-power source.
2. Connect the UPS input cable 1 to the “UPS Input socket” 35 on the HotSwap MBP module.
3. Connect the UPS outlet 5 to the “UPS Output” 34 on the HotSwap MBP module (using the cable 28 supplied for G models).
   These cables and the connectors are marked in red.
4. Connect the equipment to the outlets 29 on the HotSwap MBP module. These outlets differ, depending on the version of the HotSwap MBP module.

   Caution: when using HotSwap MBP, do not use UPS outlets to directly power equipment. As operating the bypass switch 33 will cut supply voltage to the equipment.

HotSwap MBP module operation

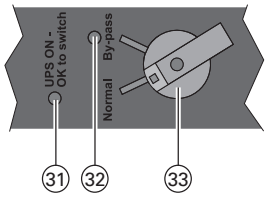

The HotSwap MBP module has a rotary switch 33 with two positions:

Normal	the load is supplied by the UPS, LED 31 is on.
Bypass	the load is supplied directly by the AC-power source. LED 32 is on.

UPS start-up with the HotSwap MBP module

1. Check that the UPS is correctly connected to the HotSwap MBP module.
2. Set switch 33 to Normal position.
3. Start the UPS by pressing the ON/OFF button ⏻ on the UPS control panel.

The load is supplied by the UPS.
LED 31 "UPS ON - OK to switch" on the HotSwap MBP module goes ON.

HotSwap MBP module test

1. Set switch 33 to Bypass position and check that the load is still supplied.
2. Set switch 33 back to Normal position.

Chapter 4 Communication

4.1 Communication Ports

The RS232 and USB communication ports cannot operate simultaneously.

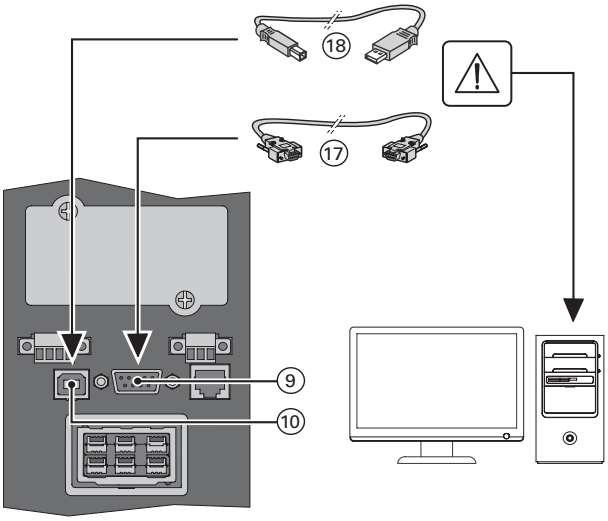

1. Connect the RS232 ⑰ or USB ⑱ communication cable to the serial or USB port on the computer equipment.

2. Connect the other end of the communication cable ⑰ or ⑱ to the USB ⑩ or RS232 ⑨ communication port on the UPS.

The UPS can now communicate with EATON power management software.

Installation of the communication cards

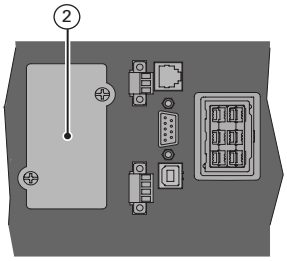

It is not necessary to shutdown the UPS before installing a communication card.

1. Remove the slot cover ② secured by screws.
2. Insert the communication card in the slot.
3. Secure the card cover with the 2 screws.

Characteristics of the contact RS232 communication port

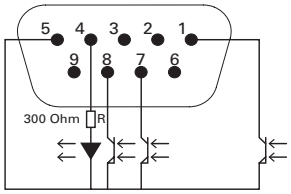

Pin	Signal	Direction	Function
1	Bat Low	Output	Low Battery Output
2	TxD	Output	Transmit to external device
3	RxD	Input	Receive from external device
4	I/P SIG	Input	-
5	GNDS	-	Signal Common tied to chassis
6	PNP	Input	Plug and Play
7	UPS ON	Output	UPS ON
8	BAT Mode	Output	-
9	+5V	Output	Power supply for external signals or options

Contact characteristics (optocoupler)

- Voltage: 48 V DC max
- Current: 25 mA max

4.2 UPS Remote Control Functions

Programmable Signal Inputs

The 9PX incorporates 3 programmable signal inputs: one Remote Power Off (RPO) input terminal, one Remote On/Off (ROO) input terminal, one RS-232 input (pin-4). Signal inputs can be configured see Settings > Com settings > Signal Input in to have one of the following functions:

Function	Description
No	No function, please choose a function if you want to use input signal
RPO	Remote Power Off (RPO) is used to shutdown the UPS remotely
ROO	Remote On/Off allows remote action of button to switch On/Off the UPS. (Cold start is prohibited while using the ROO function)
Forced bypass	If feeding the load the unit goes to bypass operation and stays there regardless of the bypass state until the input is inactivated
Building alarm	Active input generates an alarm “building alarm”
On generator	Active input disables synchronization and transfers to bypass
Remote shutdown	Active input turns UPS output (or outlet groups) off after a user defined shutdown delay but keeps on charging batteries according to a selected charging scheme, inactive input does not abort shutdown countdown. Depending on the “Restart” parameter (see Settings > Com Settings > Shutdown commands on page 16) the unit may startup automatically.

IMPORTANT

Warning Signal inputs have no function by default please choose a function through the LCD **(Settings > Com settings > Input signals).**

See below 2 examples of configuration with RPO terminal used as RPO function and ROO terminal use as ROO function:

Remote Power Off (RPO)

RPO is used to shutdown the UPS remotely when the contact is open. This feature can be used for shutting down the load and the UPS by thermal relay, for instance in the event of room over temperature. When RPO is activated, the UPS shuts down the output and all its power converters immediately. The UPS remains on to alarm the fault. The RPO circuit is an IEC 60950 safety extra low voltage (SELV) circuit. This circuit must be separated from any hazardous voltage circuits by reinforced insulation.

- The RPO must not be connected to any utility connected circuits. Reinforced insulation to the utility is required. The RPO switch must be a dedicated latching-type switch not tied into any other circuit. The RPO signal must remain active for at least 250 ms for proper operation.
- To ensure the UPS stops supplying power to the load during any mode of operation, the input power must be disconnected from the UPS when the Remote Power Off function is activated.

Leave the RPO connector installed in the RPO port on the UPS even if the RPO function is not needed.

RPO connections:

RPO	Comments
Connector type	Terminal, 14 AWG maximum wires
External breaker specification	60 V DC/30V AC 20mA max

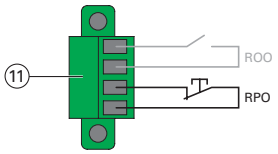

Remote On/Off (ROO)

- Remote On/Off allows remote action of button to switch On/Off the UPS.
- When contact changes from open to closed, the UPS is switched-on (or stays On).
- When contact changes from closed to open, the UPS is switched-off (or stays Off).
- On/Off control via button has priority over the remote control.

RPO	Comments
Connector type	Terminal, 14 AWG maximum wires
External breaker specification	60 V DC/30V AC 20mA max

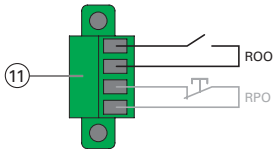

Remote Control Connection and Test

1. Check the UPS is shut down and the electrical supply network disconnected.
2. Remove RPO connector from the UPS by unfitting the screws.
3. Connect a normally closed volt-free contact between the two pins of connector.

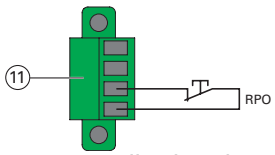 Normally Closed	Contact open: shut down of UPS To return to normal operation, deactivate the external remote shut down contact and restart the UPS from the front panel.

4. Plug the RPO connector into the back of the UPS and fix the screws.
5. Connect and restart the UPS according to the previously described procedures.

6. Activate the external remote shut down contact to test the function. Always test the RPO function before applying your critical load to avoid accidental load loss.

Programmable Signal Outputs

The 9PX incorporates 4 programmable signal outputs: one relay output, three optocouplers outputs (pin- 1/7/8). Signal outputs can be configured (see Settings > Com settings > Output Signals in to report the following information:

Signal	Default Assignment	Description
On battery (On bat)	DB9-Pin 8	UPS is in battery mode
Low battery (Low bat)	DB9-Pin 1	Battery is nearly empty
Battery fault (Bat fault)	-	Battery fault
Bypass	Relay output **(1)**	UPS is operating in Bypass mode
UPS OK	DB9-Pin 7	Load is powered (from inverter or bypass), with no alarm
Load powered	-	Load is powered (from inverter or bypass)
Load protected	-	UPS is on inverter, with no alarm and ready to go to battery
General alarm	-	• Choose events that will trigger this alarm trough the LCD • (Settings > Com settings > General alarm) for more information on possible events please look at page 16.
Ext charger ON	-	Control an optional external battery charger on and off.
OVL pre-alarm	-	Overload pre-alarm

(1) Relay output:

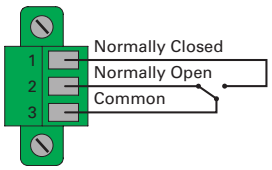

Connectivity Cards

Connectivity cards allow the UPS to communicate in a variety of networking environments and with different types of devices. The 9PX models have one available communication bay for the following connectivity cards:

- **Network-M2 card** — has SNMP and HTTP capabilities as well as monitoring through a Web browser interface; connects to a Gigabit Ethernet network. In addition, a Environmental Monitoring Probe can be attached to obtain humidity, temperature, smoke alarm, and security information.
- **INDGW-M2 card**- has SNMP and HTTP capabilities and a Modbus to facilitate remote monitoring of the UPS system through any Building Management System.

- **Relay-MS card**- has isolated dry contact (Form-C) relay outputs for UPS status: Utility failure, Battery low, UPS alarm/OK, or on Bypass.

Figure 10. Connectivity Card Options

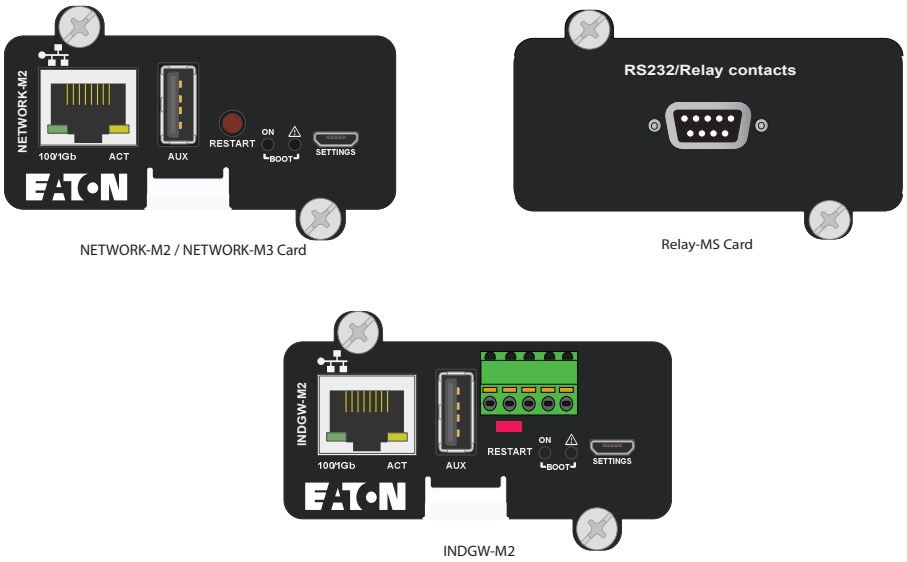

Eaton Intelligent Power Software suite

Eaton Intelligent Power Software suite is available from eaton.com/download. Eaton Software suite provides up-to-date graphics of UPS power and system data and power flow. It also gives you a complete record of critical power events, and it notifies you of important UPS or power information. If there is a power outage and the 9PX UPS battery power becomes low, Eaton Software suite can automatically shut down your computer system to protect your data before the UPS shutdown occurs.

Chapter 5 Operation

5.1 Start-up and Normal Operation

To start the UPS:

1. Verify that the internal batteries are connected. See section 3.3 *Connecting the Internal Battery* .
2. If optional EBMs are installed, verify that the EBM are connected to the UPS. See section 3.7 *Connecting the EBM(s)* .
3. Verify that the UPS power cord is plugged in.
4. The UPS front panel display illuminates and shows EATON logo.
5. Verify that the UPS status screen shows ⏻
6. Press the ⏻ button on the UPS front panel for at least 2 seconds.
7. Check the UPS front panel display for active alarms or notices. Resolve any active alarms before continuing. See section 7.1 *Typical Alarms and Faults* . If the ⚠ indicator is on, do not proceed until all alarms are clear. Check the UPS status from the front panel to view the active alarms. Correct the alarms and restart if necessary.
8. Verify that the ∿ indicator illuminates solid, indicating that the UPS is operating normally and any loads are powered and protected. The UPS should be in normal mode.

5.2 Starting the UPS on Battery

Before using this feature, the UPS must have been powered by utility power with output enabled at least once. Battery start can be disabled. See the "Cold start" setting in "ON/OFF Settings" in .

To start the UPS on battery:

1. Press the ⏻ button on the UPS front panel until the UPS front panel display illuminates and shows a status of "UPS starting...". The UPS transfers from Standby mode to Battery mode. The ▭ indicator illuminates solid. The UPS supplies power to your equipment.
2. Check the UPS front panel display for active alarms or notices besides the "Battery mode" notice and notices that indicate missing utility power. Resolve any active alarms before continuing. See the "Troubleshooting" section . Check the UPS status from the front panel to view the active alarms. Correct the alarms and restart if necessary.

5.3 UPS Shutdown

To shut down the UPS:

1. Press the ⏻ button on the front panel for three seconds. A confirmation message will appear. When confirmed, the UPS starts to beep and shows a status of "UPS shutting OFF...". The UPS then transfers to Standby mode, and the ∿ indicator turns off.

5.4 Operating Modes

The Eaton 9PX front panel indicates the UPS status through the UPS indicators, see section 2.4 *Control Panel* .

Online Mode ∿

During Online mode, the ∿ indicator illuminates solid and the UPS is powered from the utility. The UPS monitors and charges the batteries as needed and provides filtered power protection to your equipment.

Optional High Efficiency and Energy Saving settings minimize heat contribution to the rack environment. See section 2.7 *User Settings* .

Battery Mode

When the UPS is operating during a power outage, the alarm beeps once every ten seconds and the indicator illuminates solid. The necessary energy is provided by the battery. When the utility power returns, the UPS transfers to Online mode operation while the battery recharges. If battery capacity becomes low while on Battery mode, the audible alarm beeps once every 3 seconds. This warning is approximate, and the actual time to shutdown may vary significantly. Shutdown all applications on the connected equipment because automatic UPS shutdown is imminent. When utility power is restored after the UPS shuts down, the UPS automatically restarts.

Low-Battery Warning

- The indicator illuminates solid.
- The audio alarm beeps every three seconds.

The remaining battery power is low. Shut down all applications on the connected equipment because automatic UPS shutdown is imminent.

End of battery backup time

- LCD displays "End of backup time".
- All the LEDs go OFF.
- The audio alarms stops.

Bypass Mode

In the event of a UPS overload or internal failure, the UPS transfers your equipment to utility power. Battery mode is not available and your equipment is not protected; however, the utility power continues to be passively filtered by the UPS. The indicator illuminates. Depending on overload conditions, the UPS remains in Bypass mode for at least 5 seconds and will stay in this mode if three transfers to Bypass occur within 20 minutes.

The UPS transfers to Bypass mode when:

- the user activates Bypass mode through the front panel.
- the UPS detects an internal failure.
- the UPS has an overtemperature condition.
- the UPS has an overload condition listed in Table 12 .

The UPS shuts down after a specified delay for overload conditions listed in Table 12 . The UPS remains on to alarm the fault.

5.5 Return of AC Power

Following an outage, the UPS restarts automatically when AC input power returns (unless the restart function has been disabled) and the load is supplied again.

5.6 Setting High Efficiency Mode

In High Efficiency mode, the UPS operates normally on Bypass and transfers to Online (or Battery) mode in less than 10 ms when utility fails. Transfers to High Efficiency mode will be active after 5 minutes of Bypass voltage monitoring: if Bypass quality is not in tolerance, then the UPS will remain in Online mode.

Eaton recommends to use the HE mode only to protect IT equipment.

To set the High Efficiency mode:

1. Select Settings, In/Out settings, and High Efficiency mode.
2. Select Enabled and Enter to confirm.
3. The UPS transfers to High Efficiency mode after 5 minutes.

5.7 Configuring Bypass Settings

The following settings are available for configuring Bypass operation.

Changing the settings changes UPS behavior and may result in decreased protection.

Bypass Voltage Low Limit

The default disables a transfer to Bypass if the measured bypass voltage level is below the nominal output voltage minus 20%. You can configure the setting for another voltage value. This setting can be overruled by the "Qualify Bypass" setting.

Bypass Voltage High Limit

The default disables a transfer to Bypass if the measured bypass voltage level is above the nominal output voltage plus 15%. You can configure the setting for another voltage value. This setting can be overruled by the "Qualify Bypass" setting.

Qualify Bypass

The default setting ("In spec") allows a transfer to Bypass only when Bypass is within the following specifications:

- Bypass voltage is between the "Bypass Voltage Low Limit" and "Bypass Voltage High Limit" settings
- Bypass frequency is within nominal frequency 5%.

You can prohibit Bypass ("Never") or always allow Bypass with no specification checking ("Always"). For "Always on UPS Fault," transfer to Bypass is always made on UPS fault; otherwise, operation proceeds as with the default setting.

Synchronization Window

The UPS tries to synchronize with Bypass when the Bypass frequency is less than the value set for the "Synchronization Window" setting. When the Bypass frequency is more than the set value, the UPS goes to nominal frequency.

Unsynchronized Transfers

When Qualify Bypass is set to "Always" or "Always on Fault" you can select the interruption time when transferring to bypass, default setting is "Half Cycle" but can be changed to "Full cycle".

5.8 Configuring Battery Settings

Low battery warning

During discharge, the low battery alarm is activated if the remaining runtime goes below 3 minutes or less than the setting capacity threshold (0 % by default). This threshold can be modified.

Restart battery level

This setting is used to define the battery restart level. The battery level must reach this threshold to enable UPS start.

5.9 Retrieving the Event Log

To retrieve the Event log through the display:

1. Press any button to activate the menu options, then select Event log.
2. Scroll through the listed events.

5.10 Retrieving the Fault Log

To retrieve the Fault log through the display:

1. Press any button to activate the menu options, then select Fault log.
2. Scroll through the listed faults.

Chapter 6 UPS Maintenance

6.1 Storing the Equipment

If you store the equipment for a long period, recharge the battery every 6 months by connecting the UPS to utility power. The internal batteries charge to 90% capacity in less than 3 hours. However, Eaton recommends that the batteries charge for 48 hours after long-term storage. Check the battery recharge date on the shipping carton label. If the date has passed and the batteries were never recharged, do not use them. Contact your service representative.

6.2 Replacing Batteries

IMPORTANT

DO NOT DISCONNECT the batteries while the UPS is in Battery mode.

Batteries can be replaced easily without turning off the UPS or disconnecting the load. If you prefer to remove input power to change the batteries, see "UPS Shutdown".

Consider all warnings, cautions, and notes before replacing batteries.

- Servicing should be performed by qualified service personnel knowledgeable of batteries and required precautions. Keep unauthorized personnel away from batteries.
- Batteries can present a risk of electrical shock or burn from high short circuit current. Observe the following precautions:
  1. Remove watches, rings, or other metal objects,
  2. Use tools with insulated handles,
  3. Do not lay tools or metal parts on top of batteries,
  4. Wear rubber gloves and boots.
- When replacing batteries, replace with the same type and number of batteries or battery packs. Contact your service representative to order new batteries.
- Proper disposal of batteries is required. Refer to your local codes for disposal requirements.
- Never dispose of batteries in a fire. Batteries may explode when exposed to flame.
- Do not open or mutilate the battery or batteries. Released electrolyte is harmful to the skin and eyes and may be extremely toxic.
- Determine if the battery is inadvertently grounded. If inadvertently grounded, remove source from ground. Contact with any part of a grounded battery can result in electrical shock. The likelihood of such shock can be reduced if such grounds are removed during installation and maintenance (applicable to equipment and remote battery supplies not having a grounded supply circuit).
- ELECTRIC ENERGY HAZARD. Do not attempt to alter any battery wiring or connectors. Attempting to alter wiring can cause injury.
- Disconnect charging source prior to connecting or disconnecting battery terminals.

Replacing the internal battery

The internal battery is heavy. Use caution when handling the heavy batteries.

Figure 11. Internal Battery Pack Replacement

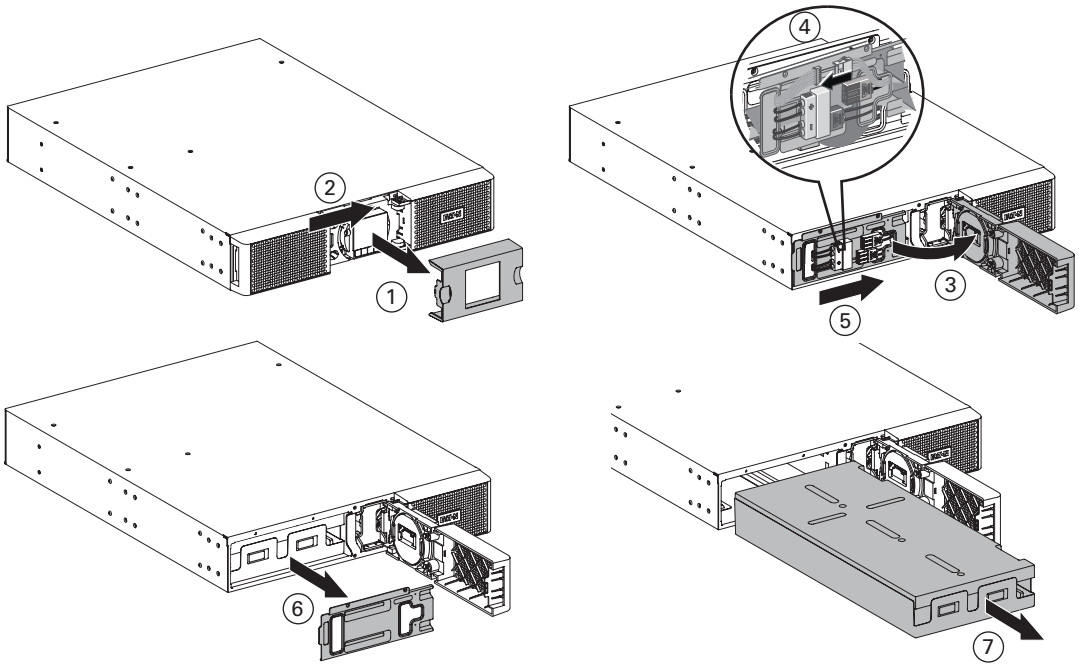

To replace the battery pack:

1. Remove the center cover of the front panel.
2. Push left cover toward to right direction.
3. Open the battery door.
4. Disconnect the main battery cable and the BMS cable connectors.

NOTE A ribbon cable connects the LCD control panel to the UPS. Do not pull on the cable or disconnect it.

5. Remove the two screws to pull out the metal protection cover of the battery.
6. Pull out the plastic handle of the battery pack, and slide the pack out slowly on to a flat and stable surface. Use two hands to support the battery pack. See "Recycling the used equipment" on page 38 for proper disposal.
7. Verify that the replacement batteries have the same rating as the batteries being replaced.
8. Put the new battery pack into the UPS. Push the battery pack firmly, reconnect the red and black battery connectors then reconnect the BMS communication cable.
9. Verify that all of the alarms have cleared on the display.
10. Screw back the metal protection cover and the front panel, then clip the center cover.
11. If there are no EBM modules that need to be replaced continue to the 6.3 *Battery Settings Reset* .
12. If the UPS was shut down during the battery replacement process see 5.1 *Start-up and Normal Operation* .

Replacing the EBM(s)

The EBM is heavy. Lifting the cabinet into a rack requires a minimum of two people.

To replace the EBM(s):

1. Unplug the EBM power cable and battery detection cable from the UPS. If additional EBM(s) are installed, unplug the EBM power cable and battery detection cable from each EBM.
2. Replace the EBM(s). See "Recycling the used equipment" for proper disposal.

   A small amount of arcing may occur when connecting an EBM to the UPS. This is normal and will not harm personnel. Insert the EBM cable into the UPS battery connector quickly and firmly.
3. Plug the EBM cable(s) into the battery connector(s). Up to four EBMs may be connected to the UPS.
4. Verify that the EBM connections are tight and that adequate bend radius and strain relief exist for each cable.
5. Connect the battery detection cable(s) to the connector of the UPS and of the EBM(s).
6. Continue to the 6.3 *Battery Settings Reset*.
7. If the UPS was shut down during the battery replacement process see 5.1 *Start-up and Normal Operation* .

6.3 Battery Settings Reset

After replacement of the internal UPS batteries and extended battery modules the BMS auto setup and battery life settings will need to be reset in the "*Control*" menu of the display.

1. Reset the BMS auto setup function in the "Functions Reset" option of the control menu.

Figure 12. BMS Auto Setup Reset

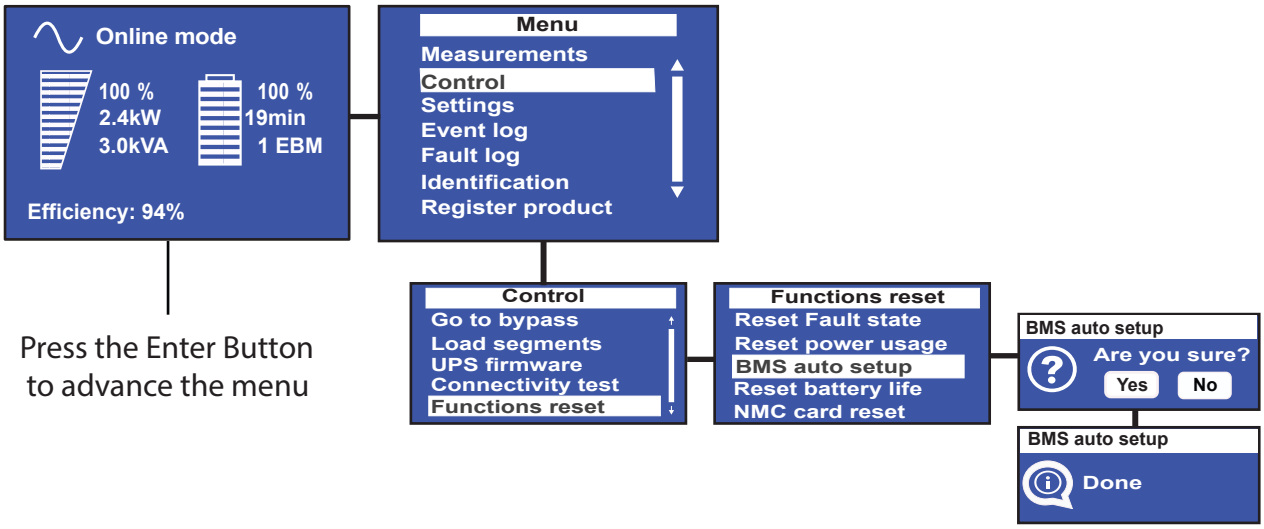

2. Reset the battery life counter in the "Functions Reset" option of the control menu.

Figure 13. Battery Life Reset

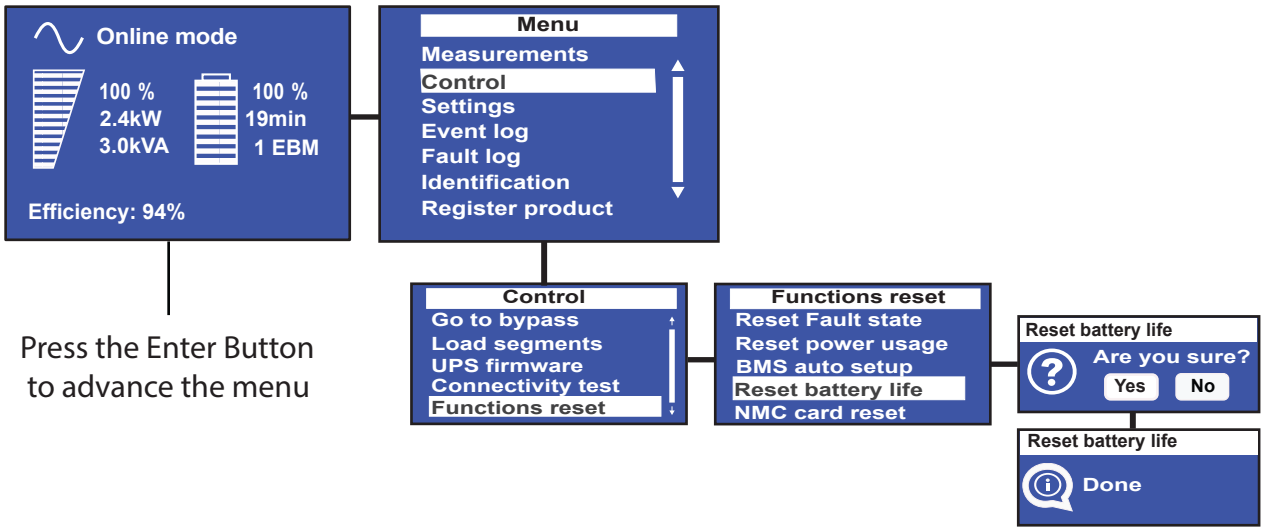

Return the UPS to Normal Operation

If the UPS internal batteries and external battery packs were replaced without powering down the UPS:

1. Check the UPS front panel display for active alarms or notices. Resolve any active alarms before continuing. See section 7.1 *Typical Alarms and Faults* . If the ⚠ indicator is on, do not proceed until all alarms are clear.
2. Verify that the ∿ indicator illuminates solid, indicating that the UPS is operating normally and any loads are powered and protected. The UPS should be in normal mode. See 5.1 *Start-up and Normal Operation* .

If the UPS internal batteries and external battery packs were replaced and the UPS was powered off:

1. Verify that the internal batteries are connected. See section 3.3 *Connecting the Internal Battery* .
2. If optional EBMs are installed, verify that the EBM are connected to the UPS. See section 3.7 *Connecting the EBM(s)* .
3. See section 5.1 *Start-up and Normal Operation* for powering the UPS back to normal operation.
4. If the UPS has a MBP module attached see 3.8 *Detecting other Accessories* for the correct startup procedure.

6.4 Replacing the UPS Equipped with a HotSwap MBP

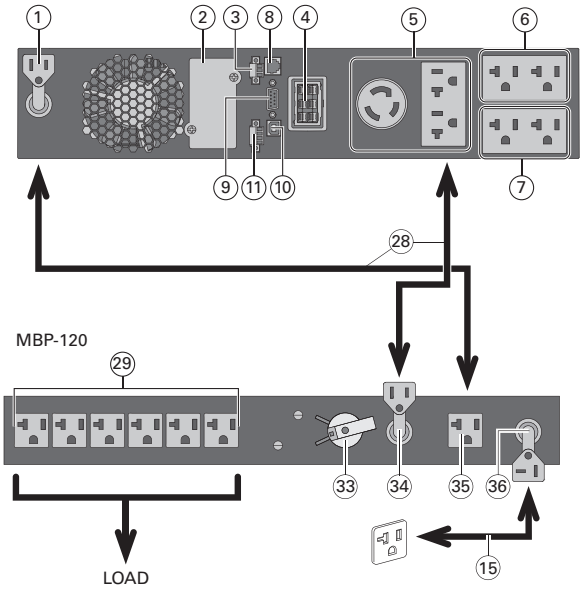

The **HotSwap MBP** module makes it possible to service or even replace the UPS without affecting the connected loads.

Maintenance

1. Set switch (33) to Bypass position. The red LED on the **HotSwap MBP** module goes ON, indicating that the load is supplied directly with AC input source power.
2. Stop the UPS by pressing the ⏻ button on the UPS control panel. LED (31) "UPS ON - OK to switch" goes OFF, the UPS can now be disconnected and replaced.

Return to normal operation

1. Check that the UPS is correctly connected to the **HotSwap MBP** module.
2. Start the UPS by pressing the ⏻ button on the UPS control panel. LED (31) "UPS ON - OK to switch" on the **HotSwap MBP** module goes ON (otherwise, there is a connection error between the **HotSwap MBP** module and the UPS).
3. Set switch (33) to Normal position. The red LED on the **HotSwap MBP** module goes OFF.

6.5 Recycling The Used Equipment

Contact your local recycling or hazardous waste center for information on proper disposal of the used equipment.

RISK OF ELECTRIC SHOCK - Observe the warning associated with the risk of electric shock symbol.

This symbol indicates that you should not discard the UPS or the UPS batteries in the trash. This product contains sealed, Lithium-Ion batteries and must be disposed of properly. For more information, contact your local recycling/reuse or hazardous waste center.

This symbol indicates that you should not discard waste electrical or electronic equipment (WEEE) in the trash. For proper disposal, contact your local recycling/reuse or hazardous waste center.

Chapter 7 Troubleshooting

7.1 Typical Alarms and Faults

The Eaton 9PX are designed for durable, automatic operation and also alert you whenever potential operating problems may occur. Usually the alarms shown by the control panel do not mean that the output power is affected. Instead, they are preventive alarms intended to alert the user.

- Events are silent status information that are recorded into the Event log. Example = "AC freq in range".
- Alarms are recorded into the Event log and displayed on the LCD status screen with the logo blinking. Some alarms may be announced by a beep every 3 seconds. Example = "Battery low".
- Faults are announced by a continuous beep and red LED, recorded into the Fault log and displayed on the LCD with a specific message box. Example = Out. short circuit.

Use the following troubleshooting chart to determine the UPS alarm condition.

Checking the Alarms and Faults

To check the Event log or Fault log :

1. Press any button on the front panel display to activate the menu options.
2. Press the button to select Event log or Fault log.
3. Scroll through the listed events or faults.

The following table describes typical conditions.

Conditions	Possible cause	Action
Battery mode LED is On. 1 beep every 10 seconds	A utility failure has occurred and the UPS is in battery mode.	The UPS is powering the equipment with battery power. Prepare your equipment for shutdown.
Battery mode LED is On. 1 beep every 3 seconds	The UPS is in Battery mode and the battery is running low.	This warning is approximate, and the actual time to shutdown may vary significantly. Depending on the UPS load and number of Extended Battery Modules (EBMs), the "Battery Low" warning may occur before the batteries reach 20% capacity.
No battery LED is On Beep continuous	The batteries are disconnected.	Verify that all batteries are properly connected. To clear a battery disconnected alarm a battery test must be initiated. See Table 5. If the condition persists, contact your service representative.
Battery fault LED is On Beep continuous	The battery test is failed due to bad or disconnected batteries.	Verify that all batteries are properly connected. If the condition persists, contact your service representative. To clear a battery disconnected alarm a battery test must be initiated. See Table 5. If the condition persists, contact your service representative.

Conditions	Possible cause	Action
The UPS does not provide the expected backup time.	The batteries need charging or service.	Apply utility power for 48 hours to charge the batteries. If the condition persists, contact your service representative.
Bypass mode LED is on.	An overload or a fault has occurred, or a command has been received and the UPS is in Bypass	Equipment is powered but not protected by the UPS. Check for one of the following alarms: overtemperature, overload or UPS LED is on. failure.
Power Overload LED is on.	Power requirements exceed the UPS capacity (greater than 100% of nominal; see “User Settings” on page 8 for specific output overload ranges).	Remove some of the equipment from the UPS. The UPS continues to operate, but may switch to Bypass mode or shut down if the load increases. The alarm resets when the condition becomes inactive.
UPS Overtemperature LED is on. 1 beep every 3 seconds	The UPS internal temperature is too high or a fan has failed. At the warning level, the UPS generates the alarm but remains in the current operating state. If the temperature rises another 10°C, the UPS transfers to Bypass mode or shuts down if Bypass is unusable.	If the UPS transferred to Bypass mode, the UPS will return to normal operation when the temperature drops 5°C below the warning level. If the condition persists, shut down the UPS. Clear vents and remove any heat sources. Allow the UPS to cool. Ensure the airflow around the UPS is not restricted. Restart the UPS. If the condition continues to persist, contact your service representative.
The UPS does not start	The input source is not connected correctly.	Check the input connections.
	The Remote Power Off (RPO) switch is active or the RPO connector is missing.	If the UPS Status menu displays the "Remote Power Off" notice, inactivate the RPO input.

7.2 Silencing the Alarm

Press the ESC (Escape) button on the front panel display to silence the alarm. Check the alarm condition and perform the applicable action to resolve the condition. If the alarm status changes, the alarm beeps again, overriding the previous alarm silencing.

7.3 Service and Support

If you have any questions or problems with the UPS, call your **Local Distributor** or your local service representative and ask for a UPS technical representative. Please have the following information ready when you call for service:

- Model number
- Serial number
- Firmware version number
- Date of failure or problem
- Symptoms of failure or problem
- Customer return address and contact information

If repair is required, you will be given a Returned Material Authorization (RMA) number. This number must appear on the outside of the package and on the Bill Of Lading (if applicable). Use the original packaging or request packaging from the Help Desk or distributor. Units damaged in shipment as a result of improper packaging are not covered under warranty. A replacement or repair unit will be shipped, freight prepaid for all warrantied units.

IMPORTANT

For critical applications, immediate replacement may be available. Call the Help Desk for the dealer or distributor nearest you.

7.4 CE Compliance Contact

- Eaton I.F. SAS - 110 Rue Blaise Pascal - 38330 Montbonnot St Martin – France.

Chapter 8 Specifications

8.1 Model Specifications

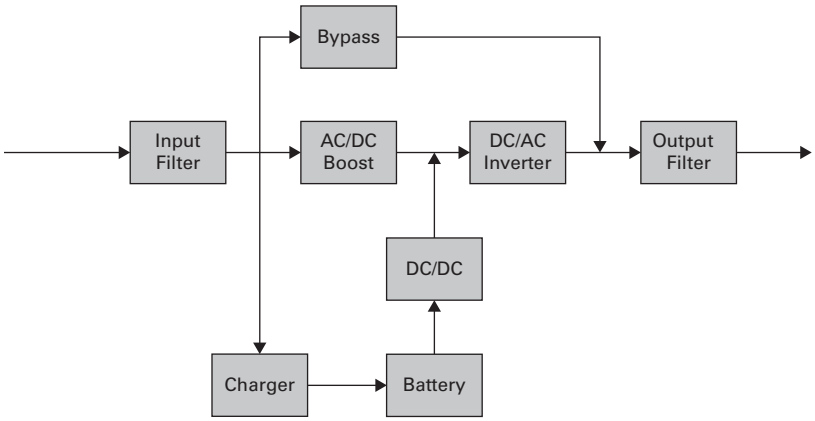

Table 7. Power Module List

Model	Power ratings
9PX1500RT-L	1500VA / 1350W
9PX2000RT-L	2000VA / 1800W
9PX3000RT-L	3000VA / 2700W
9PX1500GRT-L	1500VA / 1350W
9PX2200GRT-L	2200VA / 2000W
9PX3000GRT-L	3000VA / 2700W

Table 8. Extended Battery Module List

Model	Configuration	Battery Voltage	For Power Module
9PXEBM48RT-L	Rack / Tower	48Vdc	1500VA
9PXEBM72RT-L	Rack / Tower	72Vdc	2000 – 2200 – 3000VA

Table 9. Weights and Dimensions

Model	Dimensions D x W x H(inch/mm)	Weight (lb / kg)
9PX1500RT-L	17.7 x 17.3 x 3.4 / 450 x 440 x 86.5	35.5 / 16.2
9PX2000RT-L	23.8 x 17.3 x 3.4 / 605 x 440 x 86.5	50.6 / 23.0
9PX3000RT-L	23.8 x 17.3 x 3.4 / 605 x 440 x 86.5	52.7 / 24.0
9PX1500GRT-L	17.7 x 17.3 x 3.4 / 450 x 440 x 86.5	34.8 / 15.8
9PX2200GRT-L	23.8 x 17.3 x 3.4 / 605 x 440 x 86.5	48.6 / 22.1
9PX3000GRT-L	23.8 x 17.3 x 3.4 / 605 x 440 x 86.5	50.2 / 22.8

Table 9. Weights and Dimensions (Continued)

Model	Dimensions D x W x H(inch/mm)	Weight (lb / kg)
9PXEBM48RT-L	17.6 x 17.2 x 1.7 / 448 x 438 x 42.9	36.5 / 16.6
9PXEBM72RT-L	23.7 x 17.2 x 1.7 / 603 x 438 x 42.9	46.6 / 21.2

Table 10. Electrical Input

Model	Default Input (Voltage/Max Current)	Input Nominal Voltages	Input Voltage Window at Rated Load
9PX1500RT-L	120V / 12.5A	100V, 110V, 120V, 125V	100–138V
9PX2000RT-L	120V / 16A		
9PX3000RT-L	120V / 24A		
9PX1500GRT-L	208V / 7.2A	200V, 208V, 220V, 230V, 240V	176V-276V
9PX2200GRT-L	208V / 10.57A		
9PX3000GRT-L	208V / 14.42A		
Nominal Frequency		50/60Hz auto-sensing	
Frequency Range		40-70Hz before transfer to battery	
Bypass Voltage Range		-20% / +15% of nominal value (default)	
Noise Filtering		Input EMC filter	

Table 11. Electrical Input Connections

Model	Input Connection	Input cable
9PX1500RT-L	5–15P	8ft / 2.4m
9PX2000RT-L	5–20P	8ft / 2.4m
9PX3000RT-L	L5–30P	8ft / 2.4m
9PX1500GRT-L	IEC-C14, IEC 10A	6ft / 1.8m
9PX2200GRT-L	IEC-C20, 16 A inlet L6-20P to C19 jumper provided	6ft / 1.8m
9PX3000GRT-L		

Table 12. Electrical Output

All Models	Normal Mode	Efficiency Mode	Battery Mode
Voltage Regulation	±1%		±2%
Efficiency	90.0% for 1.5K LV models 91% for 1.5K G models 91.4% for 2K LV models 93% for 2K G models 94% for 3K G models	95.8% for 1K5 LV models 96.5% for 1.5K G models 96.8% for 2K LV models 98% for 2K G models 97.2% for 3K LV models 98% for 3K G models	84% for 1.5K LV models 87.5% for 1.5K G models 86% for 2K LV models 90% fo r 2K G models 86% for 3K LV models 89% for 3K G models

Table 12. Electrical Output (Continued)

All Models	Normal Mode	Efficiency Mode	Battery Mode
Frequency Regulation	Sync with line ±5% of nominal line frequency (outside this range: ±0.5% of auto-selected nominal frequency)		±0.5% of auto-selected nominal frequency
Nominal Output	[100V] [110V] [120V] [125V] [200V] [208V] [220V] [230V] [240V] (G models)		
Frequency	50 or 60 Hz, autosensing or configurable as a frequency converter		
Output Overload	Online mode: 102%~130% :12s 130%~150% :2s >150% :shutdown after 300ms Percent is based on nominal Watt/VA. Transfer behavior can change (see output mode setting on page 14) Battery mode: 102%~130% :12s >130% :2s Overload warning then transfer to stop output		
Output Overload (Bypass Mode)	102%~110% :Overload warning 110%~130% :shutdown after 5mins 130%~150% :shutdown after 15s >150% :shutdown after 300ms Percent is based on nominal current in bypass mode		
Voltage Waveform	Sinewave		
Harmonic Distortion	< 3% THDV on linear load < 5% THDV on non-linear load		
Transfer Time	Online Mode: 0ms High Efficiency mode: 10ms maximum (due to loss of utility)		
Power Factor	Up to 1.0		
Load Crest Ratio	Up to 3:1		

Table 13. Electrical Output Connections

Model	Output Connection	Output Cable
9PX1500RT-L	5-15R (8)	No
9PX2000RT-L	5-20R(2) + L5-20R(1) 5-20R(2) Group1 5-20R(2) Group2	No
9PX3000RT-L	5-20R(2) + L5-30R(1) 5-20R(2) Group1 5-20R(2) Group2	No
9PX1500GRT-L	(4) IEC10A (2) IEC10A (2) IEC10A (2) IEC 10A	No

Table 13. Electrical Output Connections (Continued)

Model	Output Connection	Output Cable
9PX2200GRT-L	(4) IEC10A + (1) IEC16A (2) IEC10A + (1) IEC16A group 1 (2) IEC10A group 2	(2) IEC 10A
9PX3000GRT-L		

Table 14. Environmental and Safety

Certifications	IEC/EN 62040-1 IEC/EN 62040-2 : Cat. C1 IEC/EN 62040-3 UL1778 5th edition CSA 22.2
EMC (Emissions)*	CISPR22 Class B FCC part 15 Class B / ICES-003
EMC (Immunity)*	IEC 61000-4-2, (ESD): 8 kV Contact Discharge / 15 kV Air Discharge IEC 61000-4-3, (Radiated field): 10 V/m IEC 61000-4-4, (EFT): Power (Coupling network) 4 kV / Ethernet (Coupling clamp) 2 kV IEC 61000-4-5, (Surges): 2 kV Differentiel Mode / 4 kV Common Mode / 1 kV Ethernet IEC 61000-4-6, (Electromagnetic field): 10 V IEC 61000-4-8, (Conducted magnetic field): 30 A/m
* for output cable < 10m.	
Agency Markings*	cULus / NOM / Energy Star / BSMI
Operating Temperatures	0 to 40°C (32 to 104°F) in Online mode, with linear derating for altitude **Note:** thermal protection switches load to Bypass in case of overheating.
Storage Temperatures	0 to 40°C (32 to 104°F) with batteries -25 to 55°C (-13 to 130°F) without batteries
Transit Temperature	-25 to 55°C (-13 to 130°F)
Relative Humidity	0 to 96% no condensing
Operating Altitude	Up to 3,000 meters (9,843 ft) above sea level, no derating for 35°c (95°F) room temperature
Transit Altitude	Up to 10,000 meters (32,808 ft) above sea level
Audible Noise	< 47 dBA at 1 meter typical for 2K et 3K models < 40 dBA at 1 meter typical for 70, 1K et 1K5 models
***** 9PX1500RT-L, 9PX2000RT-L, 9PX3000RT-L, 9PX1500GRT-L, 9PX2200GRT-L, 9PX3000GRT-L have cULus/Energy Star/ BSMI. 9PXEBM48RT-L, 9PXEBM72RT-L have cULus / NOM.	

Table 15. Battery

	Internal Batteries	EBM
Rack / Tower configuration	1500VA: 48Vdc 2200VA: 72Vdc 3000VA: 72Vdc	9PXEBM48RT: 48Vdc 9PXEBM72RT: 72Vdc
Type	Lithium Iron Phosphate (LFP) battery module Lithium-Ion float service life 8 years /25°C	
Monitoring	Integrated battery management system (BMS) for temperature regulation and life cycle monitoring.	
EBM Battery Cable Length	350 mm / 13.78 in	

P-164001006 08