USER INSTRUCTION

OVENS

EN 02

Candy Hoover Group S.R.L. • Via Comolli 16 • 20861 Brugherio (MB) Italy

• During cooking, moisture may condense inside the oven cavity or on the glass of the door. This is a normal condition. To reduce this effect, wait 10-15 minutes after turning on the power before putting food inside the oven. In any case, the condensation disappears when the oven reaches the cooking temperature.
• Cook the vegetables in a container with a lid instead of an open tray.
• Avoid leaving food inside the oven after cooking for more than 15/20 minutes.
• WARNING: the appliance and accessible parts become hot during use. Be careful not to touch any hot parts.
• WARNING: the accessible parts can become hot when the grill is in use. Children should be kept at a safe distance.
• WARNING: ensure that the appliance is switched off before replacing the bulb, to avoid the possibility of electric shocks.
• WARNING: in order to avoid any danger caused by the accidental resetting of the thermal interruption device, the appliance should not be powered by an external switching device, such as a timer, or be connected to a circuit that is regularly switched on and off.
• Children under 8 should be kept at a safe distance from the appliance if not continuously supervised.
• Children should not play with the appliance.
• The appliance can be used by those aged 8 or over and by those with limited physical, sensorial or mental capacities, without experience or knowledge of the product, only if supervised or provided with instruction as to the operation of the appliance, in a safe way with awareness of the possible risks.
• Cleaning and maintenance should not be carried out by unsupervised children.
• Do not use rough or abrasive materials or sharp metal scrapers to clean the oven door glasses, as they can scratch the surface and cause the glass to shatter.
• The oven must be switched off before removing the removable parts. After cleaning, reassemble them according the instructions.

• Only use the meat probe recommended for this oven.
• Do not use a steam cleaner for cleaning operations.
• Connect a plug to the supply cable that is able to bear the voltage, current and load indicated on the tag and having the earth contact. The socket must be suitable for the load indicated on the tag and must have ground contact connected and in operation. The earth conductor is yellow-green in colour. This operation should be carried out by a suitably qualified professional. In case of incompatibility between the socket and the appliance plug, ask a qualified electrician to substitute the socket with another suitable type. The plug and the socket must be conformed to the current norms of the installation country. Connection to the power source can also be made by placing an omnipolar breaker between the appliance and the power source that can bear the maximum connected load and that is in line with current legislation. The yellow-green earth cable should not be interrupted by the breaker. The socket or omnipolar breaker used for the connection should be easily accessible when the appliance is installed.
• The disconnection may be achieved by having the plug accessible or by incorporating a switch in the fixed wiring in accordance with the wiring rules.
• If the power cable is damaged, it should be substituted with a cable or special bundle available from the manufacturer or by contacting the customer service department. The type of power cable must be H05V2V2-F. This operation should be carried out by a suitably qualified professional. The earth conductor (yellow-green) must be approximately 10 mm longer than the other conductors. For any repairs, refer only to the Customer Care Department and request the use of original spare parts.
• Failure to comply with the above can compromise the safety of the appliance and invalidate the guarantee.
• Any excess of spilled material should be removed before cleaning.
• A long power supply failure during an occurring cooking phase may

cause a malfunction of the monitor. In this case contact customer service.

• The appliance must not be installed behind a decorative door in order to avoid overheating.

• When you place the shelf inside, make sure that the stop is directed upwards and in the back of the cavity. The shelf must be inserted completely into the cavity.

• WARNING: Do not line the oven walls with aluminium foil or single-use protection available from stores. Aluminium foil or any other protection, in direct contact with the hot enamel, risk melting and deteriorating the enamel of the insides.

• WARNING: Never remove the oven door seal.

• CAUTION: Do not refill the cavity bottom with water during cooking or when the oven is hot.

• No additional operation/setting is required in order to operate the appliance at the rated frequencies.

Summary

General Instructions 6
- 1.1 Safety indications
- 1.2 Electrical safety
- 1.3 Recommendations
- 1.4 Installation
- 1.5 Waste management

Product Description 8
- 2.1 Overview
- 2.2 Accessories
- 2.3 First use

Use of the Oven 9
- 3.1 Display description
- 3.2 Cooking modes

Oven Cleaning and Maintenance 12
- 4.1 General notes on cleaning
- 4.2 Maintenance
  - Removal and cleaning of grills
  - Removal of the oven window
  - Removal and cleaning of the glass door
  - Changing the bulb

Troubleshooting 14
- 5.1 F.A.Q.

Installation 15
- 6.1 For Equepped With Fixing Squares

1. General Instructions



We thank you for choosing one of our products. For the best results with your oven, you should read this manual carefully and retain it for future reference. Before installing the oven, take note of the serial number so that you can give it to customer service staff if any repairs are required. Having removed the oven from its packaging, check that it has not been damaged during transportation. If you have doubts, do not use the oven and refer to a qualified technician for advice. Keep all of the packaging material (plastic bags, polystyrene, nails) out of the reach of children. When the oven is switched on for the first time, strong smelling smoke can develop, which is caused by the glue on the insulation panels surrounding the oven heating for the first time. This is absolutely normal and, if it occurs, you should wait for the smoke to dissipate before putting food in the oven. The manufacturer accepts no responsibility in cases where the instructions contained in this document are not observed.

NOTE: the oven functions, properties and accessories cited in this manual will vary, depending on the model you have purchased.

1.1 Safety Indications

Only use the oven for its intended purpose, that is only for the cooking of foods; any other use, for example as a heat source, is considered improper and therefore dangerous. The manufacturer cannot be held responsible for any damage resulting from improper, incorrect or unreasonable usage.

The use of any electrical appliance implies the observance of some fundamental rules:

- do not pull on the power cable to disconnect the plug from the socket;
- do not touch the appliance with wet or damp hands or feet;
- in general the use of adaptors, multiple sockets and extension cables is not recommended;
- in case of malfunction and/or poor operation, switch off the appliance and do not tamper with it.

1.2 Electrical Safety

ENSURE THAT AN ELECTRICIAN OR QUALIFIED TECHNICIAN MAKES THE ELECTRICAL CONNECTIONS.

The power supply to which the oven is connected must conform with the laws in force in the country of installation. The manufacturer accepts no responsibility for any damage caused by the failure to observe these instructions. The oven must be connected to an electrical supply with an earthed wall outlet or a disconnector with multiple poles, depending on the laws in force in the country of installation. The electrical supply should be protected with suitable fuses and the cables used must have a transverse section that can ensure correct supply to the oven.

CONNECTION

The Appliance should only be connected via a suitable cable, to an electrical supply with 220-240V AC power between phases or between the phase and neutral.

Before the oven is connected to the electrical supply, it is important to check:

- Oven Max output on the rating plate.
- Correctly rated circuit breaker/fuse.

The grounding wire connected to the ovens earth terminal must be connected to the earth terminal of the power supply.

WARNING

Before connecting the oven to the power supply, ask a qualified electrician to check the continuity of the power supply's earth terminal. The manufacturer accepts no responsibility for any accidents or other problems caused by failure to connect the oven to the earth terminal or by an earth connection that has defective continuity.

NOTE: as the oven could require maintenance work, it is advisable to keep another wall socket available so that the oven can be connected to this if it is removed from the space in which it is installed. The power cable must only be substituted by technical service staff or by technicians with equivalent qualifications.

1.3 Recommendations

After each use of the oven, a minimum of cleaning will help keep the oven perfectly clean.

Do not line the oven walls with aluminium foil or single-use protection available from stores. Aluminium foil or any other protection, in direct contact with the hot enamel, risks melting and deteriorating the enamel of the insides. In order to prevent excessive dirtying of your oven and the resulting strong smokey smells, we recommend not using the oven at very high temperature. It is better to extend the cooking time and lower the temperature a little. In addition to the accessories supplied with the oven, we advise you only use dishes and baking moulds resistant to very high temperatures.

1.4 Installation

The manufacturers have no obligation to carry this out. If the assistance of the manufacturer is required to rectify faults arising from incorrect installation, this assistance is not covered by the guarantee. The installation instructions for professionally qualified personnel must be followed. Incorrect installation may cause harm or injury to people, animals or belongings. The manufacturer cannot be held responsible for such harm or injury.

The oven can be located high in a column or under a worktop. Before fixing, you must ensure good ventilation in the oven space to allow proper circulation of the fresh air required for cooling and protecting the internal parts. Make the openings specified on last page according to the type of fitting.

1.5 Waste management and environmental protection



This appliance is labelled in accordance with European Directive 2012/19/EU regarding electric and electronic appliances (WEEE). The WEEE contain both polluting substances (that can have a negative effect on the environment) and base elements (that can be reused). It is important that the WEEE undergo specific treatments to correctly remove and dispose of the pollutants and recover all the materials. Individuals can play an important role in ensuring that the WEEE do not become an environmental problem; it is essential to follow a few basic rules:

- the WEEE should not be treated as domestic waste;
- the WEEE should be taken to dedicated collection areas managed by the town council or a registered company.

In many countries, domestic collections may be available for large WEEEs. When you buy a new appliance, the old one can be returned to the vendor who must accept it free of charge as a one-off, as long as the appliance is of an equivalent type and has the same functions as the purchased appliance.

SAVING AND RESPECTING THE ENVIRONMENT

Where possible, avoid pre-heating the oven and always try to fill it. Open the oven door as infrequently as possible, because heat from the cavity disperses every time it is opened. For a significant energy saving, switch off the oven between 5 and 10 minutes before the planned end of the cooking time, and use the residual heat that the oven continues to generate. Keep the seals clean and in order, to avoid any heat dispersal outside of the cavity. If you have an electric contract with an hourly tariff, the "delayed cooking" programme makes energy saving more simple, moving the cooking process to start at the reduced tariff time slot.

2. Product Description

2.1 Overview



1. Control panel
2. Shelf positions
(lateral wire grid if included)
3. Metal grill
4. Drip pan
5. Fan (behind the steel plate)
6. Oven door

2.2 Accessories

1 Metal grill

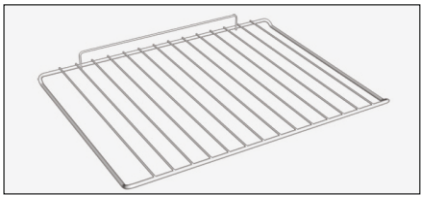

Holds baking trays and plates.

2 Drip tray

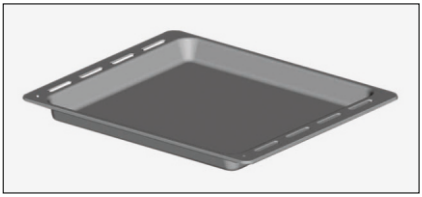

Collects the residues that drip during the cooking of foods on the grills.

3 Lateral wire grids

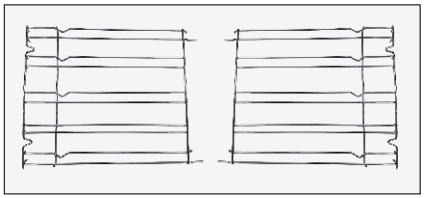

It located at both sides of the oven cavity.
It holds metal grills and drip pans.

4 Grill pan set

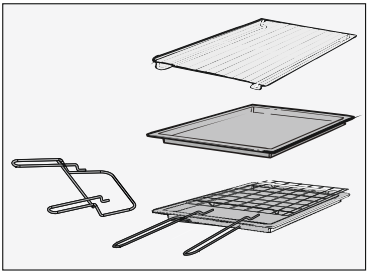

The simple shelf can take moulds and dishes.
The tray holder shelf is especially good for grilling things.
Use it with the drip tray.

The special profile of the shelves means they stay horizontal even when pulled right out. There is no risk of a dish sliding or spilling.
The drip tray catches the juices from grilled foods. It is only used with the Grill, Rotisserie, or Fan Assisted Grill ; remove it from the oven for other cooking methods.

Never use the drip tray as a roasting tray as this creates smoke and fat will spatter your oven making it dirty.

The tray holder
The tray holder shelf is ideal for grilling. Use it in conjunction with the drip tray. A handle is included to assist in moving the both accessories safely. Do no leave the handle inside the oven.

2.3 First Use

PRELIMINARY CLEANING
Clean the oven before using for the first time. Wipe over external surfaces with a damp soft cloth. Wash all accessories and wipe inside the oven with a solution of hot water and washing up liquid. Set the empty oven to the maximum temperature and leave on for about 1 hour, this will remove any lingering smells of newness.

3. Use of the Oven

3.1 Display description

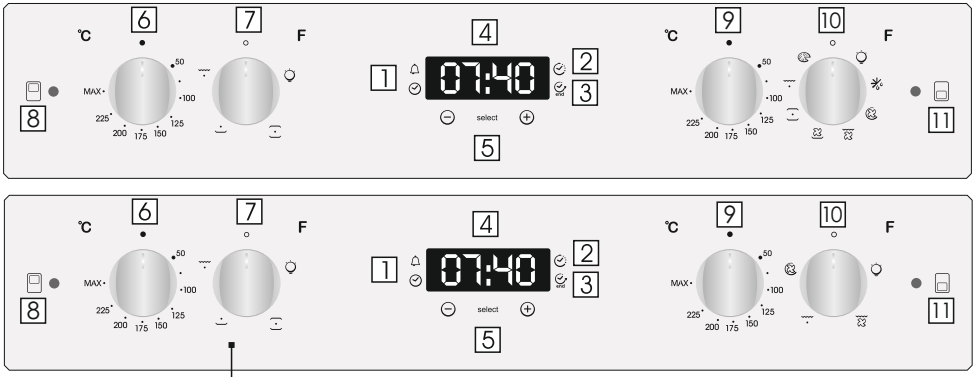

1. Timer
2. Cooking time
3. End of cooking
4. Timer display
5. LCD display adjustment controls
6. Thermostat knob (upper cavity)
7. Function selector knob (upper cavity)
8. Upper cavity signal lamp
9. Thermostat knob (lower cavity)
10. Function selector knob (lower cavity)
11. Lower cavity signal lamp

WARNING!
The first operation to carry out after the oven has been installed or following the interruption of power supply (this is recognizable the display pulsating and showing 12:00) is setting the correct time. This is achieved as follows.

- Push the central button 4 times
- Set time with "-" "+" buttons.
- Release all buttons.

ATTENTION: The oven will only operate providing the clock is set.

FUNCTION	HOW TO ACTIVATE	HOW TO SWITCH IT OFF	WHAT IT DOES	WHAT IT IS FOR
KEY LOCK	•Child Lock function is activated by touching Set (+) for a minimum of 5 seconds. From this moment on all other function are locked and the display will flash STOP and preset time intermittently.	•Child Lock function is deactivated by touching touchpad Set (+) again for a minimum of 5 seconds. From this moment on all functions are selectable again.		
MINUTE MINDER 	•Push the central button 1 times •Press the buttons "-" "+" to set the required time •Release all the buttons	•When the set time as elapsed an audible alarm is activated (this alarm will stop on its own, however it can be stopped immediately by pressing the button) SELECT.	•Sounds an alarm at the end of the set time. •During the process, the display shows the remaining time.	•Allows to use the oven as alarm clock (could be activated either with operating the oven or with out operating the oven)
COOKING TIME 	• Push the central button 2 times • Press the buttons "-" or "+"to set the lenght of cooking required • Release all buttons • Set the cooking function with the oven function selector.	•When the time is elapsed the oven will switch off automatically. Should you wish to stop cooking earlier either turn the function selector to 0, or set time to 0:00 (SELECT and "-" "+" buttons)	• It allows to preset the cooking time required for the recipe chosen. • To check how long is left to run press the SELECT button 2 Times. • To alter/change the preset time press SELECT and "-" "+" buttons.	•Push any button to stop the signal. Push the central button to return to the clock function.
END OF COOKING 	•Push the central button 3 times •Press the buttons "-" "+" to set the time at which you wish the oven to switch off. •Release the buttons •Set the cooking function with the oven function selector.	•At the time set, the oven will switch off. To switch off manually, turn the oven function selector to position O.	•Enables you to set the end of cooking time. •To check the preset time push the central button 3 times. •To modify the preset time press buttons SELECT + "-" "+"	•This function is typically used with “cooking time” function. For example if the dish has to be cooked for 45 minutes and needs to be ready by 12:30, simply select the required function, set the cooking time to 45 minutes and the end of cooking time to 12:30. •At the end of the cooking set time, the oven will switch off automatically and an audible alarm will ring. •Cooking will start automatically at 11:45 (12:30 minus 45 mins) and will continue until the pre-set end-of-cooking-time, when the oven will switch itself off automatically. WARNING. If the END of cooking is selected without setting the length of cooking time, the oven will start cooking immediately and it will stop at the END of cooking time set.

3.2 Cooking Modes

Function Dial	T °C Suggested	T °C range	Function (Depends on the oven model)
			**LAMP:** Turns on the oven light.
			**DEFROST:** When the dial is set to this position. The fan circulates air at room temperature around the frozen food so that it defrosts in a few minutes without the protein content of the food being changed or altered.
 	180 210	50 ÷ MAX 50 ÷ MAX	**MULTI-LEVEL:** We recommend you use this method for poultry, pastries, fish and vegetables. Heat penetrates into the food better and both the cooking and preheating times are reduced. You can cook different foods at the same time with or without the same preparation in one or more positions. This cooking method gives even heat distribution and the smells are not mixed. Allow about ten minutes extra when cooking foods at the same time.
* 	220	50 ÷ MAX	**CONVENTIONAL:** Both top and bottom heating elements are used. Preheat the oven for about ten minutes. This method is ideal for all traditional roasting and baking. For seizing red meats, roast beef, leg of lamb, game, bread, foil wrapped food (papillotes), flaky pastry. Place the food and its dish on a shelf in mid position.
	210	50 ÷ MAX	**BOTTOM HEATING + FAN:** The bottom heating element is used with the fan circulating the air inside the oven. This method is ideal for juicy fruit flans, tarts, quiches and pâté. It prevents food from drying and encourages rising in cakes, bread dough and other bottom-cooked food. Place the shelf in the bottom position.
* 	200	50 ÷ MAX	**FAN ASSISTED GRILL :** use the turbo-grill with the door closed. The top heating element is used with the fan circulating the air inside the oven. Preheating is necessary for red meats but not for white meats. Ideal for cooking thick food items, whole pieces such as roast pork, poultry, etc. Place the food to be grilled directly on the shelf centrally, at the middle level. Slide the drip tray under the shelf to collect the juices. Make sure that the food is not too close to the grill. Turn the food over halfway through cooking.
	230	50 ÷ MAX	**GRILL :** use the grill with the door closed. The top heating element is used alone and you can adjust the temperature. Five minutes preheating is required to get the elements red-hot. Success is guaranteed for grills, kebabs and gratin dishes. White meats should be put at a distance from the grill; the cooking time is longer, but the meat will be tastier. You can put red meats and fish fillets on the shelf with the drip tray underneath. The oven has two grill positions: Grill: 2140 W
	220	50 ÷ MAX	**PIZZA:** this function with hot air circulated in the oven ensure perfect result for dishes such as pizza or focaccia.

* Tested in accordance with the EN 60350-1 for the purpose of energy consumption declaration and energy class

4. Oven cleaning and maintenance

4.1 General notes on cleaning

The lifecycle of the appliance can be extended through regular cleaning. Wait for the oven to cool before carrying out manual cleaning operations. Never use abrasive detergents, steel wool or sharp objects for cleaning, so as to not irreparably damage the enamelled parts. Use only water, soap or bleach-based detergents (ammonia).

GLASS PARTS

It is advisable to clean the glass window with absorbent kitchen towel after every use of the oven. To remove more obstinate stains, you can use a detergent-soaked sponge, well wrung out, and then rinse with water.

OVEN WINDOW SEAL

If dirty, the seal can be cleaned with a slightly damp sponge.

ACCESSORIES

Clean accessories with a wet, soapy sponge before rinsing and drying them: avoid using abrasive detergents.

DRIP PAN

After using the grill, remove the pan from the oven. Pour the hot fat into a container and wash the pan in hot water, using a sponge and washing-up liquid.

If greasy residues remain, immerse the pan in water and detergent. Alternatively, you can wash the pan in the dishwasher or use a commercial oven detergent. Never put a dirty pan back into the oven.

4.2 Maintenance

INSTRUCTION FOR REMOVAL AND CLEANING OF THE SIDE RACKS

1. Remove the wire racks by pulling them in the direction of the arrows (see below)
2. To clean the wire racks either put them in the dishwasher or use a wet sponge, ensuring that they are dried afterwards.
3. After the cleaning process install the wire racks in reverse order.

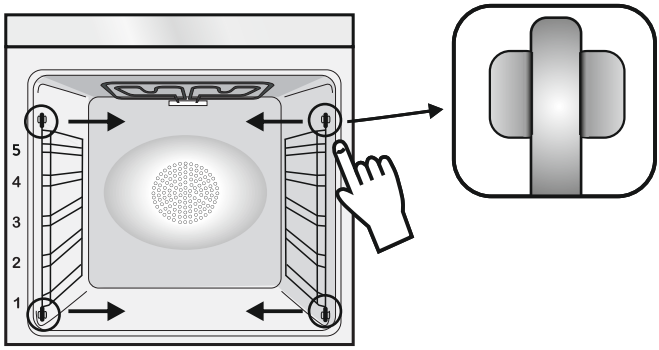

REMOVAL OF THE OVEN WINDOW

1. Open the front window.
2. Open the clamps of the hinge housing on the right and left side of the front window by pushing them downwards.
3. Replace the window by carrying out the procedure in reverse.

REMOVAL AND CLEANING OF THE GLASS DOOR

1. Open the oven door.

2.3.4. Lock the hinges, remove the screws and remove the upper metal cover by pulling it upwards.

5.6. Remove the glass, carefully extracting it from the oven door (NB: in pyrolytic ovens, also remove the second and third glass (if present)).

7. At the end of cleaning or substitution, reassemble the parts in reverse order.

On all glass, the indication "Pyro" must be legible and positioned on the left side of the door, close to the left-hand lateral hinge. In this way, the printed label of the first glass will be inside the door.

1.



2.

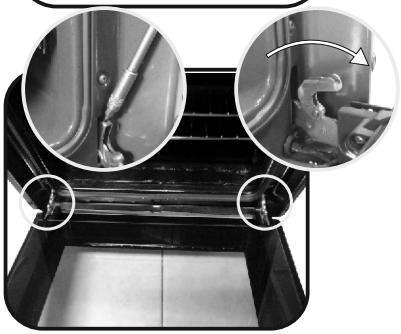

3.

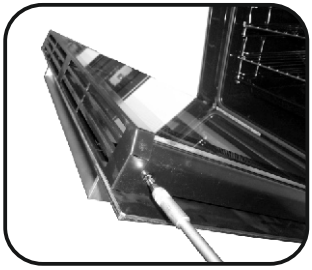

4.

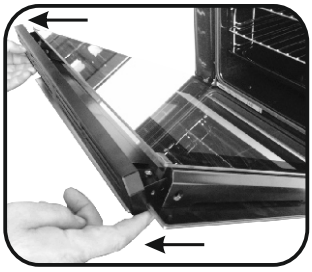

5.

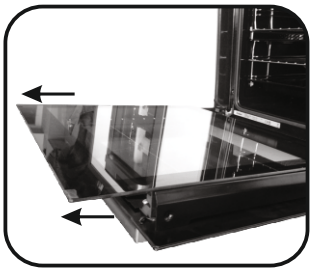

6.

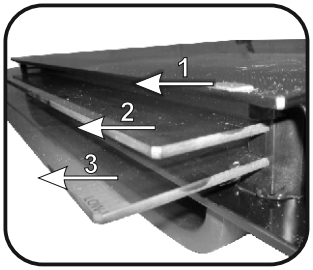

7.

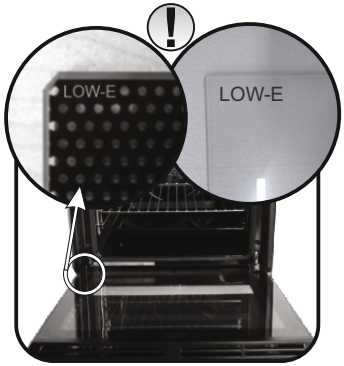

CHANGING THE BULB

1. Disconnect the oven from the mains supply.
2. Undo the glass cover, unscrew the bulb and replace it with a new bulb of the same type.
3. Once the defective bulb is replaced, replace the glass cover.



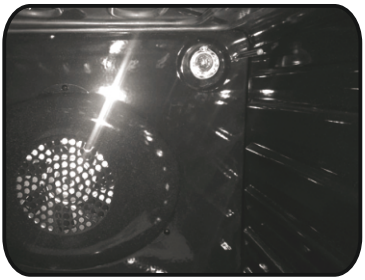
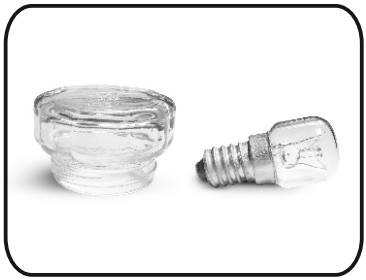

5. Troubleshooting

5.1 FAQ

PROBLEM	POSSIBLE CAUSE	SOLUTION
The oven does not heat up	The clock is not set	Set the clock
The oven does not heat up	The child lock is on	Deactivate the child lock
The oven does not heat up	A cooking function and temperature has not been set	Ensure that the necessary settings are correct

OVEN FITTED UNDER WORKTOP

• VENTILATION REQUIREMENTS MUST BE AS SPECIFIED BY THE DRAWING BELOW

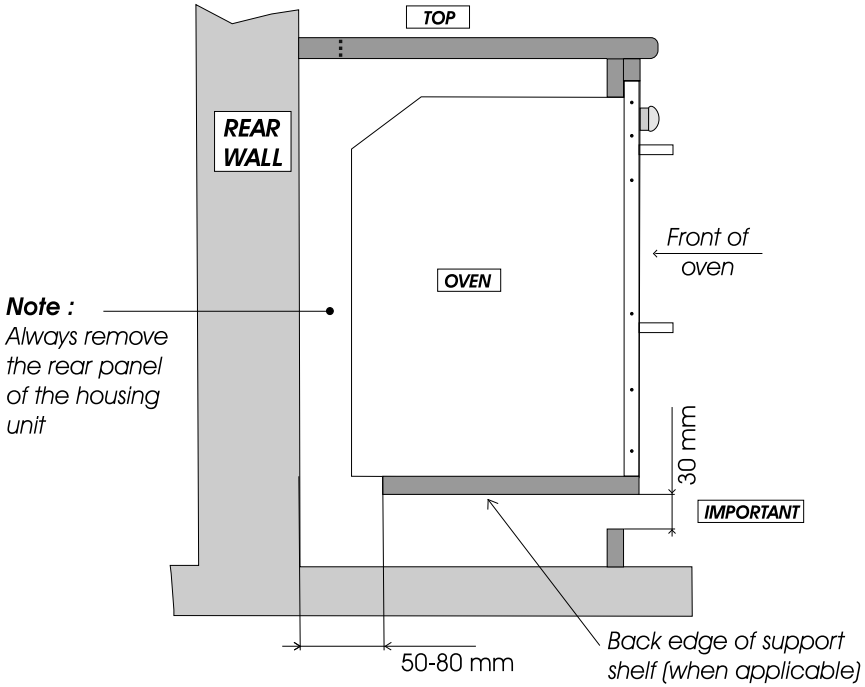

OVEN FITTED BETWEEN FURNITURES

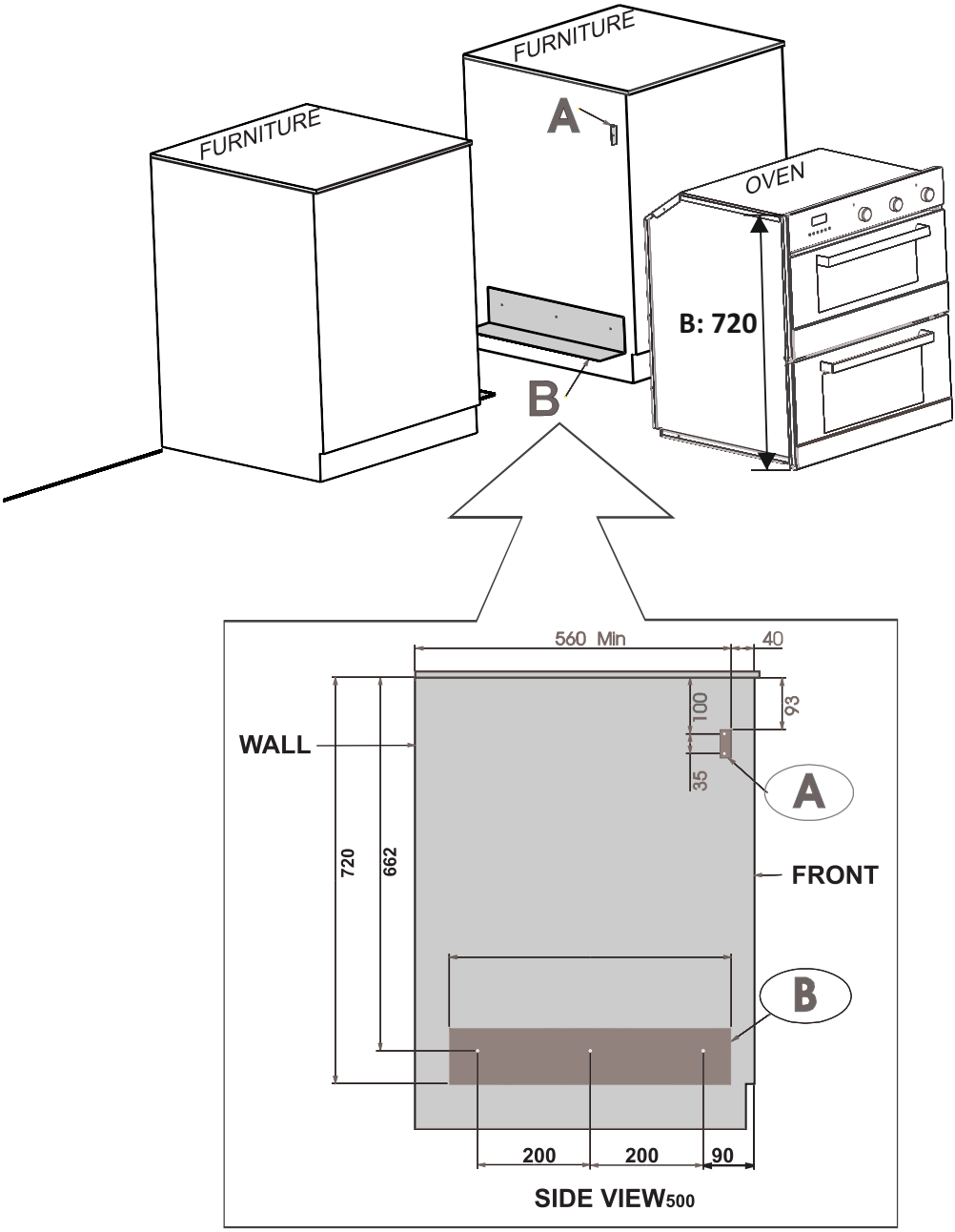

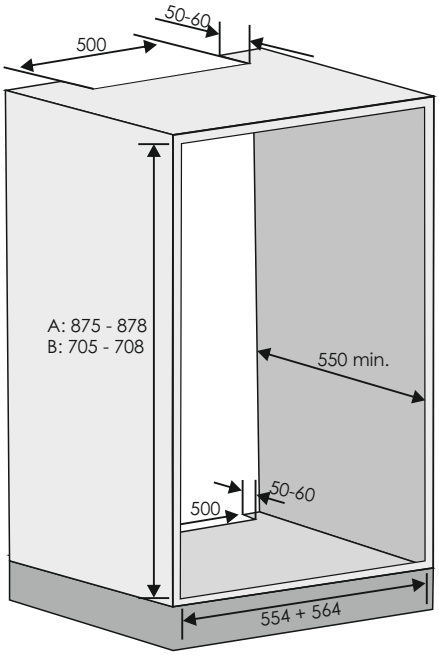

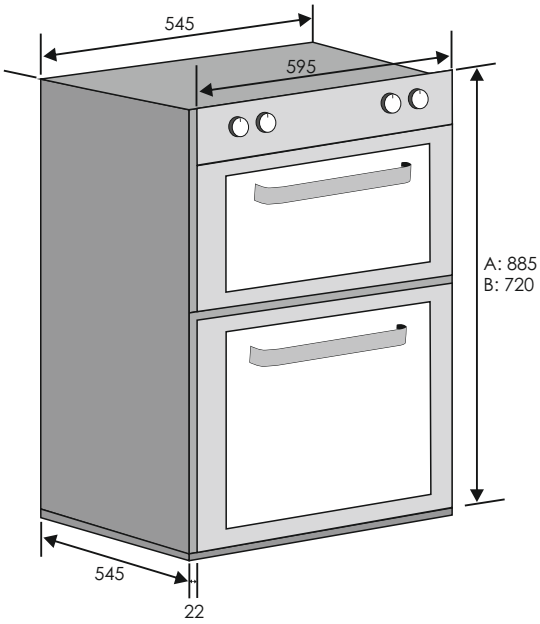

42835651 • 09.2021 • A5• REV.A

GB

The manufacturer will not be responsible for any inaccuracy resulting from printing or transcript errors contained in this brochure. We reserve the right to carry out modifications to products as required, including the interests of consumption, without prejudice to the characteristics relating to safety or function.