Original operating instructions

Beverage cooler

Read the operating instructions before switching on for the first time

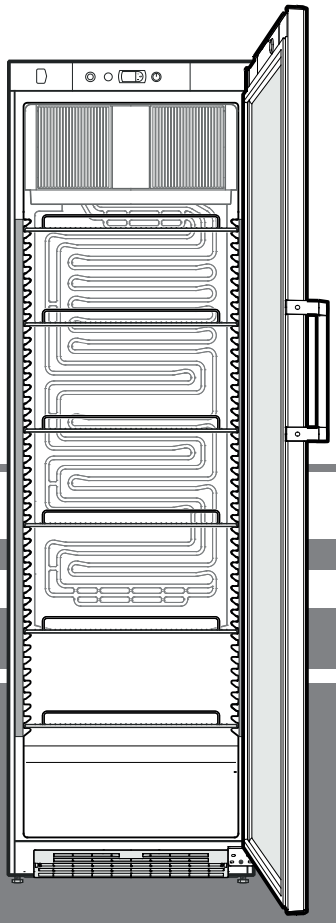

FKDv 4523

7085 834-02

LIEBHERR

Content

Priority of warnings 14
Safety instructions and warnings 14
Symbols on the appliance 15
Intended use 15
Foreseeable incorrect use 15
Declaration of conformity 15
EPREL database 15
Noise emissions from the appliance 15
Climate class 16
Description of the appliance 16
Levelling the appliance 16
Setting up 16
Electrical connection 17
Appliance dimensions 17
Operating and control elements 17
Switching the appliance on and off 17
Setting the temperature 17
Energy saving mode 18
Door open alarm 18
Temperature alarm 18
Setup mode 18
Interior light 19
Display light 19
Brightness control 19
for lighting 19
Safety lock 19
Cooling 19
Defrosting 19
Cleaning 19
Malfunctions 20
Shutting your appliance down 20
Disposal notes 20
Additional information: 20
Changing over door hinges 21

Priority of warnings

⚠ **DANGER**	identifies a situation involving direct danger which, if not obviated, may result in death or severe bodily injury.
⚠ **WARNING**	identifies a dangerous situation which, if not obviated, may result in death or severe bodily injury.
⚠ **CAUTION**	identifies a dangerous situation which, if not obviated, may result in minor or medium bodily injury.
NOTICE	identifies a dangerous situation which, if not obviated, may result in damage to property.
Note	identifies useful information and tips.

Safety instructions and warnings

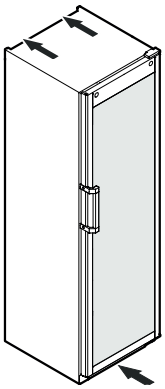

- **WARNING:** do not seal ventilation openings on the appliance housing or enclosure.
- **WARNING:** only use the mechanical devices or other aids recommended by the manufacturer to help speed up the defrosting process.
- **WARNING:** do not damage the refrigerant circuit.
- **WARNING:** do not use any electrical devices in the refrigerator compartment which do not comply with the design recommended by the manufacturer.
- **WARNING:** the mains cable must not be damaged while installing the appliance.
- **WARNING:** multi-sockets or distributor strips and other electronic devices (such as halogen transformers) must not be positioned and operated at the rear of appliances.
- **WARNING:** danger of injury through electric shock. There are live parts under the cover. Only have the interior LED light replaced or repaired by customer service staff or trained personnel.
- **WARNING:** risk of injury from the LED lamp. The light intensity of the LED light complies with laser class RG 2. If the cover is defective, do not look directly at the light through optical lenses from close distance. This may damage your eyes.
- **WARNING:** this appliance must be secured as described in the operating instructions to rule out any potential risks due to its instability.
- This appliance can be used by children of 8 years old and over, and also by persons with restricted physical, sensory or mental capacity or lack of experience and knowledge, if they are supervised or have been instructed on safe use of the appliance and understand the resulting risks. Children must not be allowed to play with the appliance. Cleaning and user maintenance must not be carried out by children without supervision.
- Do not store any explosive substances, such as aerosol containers with flammable propellant gas, inside the appliance.
- To prevent injury and damage to property, the appliance should only be installed by two people.
- After unpacking it, check the appliance for signs of damage. Contact the supplier if it is damaged. Do not connect the appliance to the mains power supply.

- Avoid prolonged skin contact with cold surfaces (e.g. chilled/frozen products). If necessary, take safety action (e.g. gloves).
- All repairs and work on the appliance may only be carried out by customer service personnel or other trained personnel. The same applies to changing the mains power cable.
- Only carry out repair and other work on the appliance when the mains plug has visibly been disconnected.
- Only install, connect and dispose of the appliance as described in these operating instructions.
- In the event of a fault, pull out the plug or switch off the fuse.
- When disconnecting the appliance from the mains, pull on the plug. Do not pull on the cable.
- Ensure that food which has been stored for too long is not consumed. Dispose of food which has been stored for too long properly.
- Do not use the interior LED light to light the room. The interior LED light is only designed to illuminate the interior of the appliance.
- Do not allow naked flames or ignition sources to enter the appliance.
- Alcoholic drinks or other vessels containing alcohol should be sealed tightly for storage.

Symbols on the appliance

	The symbol can be located on the compressor. It refers to the oil in the compressor and indicates the following danger: swallowing or inhaling can be fatal. This is only relevant for recycling. There is no danger in normal operation.
	Warning about inflammable substances.
	A sticker to this effect may be applied to the rear of the appliance. It refers to the foampadded panels in the door and/or the housing. This is only relevant for recycling. Do not remove the sticker.

Intended use

This professional refrigeration appliance is designed for storing, presentation and sale of chilled packed food and drink. It may be used for the presentation of packed food and drink in a commercial environment and in retail sales outlets. It is designed for the removal of chilled goods by customers.

The appliance is designed for use in enclosed rooms. All other types of use are not permitted.

Foreseeable incorrect use

Do not use the appliance for the following applications:

- Storage and cooling of medicines, blood plasma, laboratory preparations or similar substances and products subject to the Medical Devices Directive 2007/47/EC.
- Use in potentially explosive atmospheres.
- Use outdoors or in areas where it is exposed to splash water or damp conditions.

Incorrect use of the appliance will result in damaging or spoiling the goods stored in it.

Declaration of conformity

The refrigerant circuit has been tested for leaks. The appliance complies with the relevant safety regulations and EU Directives 2006/42/EG, 2014/30/EU, 2009/125/EG and 2011/65/EU.

EPREL database

As from 1 March 2021, information about energy labelling and ecodesign requirements will be available in the European product database (EPREL). You can access the product database using the following link: https://eprel.ec.europa.eu/. You will be asked to enter the model identifier. You will find the model identifier on the type plate.

Noise emissions from the appliance

The noise level while the appliance is operating is below 70 dB(A) (relative noise level 1 pW).

Climate class

The climate class [X] specifies the ambient conditions in which the appliance can be operated safely.

The climate class [Y] and temperature class [Z] define the maximum outline conditions in which the appliances will operate perfectly.

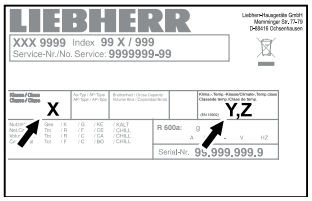

The climate rating is indicated on the type plate.

[X] Climate class	Max. room temperature	Max. relative humidity
3	25 °C	60 %
4	30 °C	55 %
5	40 °C	40 %
7	35 °C	75 %

The minimum room temperature at the place of installation is 10°C.

[Y] Climate class	Temperature [°C]	Relative humidity [%]
CC1	25,0	60
CC2	32,2	65
CC3	40,6	75

Recommended temperature setting:

[Z] Temperature class	Temperature setting [°C]
K1	3,5
K2	2,5
K3	-1,0
K4	+5,0

Description of the appliance

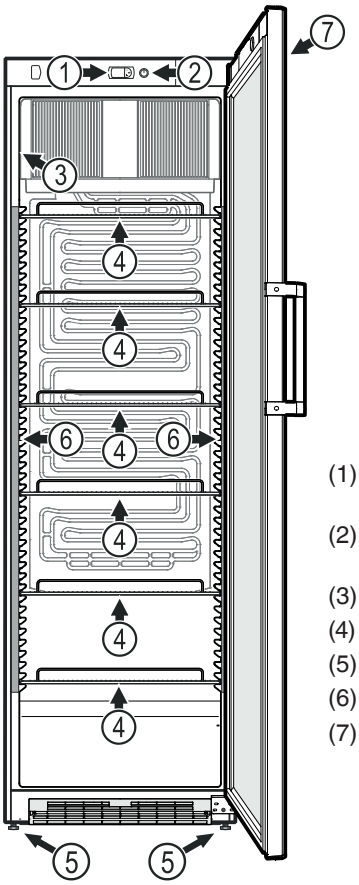

(1) Operating and control elements
(2) Brightness control for interior light
(3) Type plate
(4) Grid shelves
(5) Adjustable-height feet
(6) Interior light (LED light strip)
(7) Display light(LED light strip)

NOTICE

The maximum load per grid shelf is 45 kg.

Levelling the appliance

Compensate floor unevenness using the adjustable feet.

NOTICE

The appliance must be aligned horizontally and vertically. If the appliance is not level, the main body of the appliance can be deformed and the door will not close properly.

Setting up

- Do not place the appliance in direct sunlight or near cookers, radiators and similar sources of heat.
- The more coolant there is in the appliance, the larger the room in which the appliance is installed must be. If the room is too small, any leak may create a flammable mixture of gas and air. For each 8 g of coolant the installation space must be at least 1 m^3. Information on the coolant is on the model plate inside the appliance.
- Always install the appliance directly against the wall.
- If several appliances are installed next to each other, leave a gap of 3 cm between them.

  If this gap is too narrow, condensation forms between the side walls.

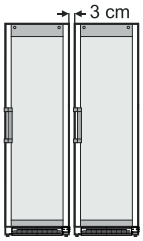

Electrical connection

Only operate the appliance with **alternating current (AC)**.

The permissible voltage and frequency are indicated on the type plate. The position of the type plate is shown in the section entitled **Description of the appliance**.

The socket must be properly earthed and protected by a fuse. The tripping current of the fuse must be between 10 A and 16 A.

The socket must not be situated behind the appliance and must be easily accessible.

Do not connect the appliance using an extension cable or extension socket.

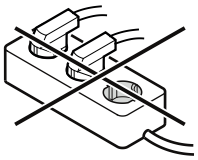

Do not use stand-alone inverters (conversion of direct current to alternating current/three-phase current) or energy-saving plugs. Risk of damage to the electronic control system!

Appliance dimensions

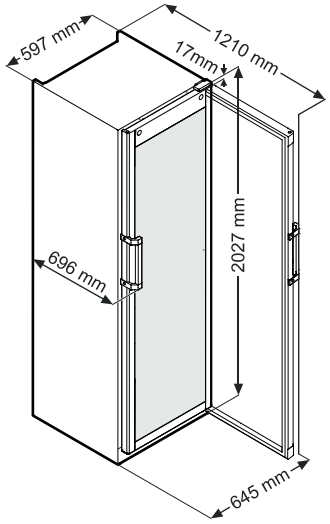

Remove transport lock

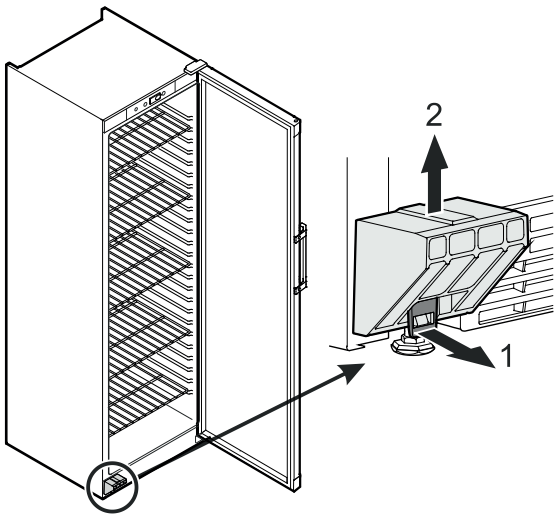

Operating and control elements



set **Set** button (Enter) or **audible warning** on/off button

ES Energy saving mode on/off button or
button to navigate in the menu and increase set values

Interior light on/off button or
button to navigate in the menu and decrease set values

Symbols in the display

Compressor is running

LED flashing - refrigeration unit switches on after a delay. The compressor will start automatically after the pressure in the refrigerant circuit has equalised.

Fan is running

Appliance is defrosting

Alarm function

Switching the appliance on and off

Switching the appliance on

Connect the appliance to the mains - the appliance is switched on.

Switching the appliance off

Pull out the mains plug.

Setting the temperature

- Press button set for 1 second. The temperature display flashes.
- To increase the temperature (warmer): press button ES.
- To reduce the temperature (colder): press button .
- Press button set again.

The desired temperature setting is saved.

Note

The temperature in the warmest area of the interior may be higher than the temperature setting.

If the door is left open for a lengthy period, the temperature in the appliance's compartments may rise dramatically.

Energy saving mode

If the appliance door is not opened for 2 hours, the appliance switches to energy saving mode. The interior light is switched off and the temperature inside the appliance increases slightly.

The appliance will switch back to normal operating mode after 8 hours. If the appliance door is opened during energy saving mode, the appliance will switch back to normal operating mode immediately.

The periods of time specified above can be changed. See section entitled **Setup mode**.

Activating energy saving mode manually

- Press button ▲ ES for 3 seconds.

Display = alternating display of ECO and the current temperature in the interior of the appliance.

Note

Close the appliance door within 10 seconds, otherwise energy saving mode will not be activated.

Deactivating energy saving mode manually

- Press button ▲ ES for 3 seconds. Display = noF

Door open alarm

When the door has been left open for more than 4 minutes, the LED lights up, and dOr and the temperature indication flash alternately in the display.

The audible warning signal sounds (unless the audible warning signal function has been deactivated).

If the door has to stay open for longer in order to insert items to be cooled, cancel the audible warning signal by pressing button set.

Temperature alarm

After a lengthy power failure, the temperature in the interior may have risen to too high a level.

LED on, the display reads HI

The audible warning signal sounds (unless the audible warning signal function has been deactivated).

After the power supply returns, the fall in temperature can be watched on the display.

- Cancel the audible warning signal by pressing button set.

Temperature alarm after a fault in the appliance

LED on, the display reads HI or LO

The interior is too warm (HI) or too cold (LO). The audible warning signal sounds (unless the audible warning signal function has been deactivated).

If the temperature displayed is too high (warm), first check whether the door is closed correctly.

If the temperature display continues to show a value that is too high or too low after one hour, contact the customer service department.

Setup mode

The parameters of the electronic control system can be changed in setup mode.

- Press button set for 5 seconds. Display = PS
- Press button ▲ ES . Display = St
- Press button ▲ ES . Display = r6
- Press button set.

Display = period of time (in hours) currently set after which energy saving mode is activated automatically.

- Use buttons ▼ or ▲ ES to select the desired setting.
- Press button set. Display = r6

- Press button ▲ ES. Display = r7
- Press button set.

Display = set duration (in hours) of energy saving mode.

- Use buttons ▼ or ▲ ES to select the desired setting.
- Press button set . Display = r7

- Press button ▲ ES . Display = A10
- Press button set.

Display = delay (in minutes) currently set after which the audible warning signal sounds if the door is open.

- Use buttons ▼ or ▲ ES to select the desired setting.
- Press button set. Display = A10

- Press button ▲ ES . Display = H4
- Press button set . Display = 0

0 = audible warning signal function activated

1 = audible warning signal function deactivated

- Use buttons ▼ or ▲ ES to select the desired setting.
- Press button set. Display = H4
- Press button set for 5 seconds.

The settings are saved.

Note

If the set button is not held down for 5 seconds, the electronic control system will switch back to normal operating mode after 60 seconds **without** saving the new settings.

Interior light
Display light

It can be switched on and off by pressing the switch ▼.

The light intensity of the LED light corresponds to laser class 1/1M.

⚠ **Important**

The light cover may only be removed by customer service staff. If the cover is removed, do not look directly at the light through optical lenses from close distance. This can damage your eyes.

Brightness control for lighting

Adjust the brightness of the light by turning the control shown.

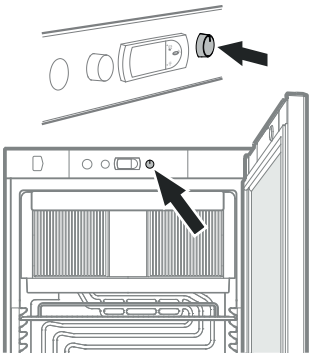

Safety lock

The lock in the appliance door is equipped with a safety mechanism.

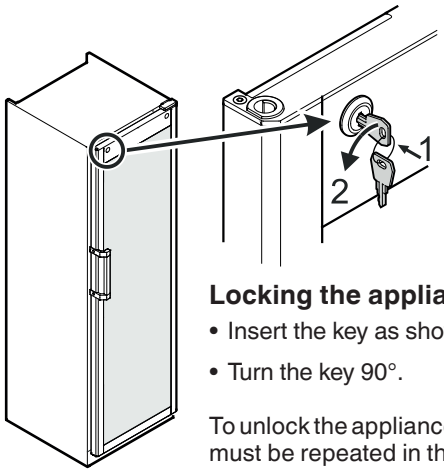

Locking the appliance

- Insert the key as shown by arrow **1**.
- Turn the key 90°.

To unlock the appliance, the same procedure must be repeated in the same order.

Cooling

The grid shelves can be moved to accommodate different height bottles or packages.

The ventilation slots on the inside must not be covered! →

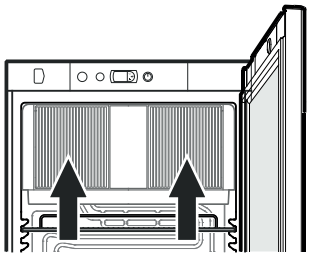

NOTICE

Store raw meat or fish in clean sealed containers on the bottom shelf of the refrigerator/freezer compartment so that it cannot come into contact with any other food or drip liquid onto it.

A failure to follow these instructions may result in the food being spoilt.

Defrosting

The refrigerator compartment defrosts automatically.

Cleaning

⚠ WARNING

Before cleaning, always disconnect the appliance from the mains. Pull out the plug or switch off the fuse.

⚠ CAUTION

Risk of damage to the appliance components and risk of injury due to hot steam.

Do not use steam cleaning equipment to clean the appliance.

NOTICE

Surfaces which may come into contact with food and accessible drain systems must be cleaned at regular intervals.

- Clean the inside, equipment parts and outer walls with lukewarm water and a little detergent. Do not use chemical solvents or any cleaning agents containing sand or acid.
- Ensure that no cleaning water penetrates into the electrical components or ventilation grille.
- Dry all parts well with a cloth.
- The dust should be removed from the refrigeration unit and heat exchanger - metal grid at the back of the appliance - once a year.
- Do not damage or remove the type plate on the inside of the appliance. It is very important for servicing purposes.

Malfunctions

You may be able to rectify the following faults by checking the possible causes yourself:

- **Appliance does not function:**

– Is the appliance switched on?
– Is the plug correctly fitted in the mains socket?
– Is the fuse intact?

- **The temperature is not low enough:**

– Is the temperature setting correct (see "Setting the temperature")?
– Does the separately installed thermometer show the correct reading?
– Is the ventilation system working properly?
– Is the appliance set up too close to a heat source?

If none of the above causes apply and you cannot rectify the fault yourself, contact the nearest customer service department stating the type designation ①, service number ② and appliance number ③ as indicated on the type plate.

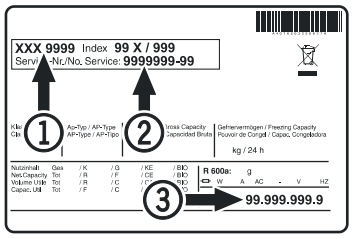

The position of the type plate is shown in the section entitled **Description of the appliance**.

Shutting your appliance down

If the appliance is left empty for a lengthy period, it must be switched off, defrosted, cleaned and dried and the door is to be left open to prevent mould formation.

The permissible room temperature for storing the appliance after decommissioning is between -10°C and +50°C.

Storing the appliance outside this temperature range can damage the appliance and cause it to malfunction.

Disposal notes



The appliance contains reusable materials and should be disposed of properly - not simply with unsorted household refuse. Appliances which are no longer needed must be disposed of in a professional and appropriate way, in accordance with the current local regulations and laws.

Do not damage the refrigerant circuit of an appliance that is no longer needed during its disposal.

This appliance contains inflammable gases in the refrigerant circuit and insulation foam.

Your local council or a waste disposal contractor can provide information about how to dispose of the appliance correctly.

Additional information:

- Food will remain fresh for longer if stored at the correct temperature. This can prevent having to discard food needlessly.

- If the condenser coil is not cleaned every year, it will significantly reduce the appliance's efficiency.

- The period during which spare parts, necessary for the repair of the refrigerating appliance with a direct sales function, are available is 10 years.

- The minimum duration of the guarantee of the refrigerating appliance with a direct sales function offered by the manufacturer, importer or authorised representative is 2 years.

Changing over door hinges

Door hinges should only be changed by a trained expert.

Changing the door hinges must be done by two people.

⚠ WARNING

High door weight.

Danger of injury and damage to property.

Only complete the modification work if you can lift a weight of 25 kg.

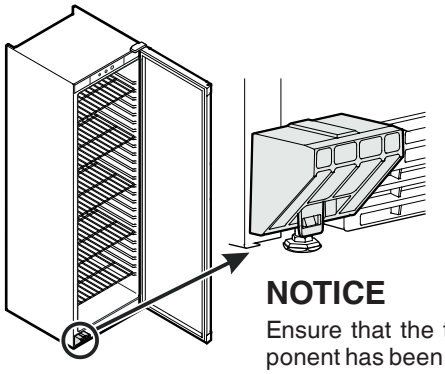

NOTICE

Ensure that the transport safety component has been fixed to the appliance.

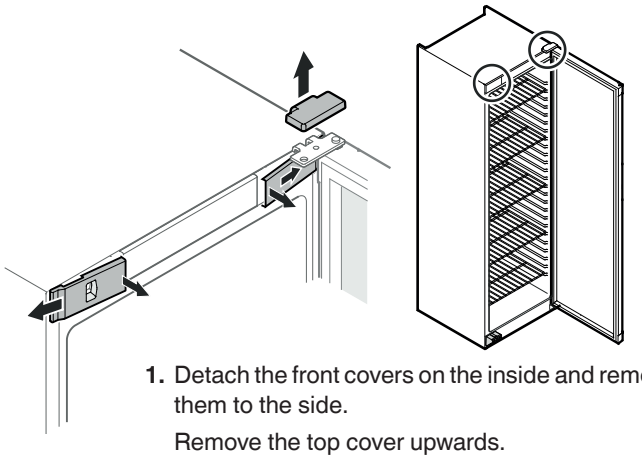

1. Detach the front covers on the inside and remove them to the side.

Remove the top cover upwards.

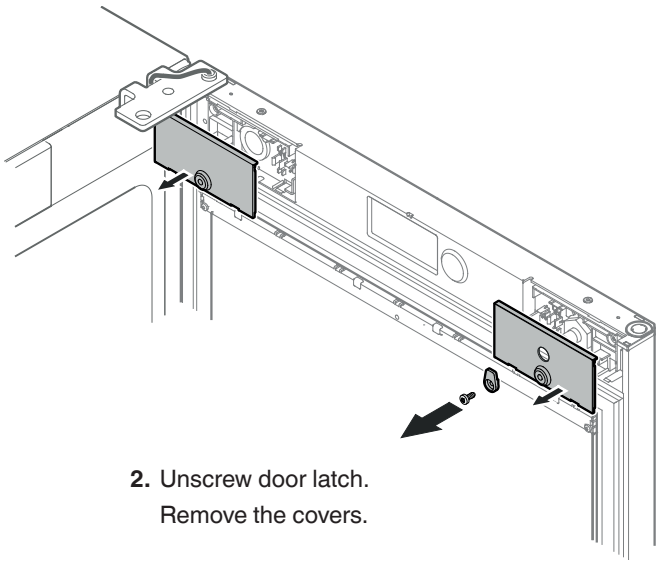

2. Unscrew door latch.

Remove the covers.

3. Release the plug connection from the holder.

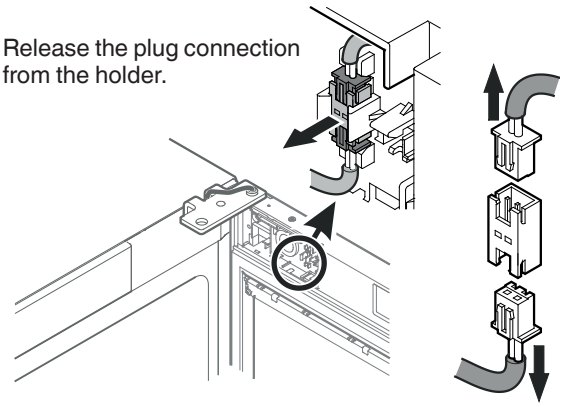

Detach the upper and lower plugs from the plug coupling.

4. Carefully remove the cable by pulling it upwards.

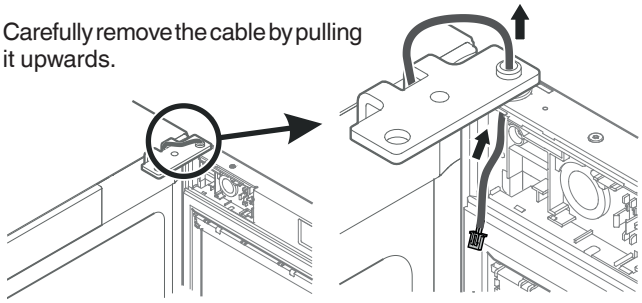

5. Secure the upper plug in the holder.

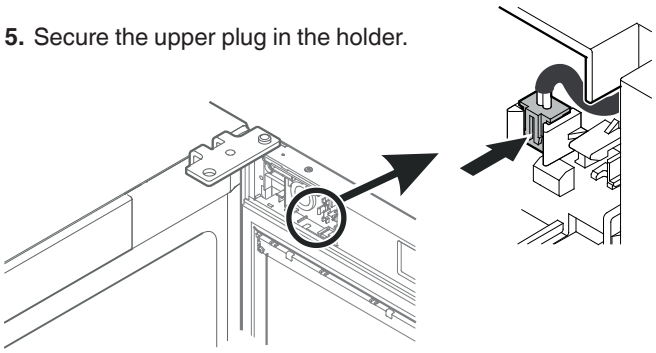

6. Transfer the lock and cover to the opposite side.

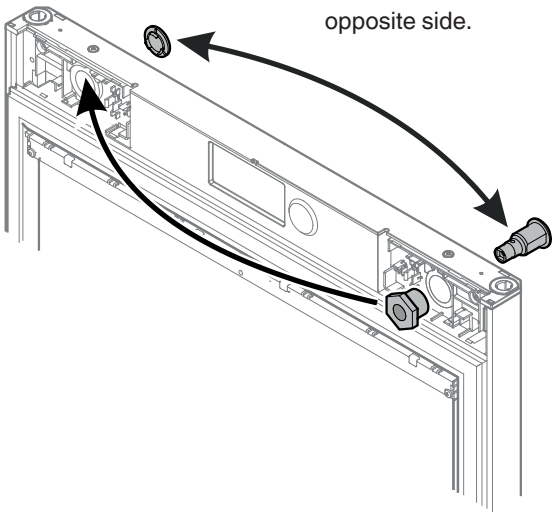

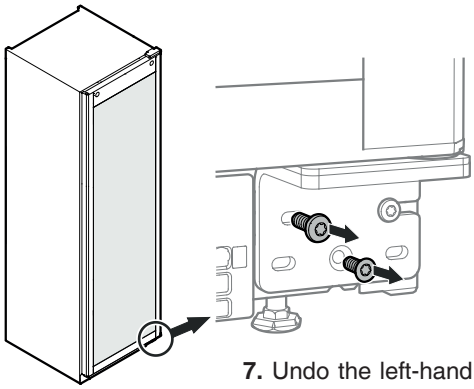

7. Undo the left-hand and the bottom screws.

NOTICE

The door must now be held secure by somebody.

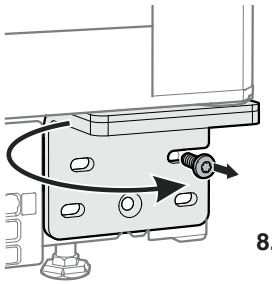

NOTICE

The door mounting has a spring mechanism enabling the door to close by itself.

The hinge bracket turns to the left when the screws are undone.

8. Hold the hinge bracket and remove the right-hand screw.

Turn the hinge bracket to the left and continue to hold it.

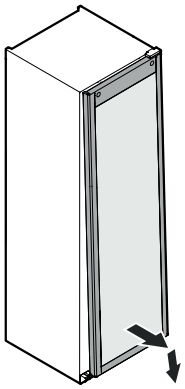

9. Move the bottom of the door forwards and remove it downwards.

Carefully place the door on a soft surface.

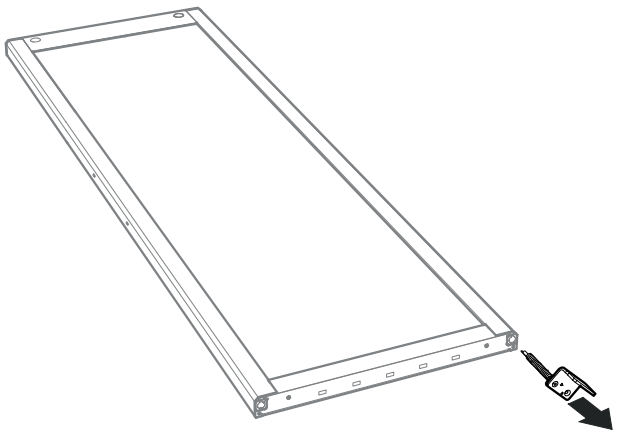

10. Pull out the hinge bracket.

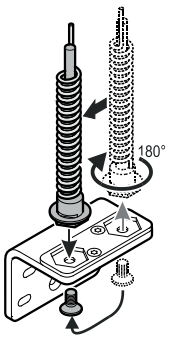

11. Unscrew the hinge pin, turn it through 180° horizontally and insert into the left-hand opening.

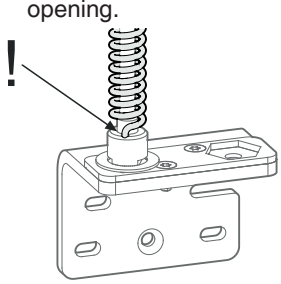

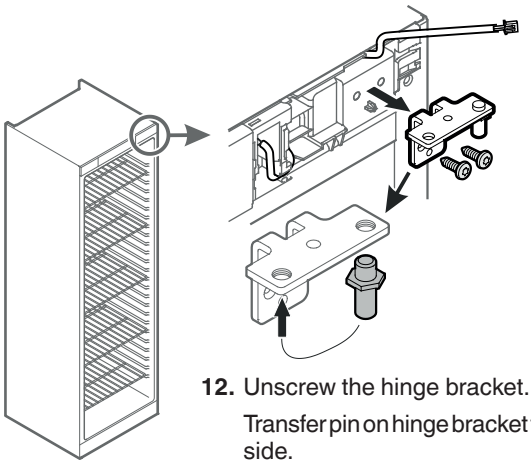

12. Unscrew the hinge bracket.

Transfer pin on hinge bracket to the opposite side.

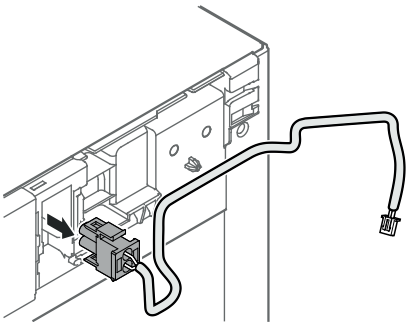

13. Pull out the plug.

Remove the cable.

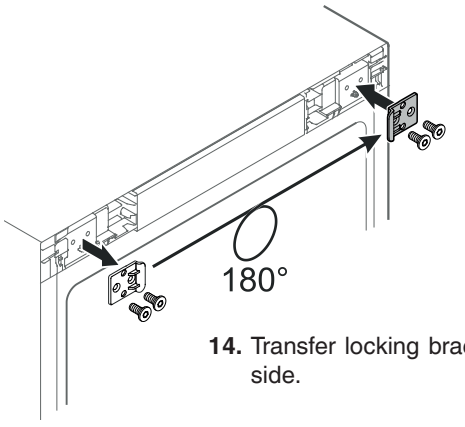

14. Transfer locking bracket to the opposite side.

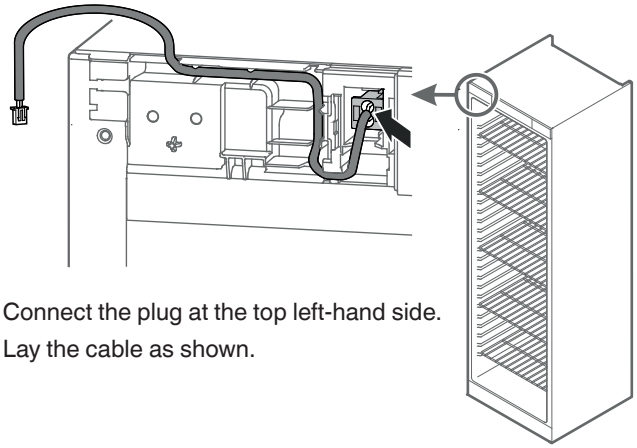

15. Connect the plug at the top left-hand side.

Lay the cable as shown.

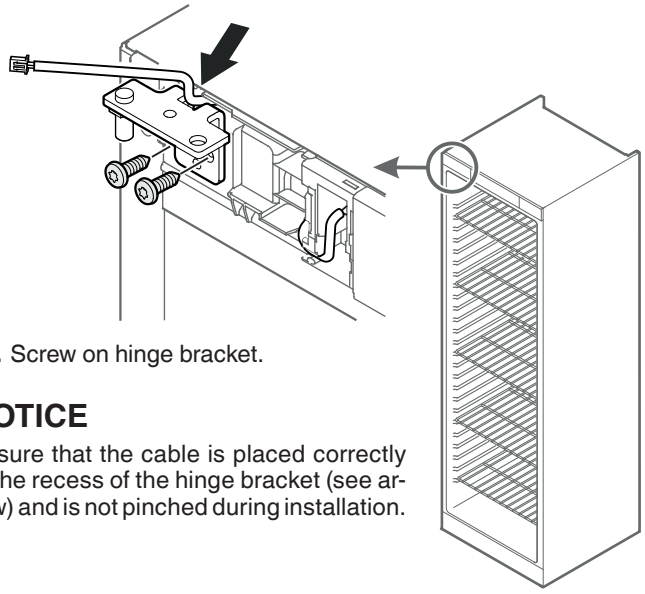

16. Screw on hinge bracket.

NOTICE

Ensure that the cable is placed correctly in the recess of the hinge bracket (see arrow) and is not pinched during installation.

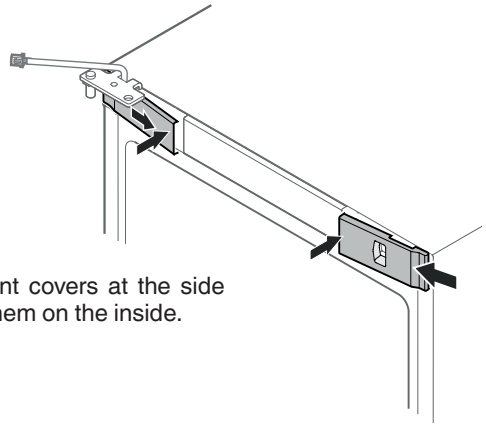

17. Attach the front covers at the side and engage them on the inside.

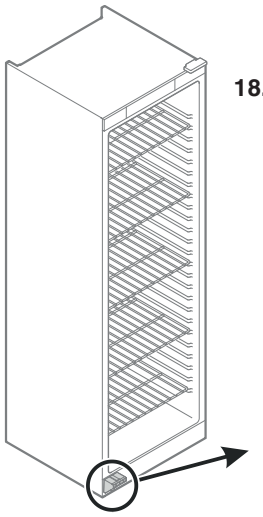

18. Remove the transport safety component.

Pull the lug forwards (1) and remove the transport safety component upwards (2).

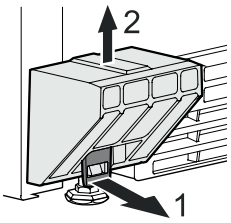

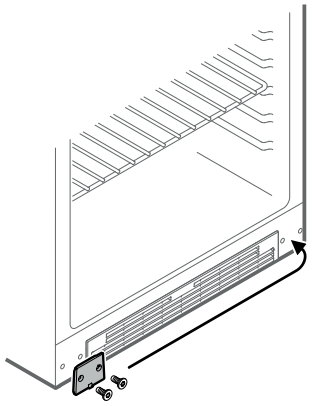

19. Transfer cover plate to the opposite side.

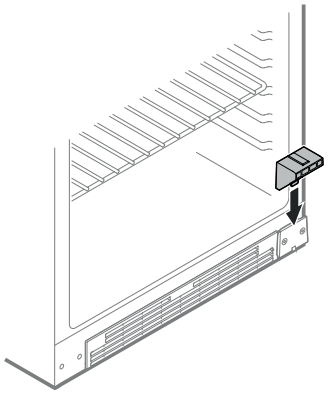

20. Fit the transport safety component.

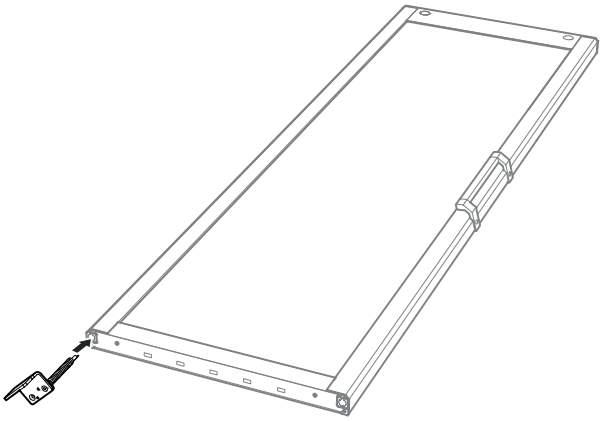

21. Insert the hinge bracket as shown in the illustration and hold it.

Have a second person lift the door off the floor and move it to the appliance.

22. Mount door on hinge pin and close.

NOTICE

The door must now be held secure by somebody.

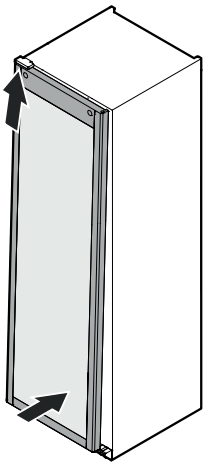

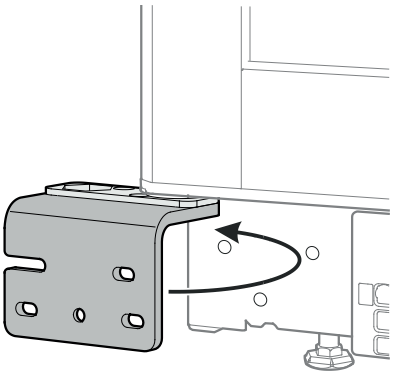

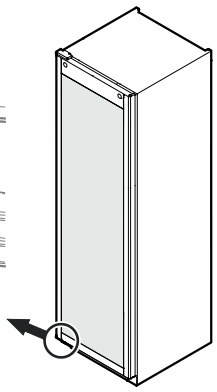

23. Turn the hinge bracket to the right.

This tensions the spring in the closing mechanism.

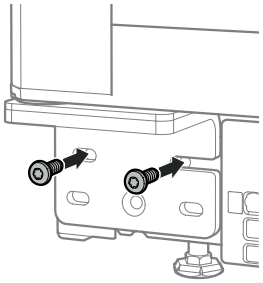

24. Screw on hinge bracket.

Adjusting the lateral tilt of the door

If the door is at an angle, adjust the angle.

25. Undo screws and slide hinge bracket to the right or left.

Tighten screws.

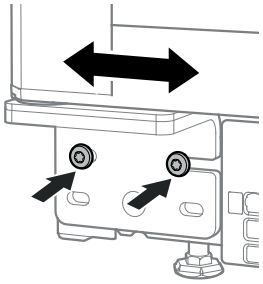

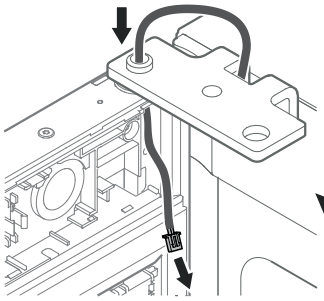

26. Open the door.
Pull the cable through the opening as far as it will go.

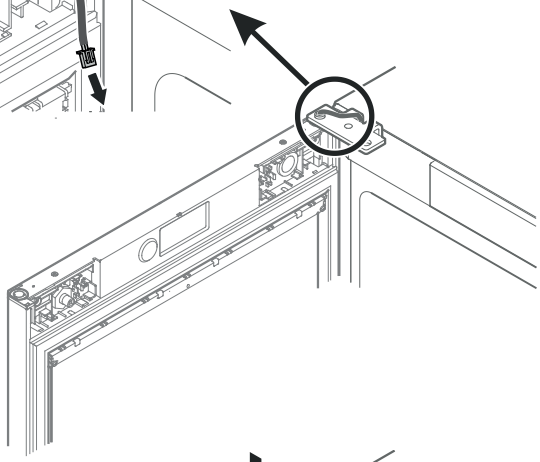

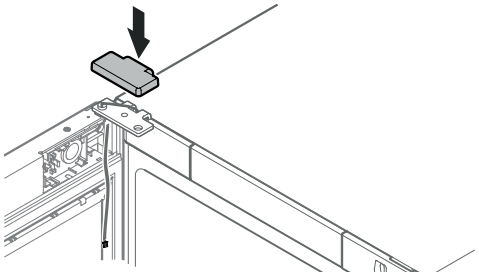

27. Engage the top cover from above.

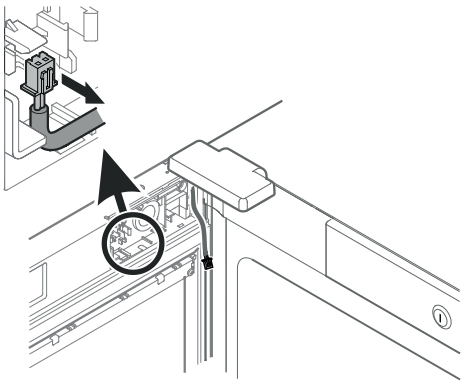

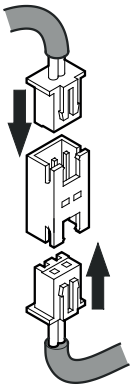

28. Remove the plug from the holder.

Insert both plugs in the plug coupling.

29. Push the plug connection into the holder until it clicks into place. Lay the cable as shown.

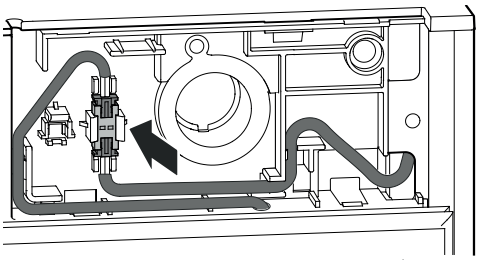

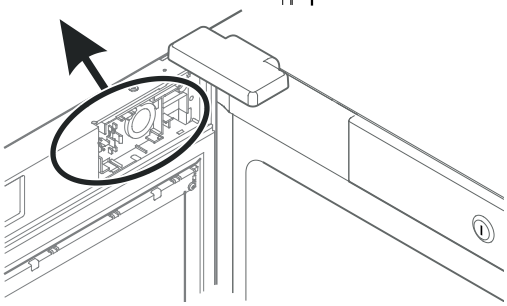

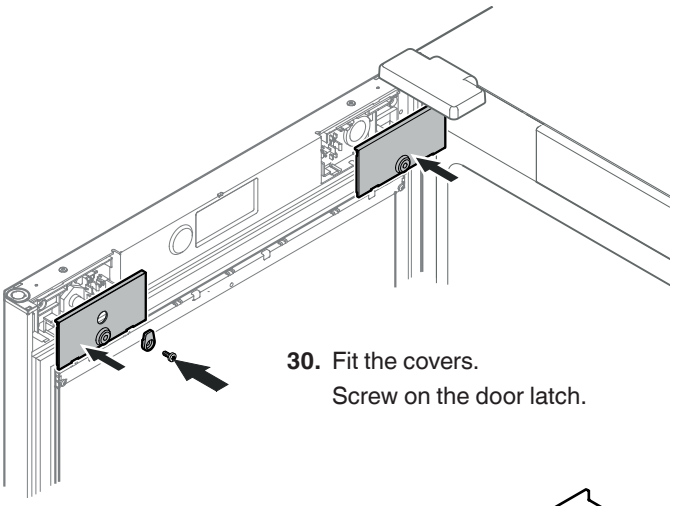

30. Fit the covers.
Screw on the door latch.

31. Remove the transport safety component.

Pull the lug forwards (1) and remove the transport safety component upwards (2).

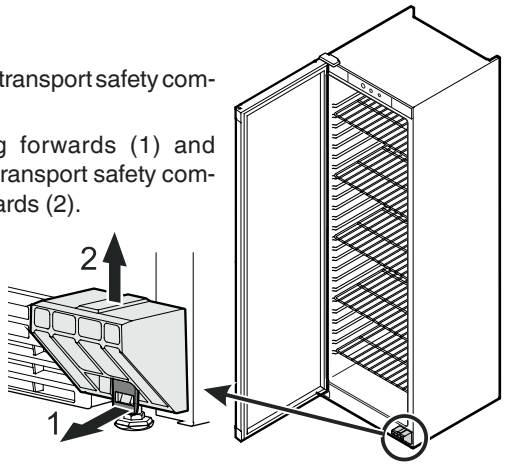

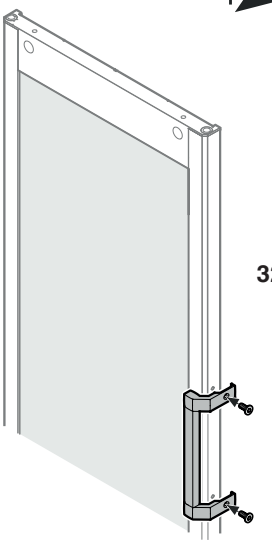

32. Screw on the handle.

The handle and M4x16 screws are supplied in the accessory pack.

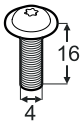

Liebherr-Hausgeräte GmbH
Memminger Straße 77-79
88416 Ochsenhausen
Germany
home.liebherr.com